Vickers®

Flow Controls

Flow Control Valves

FCG-02-1500-(L)(T)-40

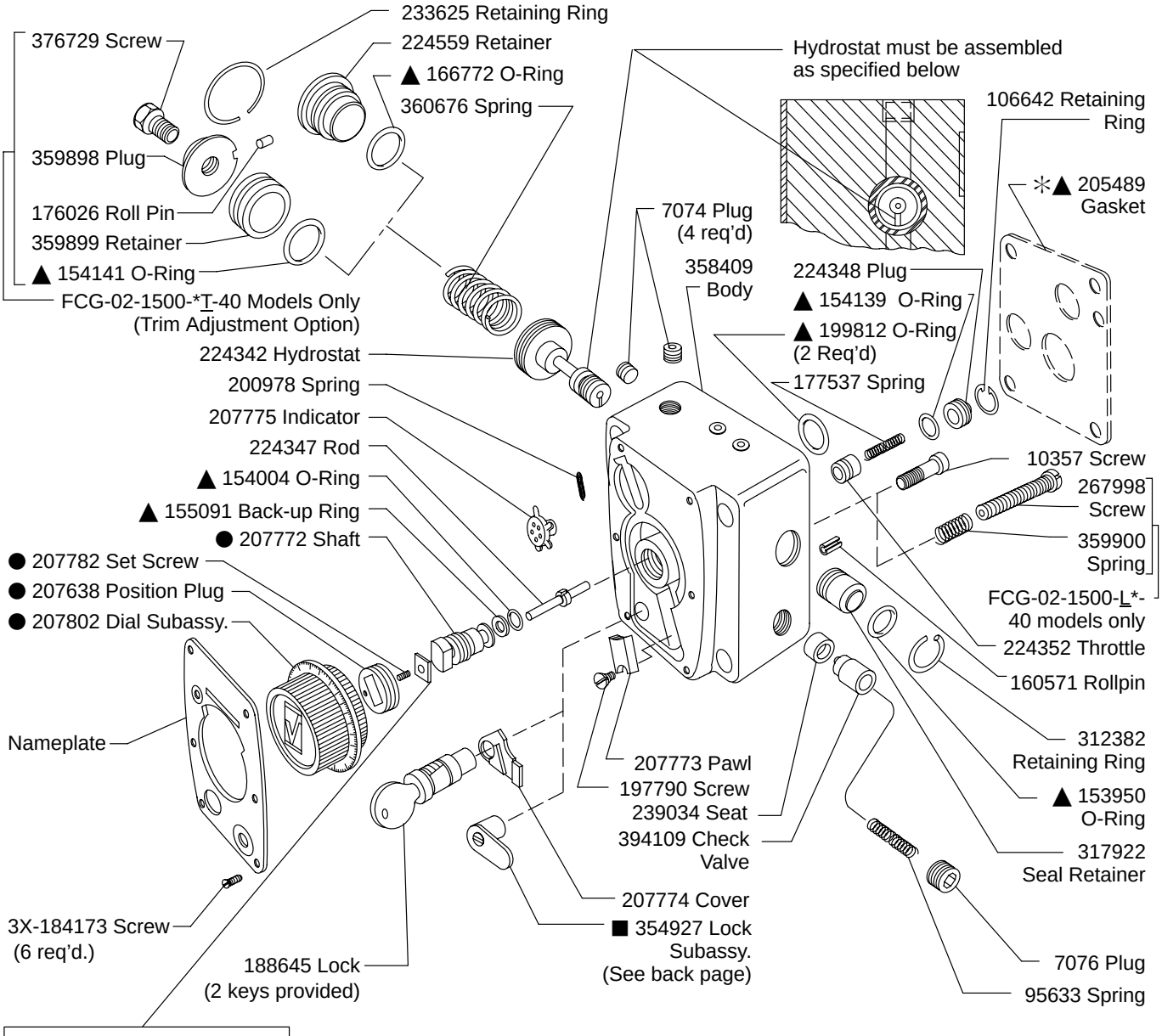

Optional Spacers (Part No. 211026) are available to limit the maximum throttle opening as follows:

Number of Spacers	Approx. limit of maximum volume cu. in. / min.
3	425 to 550
2	825 to 975
1	1175 to 1275

● With 207772 Control Shaft screwed fully in, adjust 207638 Positioning Plug in 207802 Dial so that "O" on dial lines up with pointer on Nameplate when dial is assembled on Shaft. Lock securely with 207782 Set Screw.

▲ Included in 919286 Seal Kit

Equivalent F3 Seal Kit 919285

✳▲ 205489 Gasket Important

This gasket is for use only when this valve replaces a valve with a drain connection. Otherwise, discard gasket before mounting valve.

Hydrostat must be assembled with notch in small end parallel to mounting face pointing downward.

Model Code

FCG - 02 - 1500 - (L) (T) - 40

1 2 3 4 5 6

1 Model Series

FCG - Flow control, check valve, gasket mounted

2 Size

Nominal 1/4 in. NPT

3 Flow

5 to 1500 cu. in./min.

4 Tamperproof Lock Option

Omit for standard key lock

5 Trim Adjustment Option

Omit for Standard Models

Design

Tamperproof lock option
Models FCG-02-1500-L*-40 only

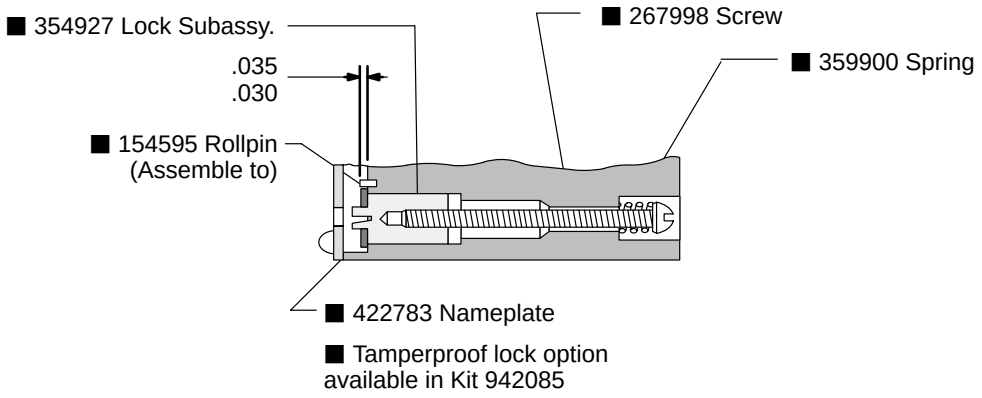

For satisfactory service life of these components, use full flow filtration to provide fluid which meets ISO cleanliness code 20/18/15 or cleaner. Selections from Eaton OFP,OFR and OFRS filter series are recommended.

Printed in U.S.A.