Flow Control Valves

F(C)G-02-300--50**
F(C)G-02-1500--50**
F(C)G-02-2300--50**

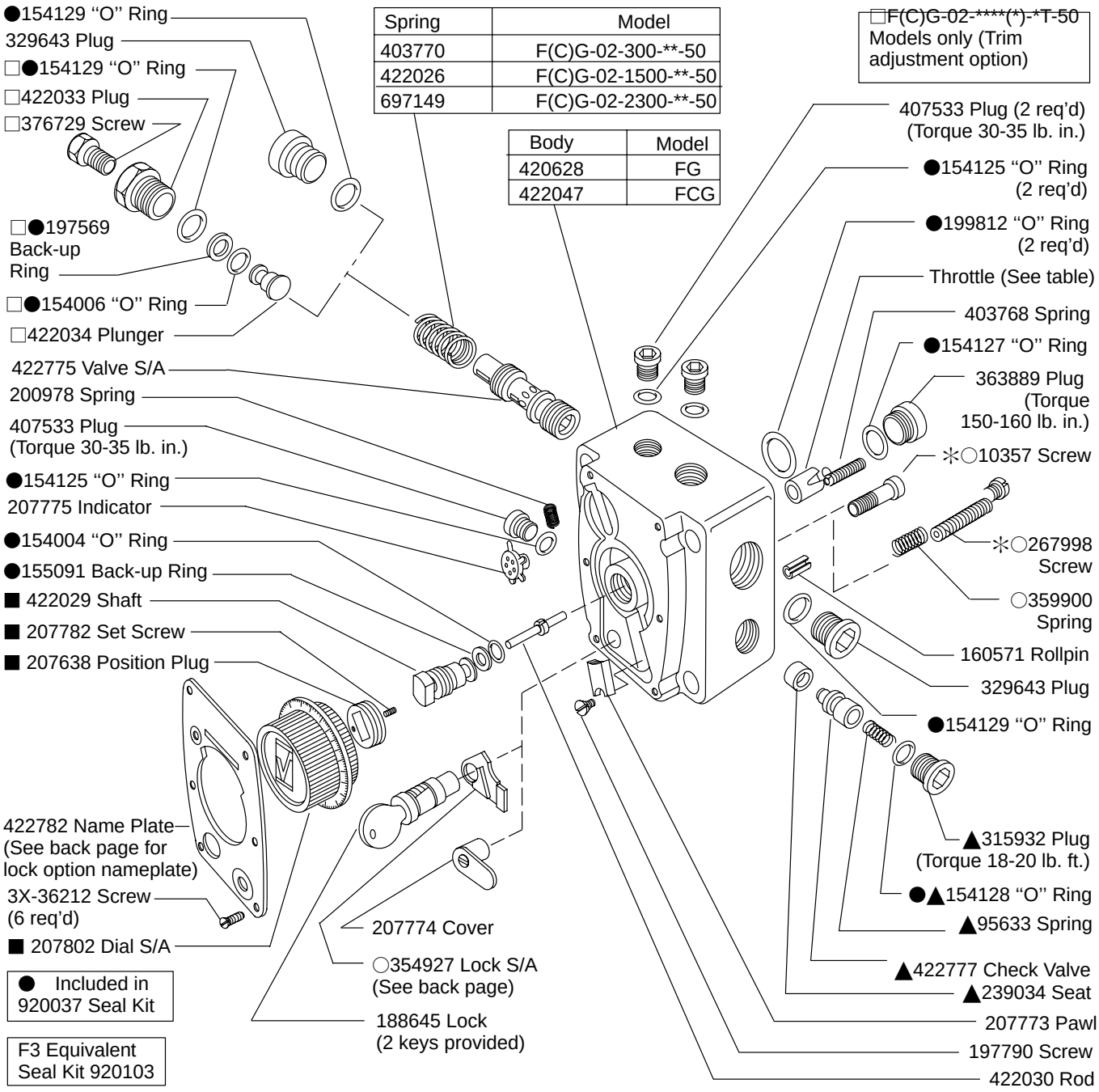

Spring	Model
403770	F(C)G-02-300-**-50
422026	F(C)G-02-1500-**-50
697149	F(C)G-02-2300-**-50

Body	Model
420628	FG
422047	FCG

● Included in 920037 Seal Kit

F3 Equivalent Seal Kit 920103

■ With 422029 Control Shaft screwed fully in, adjust 207638 Positioning Plug in 297802 dial so that "O" on dial lines up with pointer on nameplate when dial is assembled on shaft. Lock securely with 207782 set screw.

▲Used on FCG models only.

✳Coat threads with sealant. Tighten to locking position then back off 1/4 turn.

Throttle	Model
422027	F(C)G-02-300-**-50
422028	F(C)G-02-1500-**-50
853593	F(C)G-02-2300-**-50

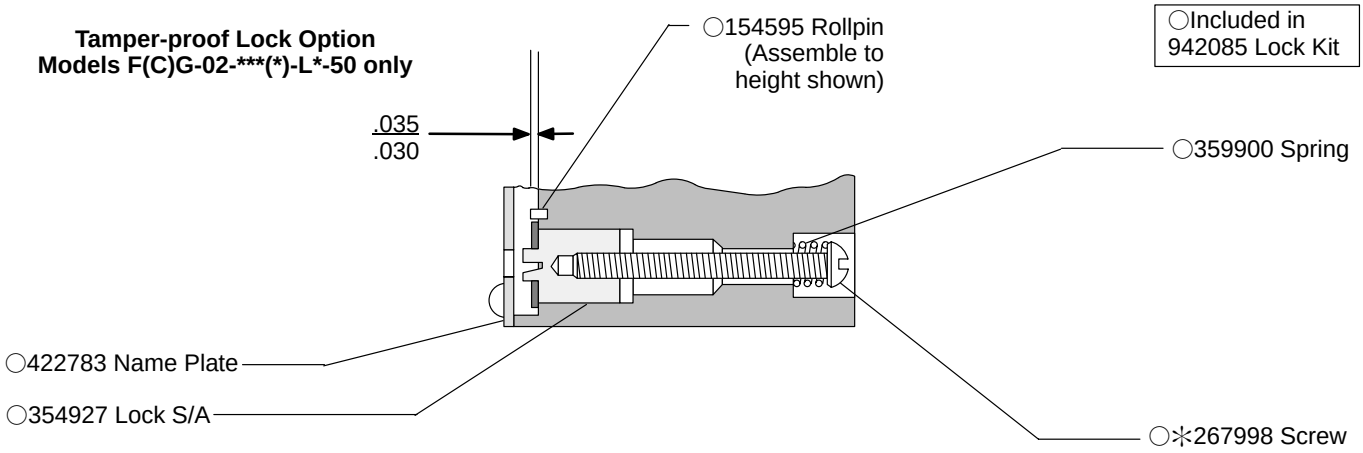

Model Code

FCG - 02 - *(*) - (L) (T) - 50**

1 2 3 4 5 6

1 Model Series

FCG - Flow control, check valve, gasket mounted

2 Nominal Size

02 - 1/4 in. NPT

3 Flow Capacity

300 - 300 cu. in./min.
1500 - 1500 cu. in./min.
2300 - 2300 cu. in./min.

4 Options

L - Tamperproof lock option
(Omit for standard key lock)

5 Options

T - Trim adjustment option
(Omit for standard models)

6 Design

For satisfactory service life of these components, use full flow filtration to provide fluid which meets ISO cleanliness code 18/15 or cleaner. Selections from Eaton OFP,OFR and OFRS filter series are recommended.

Printed in U.S.A.