Pilot Operated Directional Control Valves

DG5S4-10-53**
DG5S4-10-80**
DG5S4 -10 -90**
DG5S4 -10 -100**
NFPA D10, ISO-4401-10

DG4S4-01-50 Air Gap Pilot Valve
DG4S4-01-60 Wet Armature Pilot Valve
DG4V-3S-60 Pilot Valve
DG4V-3-60 Pilot Valve, High Performance

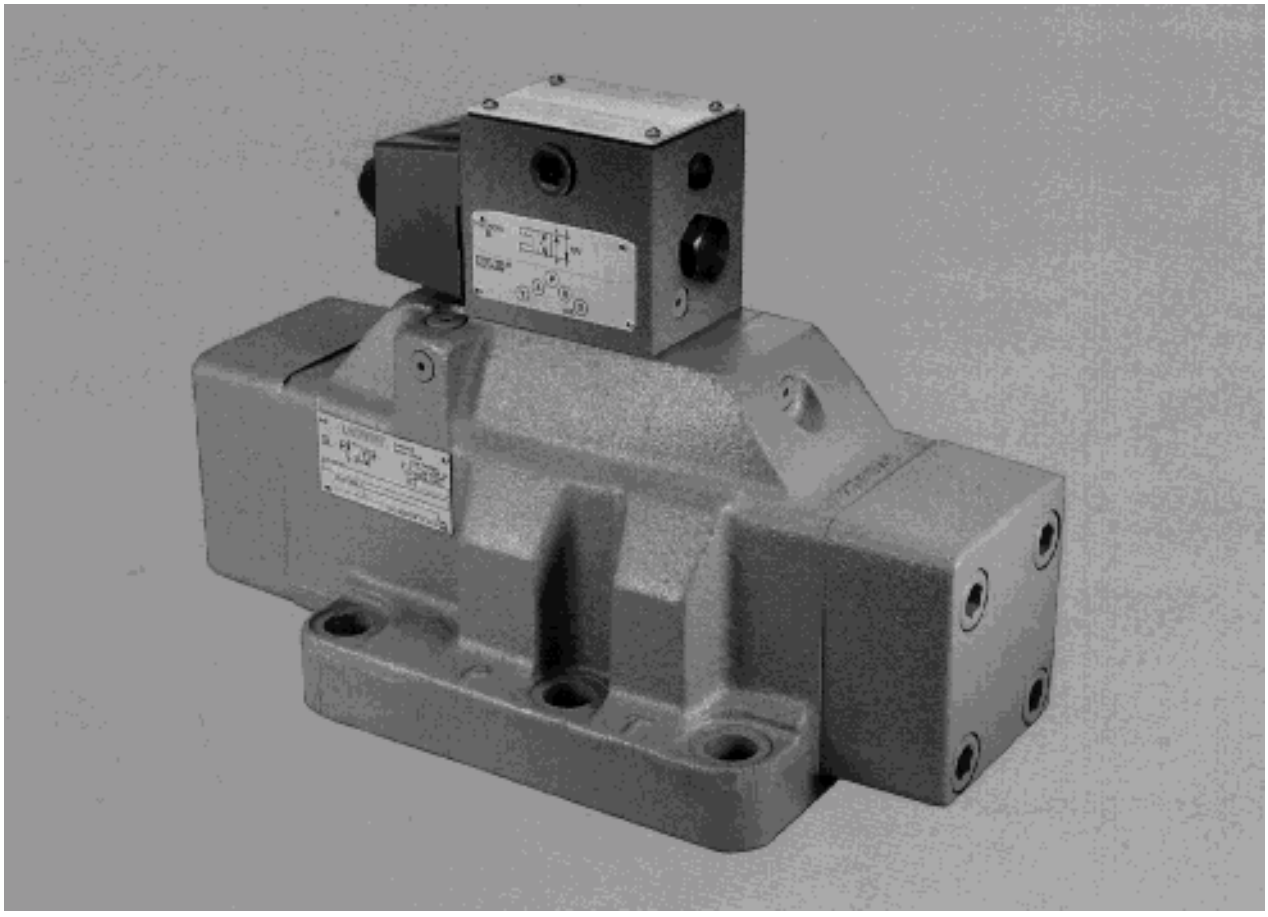

Table of Contents

Introduction 3
- Features and Benefits
- Functional Symbols
- Minimum Pilot Pressure

General Information 4
- Basic Characteristics
- Mounting Interface
- Shifting Action
- Mounting Position
- Installation Data
- Optional Features
- Service Information

DG5S4-10-53/80 Model Code 5

DG5S4-10-53/80 Pressure Drop 6

Flow Ratings 7

DG5S4-10-80 Installation Dimensions 8

DG5S4-10-80 Electrical Information 10

DG5S4-10-53 Air Gap Pilot Options 15

DG5S4-10-90/100 Model Code 16

DG5S4-10-90/100 Installation Dimensions 18

DG5S4-10-90/100 Electrical Informations 19

DG5S4-10-90/100 Optional Features 22

Subplate 23

Application Data 24

Introduction

General Description

These valves are generally used to control the direction of flow in a hydraulic circuit. This, in turn, would control the direction of movement of a hydraulic cylinder, or the rotation of a fluid motor.

- DG5S4-10**- 90 uses a DG4V-3S-60 standard D03 pilot valve 100 bar (1450 psi).
- DG5S4-10**- 100 uses a DG4V-3-60 high performance D03 pilot valve 207 bar (3000 psi).
- DG5S4-10**- 53 uses a DG5S4-01-50 air gap pilot valve.
- DG5S4-10**- 80 uses a DG5S4-01-60 wet armature pilot valve 69 bar (1000 psi).
- XDG5S4-10**-5* Hazardous Duty.

Features and Benefits

- Suitable for the most demanding industrial applications with flow capacities up to 946 l/min (250 USgpm) and rated pressure of 207 bar (3000 psi).
- Available with a wide variety of spool and spring arrangements, stroke and pilot choke adjustments, integral check valves, and port orifices.
- Solid cast body and core passages for maximum strength and minimal pressure drop.
- Designed and backed by Vickers, with over 70 years as the global leader in fluid power and motion control.

Functional Symbols

Double Solenoid - Spring centered, all spools

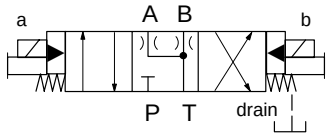

Double Solenoid - No-spring, 0, 2, 6, 9 spools

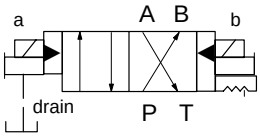

Double Solenoid - Pressure centered, all spools

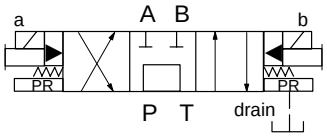

Single Solenoid - Shift to center, all spools

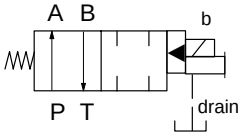

Single Solenoid - Spring offset, 0, 2, 6, 9 spools

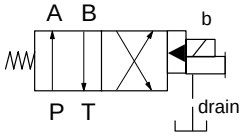

Single Solenoid - Spring centered, all spools

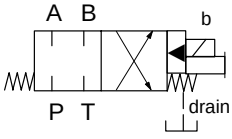

Minimum Pilot Pressure

		Shifting P to A bar (psi)		Shifting P to B bar (psi)	
Spool Type	Flow l/min (USgpm)	Pressure Centered Models●	All Other Models	Pressure Centered Models●	All Other Models
All Spools	0	5,2 (75)	5,2 (75)	13,8 (200)	5,2 (75)
0, 4, 8 & 9	946 (250)	5,2 (75)	5,2 (75)	13,8 (200)	5,2 (75)
2, 3, 6 & 33	946 (250)	10,3 (150)	10,3 (150)	27,6 (400)	10,3 (150)

● On pressure centered models end covers cannot be interchanged. Pilot pressure is not available through use of integral check valves.

General Information

DG5S4-10-** Pilot Operated Directional Valves**

Basic Characteristics

Max. pressure: 207 bar (3000 psi)
Max. flow: 946 l/min (250 USgpm)
Max. pressure port T (external drain):
. . . . . 207 bar (3000 psi)
Max. pressure port T (internal drain):
DG5S4-10**-53 – 69 bar (1000 psi)
DG5S4-10**-80 – 69 bar (1000 psi)
DG5S4-10**-90 – 100 bar (1450 psi)
DG5S4-10**-100 – 207 bar (3000 psi)
Max. pilot pressure:
. . . . . 207 bar (3000 psi)
Weights: - See installation drawings.

Click here for Fluid Cleanliness information.

Mounting Interface

ISO 4401-10
NFPA D10

Shifting Action

Spring centered, pressure centered and spring offset models must be energized continuously to maintain the shifted position. Detented no-spring models may be energized momentarily (approximately 0.1 second).

Pressure centered and spring centered models return valve spool to center position when solenoids are de-energized.

Spring offset models return spool to offset position by pilot pressure when solenoid is de-energized.

When no-spring detented models are de-energized, the pilot and main spools remain in the last position attained, provided there is no shock, vibration, unusual pressure transients and the spool axis is horizontal. If pilot pressure fails or falls below the minimum, the main spool will spring center (at spring centered flow rates) and cannot drift to reversal of flow (pilot stage remains in detented position).

Caution

Because of this, flow conditions of the spring centered position must be selected with care, both for the effect on the direction of the flow, and the pilot pressure. (The “9” main spool will not ensure sufficient pilot pressure in the center position.)

Pressure centered models: Valve spool is returned to center position by pilot pressure, when solenoids are de-energized. If pilot pressure fails or falls below the required minimum, the valve spool will spring return to center position. (At spring centered valve flow rates.)

Caution

Surges of oil in a common tank line serving these and other valves can be of sufficient magnitude to cause inadvertent shifting of these valves. This is particularly critical in the no-spring detented type valves. Separate tank lines or a vented manifold with a continuous downward path to tank is necessary.

NOTE

Any sliding spool valve, if held for long periods of time, may stick and not spring return due to fluid residue formation and therefore, should be cycled periodically to prevent this from happening.

When used as other than a normal 4-way valve, consult your Vickers representative.

Mounting Position

No-spring detented valves must be installed with the longitudinal axis horizontal for good machine reliability. The mounting position of spring-offset models is unrestricted provided that the pilot pressure supply is maintained as required. (Spring offset valves do not have a spring in the main spool section.)

Installation Data

Pilot Valve Drain

Internal: To provide maximum flow without malfunction, pilot pressure of internally drained valves must always exceed tank line back pressure by a minimum of 5,2 bar (75 psi) for spool types 0, 4, 8 & 9 and a minimum of 10,3 bar (150 psi) for all other spools.

Internal drain may be used with all valves, however, an integral pressure port check valve (see optional check valve note) is required for valves using an internal pilot source with an open center spool (0, 4, 8 and 9 types) in order to maintain pilot pressure. If an external pilot source is used then an integral check is not required. When internal pilot drain is required, order according to model code. (Pressure centered valves not included.)

External: When the possibility of pressure surges in the tank line exists, externally drained valves are recommended. For externally drained models, the pilot valve drain line must be piped directly to tank through a surge-free line so there will be no back pressure at this drain. (Reference connection “Y”.)

Pressure Centered Drain
(external only)
External pilot drain explanation above applies to “Y” drain port. Pressure centered “W” drain connection must be piped directly to tank through a surge free line so there will be no back pressure at this drain.

Optional Features

- Pressure Centered Valves
- Integral Check Valves
- Fast Response
- Electrical Options

Service Information

Refer to specific Vickers parts drawing for service parts information. A complete parts breakdown is contained in this drawing.
Order by literature number.

DG5S4-10*(A/B/C/F/N)-*-90/100 . . I-3890-S
DG5S4-10*(A/B/C/N)-*-80 . . . . . I-3883-S
DG5S4-10*(A/B/C/N)-*-5* I-3624-S
DG5S4(L)-10*D(X)-*-5* I-3625-S
DG5S4-10**-**DC-5* I-3499-S
XDG5S4-10**-5* I-3501-S

Model Code

D05 Pilot Operated Directional Valves

**** (P)** - DG5S4 L - * - 10 * * * X - * E - T - * - * - U - * - ** - LH - S534**

1 2 3 4 5 6 7 8 9 10 11 12 13 14 15 16 17 18 19 20

1 Special Solenoid Features

X - Solenoids for hazardous locations
XM - Solenoids for mining applications
Blank - Omit if not required.

Note: "X" or "XM" not available on plug-in type valves or with solenoid indicator lights.

2 Electrical Plug-in Options

PB - Insta-plug (male & female receptacle).
PA3 - NFPA 3-pin conduit connector.
PA5 - NFPA 5-pin conduit connector. Use "W" wiring housing in model code with connector.
Blank - Omit if not required.

3 Directional Control Valve

Subplate mounting; solenoid controlled; pilot operated; sliding spool; 4-way flow direction.

4 Solenoid Indicator Lights
(omit if not required)

5 "W" Wiring Housing Option

6 Valve Size

1-$^{1}/_{4}$" valve size NFPA - D10 (ISO-4401-10) mounting interface.

7 Spool Types

0, 1, 2, 3, 4, 6, 8, 9, 11, 31, 33 & 52 (See flow rating and tabulation for description.)

8 Spool/Spring Arrangement

A - Spring offset
B - Spring centered with solenoid "A" removed.
C - Spring centered.
D - Pressure centered.
F - Shift to center from spring offset - single solenoid.
N - No-spring detented (pilot valve only)

9 Pilot Pressure
(required for pressure centered "D" models)

A - 14-69 bar (200-1000 psi)
B - 69-138 bar (1000-2000 psi)
Omit for 138-207 bar (2000-3000 psi)

10 Fast Response
(omit for standard low shock models)

Note: Not available with pressure centered "D" and "DB" models.

11 Main Stage Spool Control Options

1 - Spool stroke length adjustments.
2 - Pilot choke adjustments (DGMFN-5-Y-AW-BW-20) spool shift control.
3 - Pilot choke & stroke adjustments.
7 - Stroke adjustment "A" port end only
8 - Stroke adjustment "B" port end only
2-7 - Pilot choke adjustment & stroke adjustment "A" port end only.
2-8 - Pilot choke adjustment & stroke adjustment "B" port end only.

12 External Pilot Pressure
(omit for internal pilot pressure models)

13 Internal Pilot Drain
(omit for external pilot drain models)

14 Pressure Port Check Valve Option

K - 0,34 bar (5 psi) cracking press.
R - 3,4 bar (50 psi) cracking press.
S - 5,2 bar (75 psi) cracking press.
Blank - Omit if not required

15 Wet Armature Solenoids

W - Wet armature solenoids & non-serviceable core tubes.

16 DIN 43650 Std. Electric Plug

Blank - Omit if not required.

17 Electrical Service

Wet armature solenoids:
B - 115/120 V - 60 Hz & 110 V - 50 Hz
D - 230 V - 60 Hz & 220/230 V - 50 Hz
F - 6 V DC
G - 12 V DC
H - 24 V DC
Air Gap solenoids:
Blank for standard 115V-60 Hz.
Specify non-standard voltages (i.e. 230V-60 Hz, 24V DC, etc.)

18 Design Number

Subject to change.
-53 design uses a DG4S4-01-50 Air Gap pilot.
-80 design uses a DG4S4-01-60 Wet Armature pilot.

19 LH - Left Hand Assembly

Omit for right hand assembly ("b" solenoid used - flow is P to B when "b" solenoid is energized). For single solenoid "A" and "B" models only.

20 Special Feature

S534 Anti-spin feature for type 4&8 spools.

Pressure Drop

Spool Type & Center Position	Description	Pressure Drop bar (psi) @ 473 l/min (125 USgpm)				
		P→A	B→T	P→B	A→T	P→T on Center
“0”	Open center all ports	3,10 (45)	5,03 (73)	3,52 (51)	4,48 (65)	3,79 (55)
“1”	Open center P & A	3,10 (45)	5,72 (83)	3,79 (55)	4,48 (65)	15,2 (220)
“2”	Closed center all ports	3,79 (55)	5,72 (83)	3,79 (55)	5,24 (76)	–
“3”	Closed P & B A open to T	3,79 (55)	5,72 (83)	3,79 (55)	3,31 (48)	–
“4”	Tandem - Closed Crossover	5,52 (80)	10,3 (150)	5,52 (80)	11,7 (170)	5,52 (80)
“6”	Closed center P only	3,79 (55)	5,17 (75)	3,79 (55)	3,17 (46)	–
“8”	Tandem - Open Crossover	4,27 (62)	8,41 (122)	4,34 (63)	9,51 (138)	5,52 (80)
“9”	Open center partial - all ports	3,17 (46)	5,17 (75)	3,45 (50)	4,83 (70)	27,6 (400)
“11”	Open center P & B	3,79 (55)	5,03 (73)	3,52 (51)	5,24 (76)	15,2 (220)
“31”	Closed P & A B open to T	3,79 (55)	3,31 (48)	3,79 (55)	5,72 (83)	–
“33”	Closed center bleed A & B	3,79 (55)	5,72 (83)	3,79 (55)	5,24 (76)	–
“52” 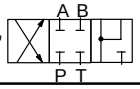	Closed center all ports	3,79 (55)	Contact your Vickers rep-resentative	3,79 (55)	5,24 (76)	–

Note
When solenoid “a” is energized, flow is always P to A. When solenoid “b” is energized, flow is always P to B. This is in accordance with the ANSI-B93.9 standard. Standard spring offset valves are assembled right hand, such that flow is P to A in the spring offset position (solenoid is de-energized). Solenoid “a” and “b” are identified on the diagram plate.

1. Figures in the pressure drop chart give approximate pressure drop (ΔP) when passing 473 l/min (125 USgpm) flow (Q) of 21 cSt (100 SUS) fluid(s) having .865 specific gravity.
2. For any other flow rate (Q_1), the pressure drop (ΔP_1) will be approximately: $\Delta P_1 = \Delta P(Q_1/Q)^2$
3. For any other viscosity(s), the pressure drop (ΔP), will change as follows:

Viscosity cSt (SUS)	14 (75)	32 (150)	43 (200)	54 (250)	65 (300)	76 (350)	86 (400)
% of ΔP (Approx.)	93	111	119	126	132	137	141

4. For any other specific gravity (G1)*, the pressure drop (ΔP_1) will be approximately: $\Delta P_1 = \Delta P(G_1/G)$

** Specific gravity of fluid may be obtained from its producer. The value is higher for fire-resistant fluids than for oil.*

Flow Ratings

Pressure Drop Across Check Valve

Total pressure drop is determined from the pressure drop induced by check valve and other sources. (See graph, pilot pressure and integral valve notes.) Total must be greater than minimum bar/psi for good machine reliability.

To determine check valve cracking pressure needed to provide pilot pressure, calculate total pressure drop through valve (P to T) on center at minimum flow. Total pressure drop is determined from pressure drop chart for standard valve and adding pressure drop induced by check valve (see graph). Total must be greater than the minimum for good machine reliability. (See pilot pressure and integral check valve notes.)

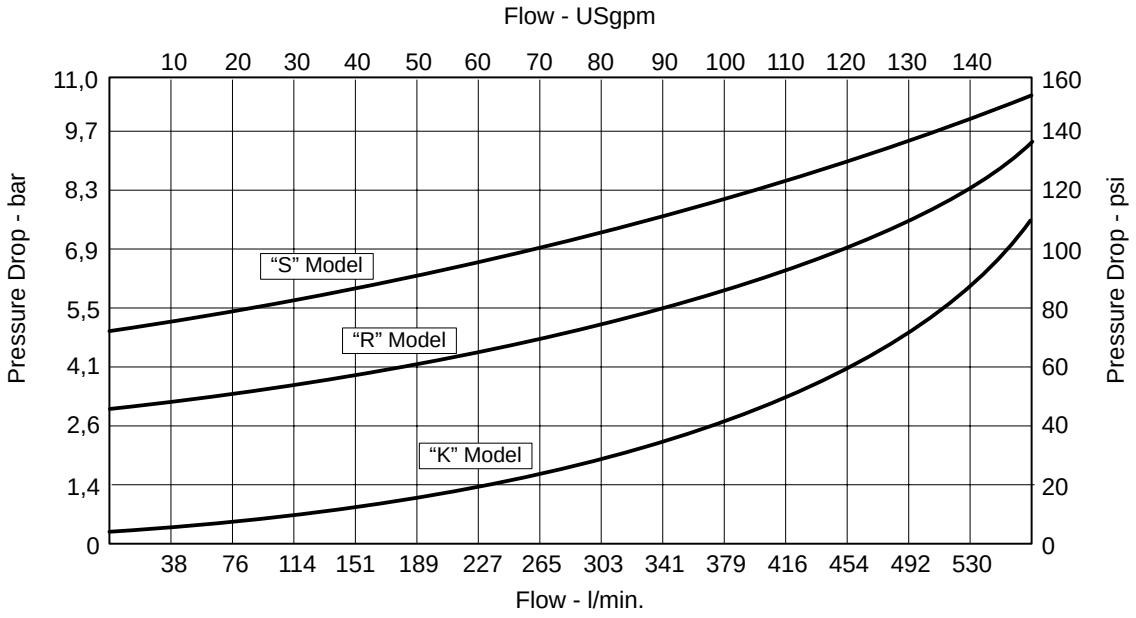

Flow Ratings

Valve Type	Spool Type	Recommended Flow Capacity l/min (USgpm)	Maximum Flow without Malfunction l/min (USgpm) @ bar (psi)
No-spring detented	0, 2, 6 & 9 ▪	473 (125)	946 (250) @ 207 (3000)
Spring centered & Shift to center	0, 4 & 8 †		
	2, 3, 6, 31 & 33 ▪		
	1, 9 & 11	322 (85)	322 (85) @ 207 (3000) 473 (125) @ 138 (2000) 568 (150) @ 69 (1000)
Spring offset	0, 2, 6 & 9 ▪	473 (125)	946 (250) @ 207 (3000)
Pressure centered	1, 0, 2, 3, 4, 6, 8, 9, 11, 31 & 33 ▪		

▪ As system flow increases the minimum pilot pressure required increases. These spools will operate satisfactorily in excess of 946 l/min (250 USgpm) with higher pilot pressures.
NOTE: For the type 52 spool flow recommendations contact your Vickers representative.
† Fast valve switching of large oil volumes, without adequate decompression circuitry, can develop instantaneous flows well above the maximum ratings. The type 8 spool may spin within the body, causing unusual valve body bore wear when applied in this type of circuit. With this and other spool types, valve malfunction might occur. Where these applications exist use the DG5S4-10**-S534 special designator for the 4C and 8C anti-spin spools/spring.

Installation Dimensions

DG5S4-102C-WB-80
Double Solenoid No Spring Detented & Spring Centered Models

Millimeters (inches)
Weight @ 45,4 kg (100 lbs.)

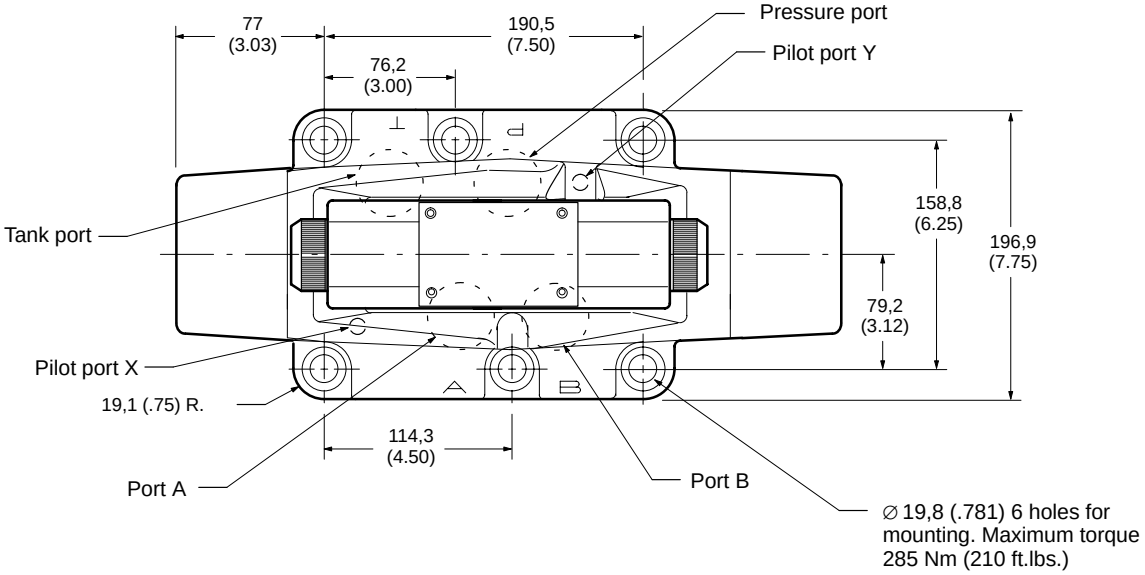

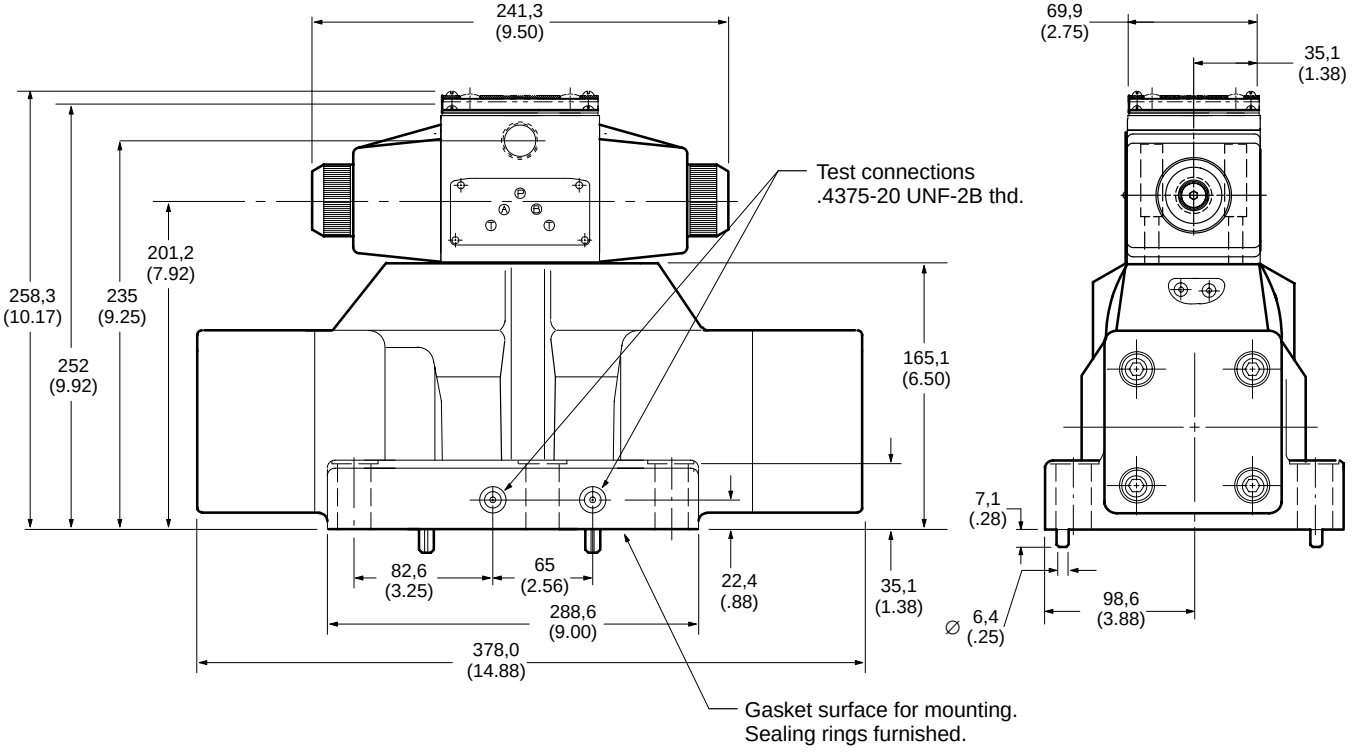

Installation Dimensions

Single Solenoid - Spring Offset, Single Solenoid Spring Centered & Shift to Center Models

Millimeters (inches)

Weight @ 44 kg (97 lbs.)

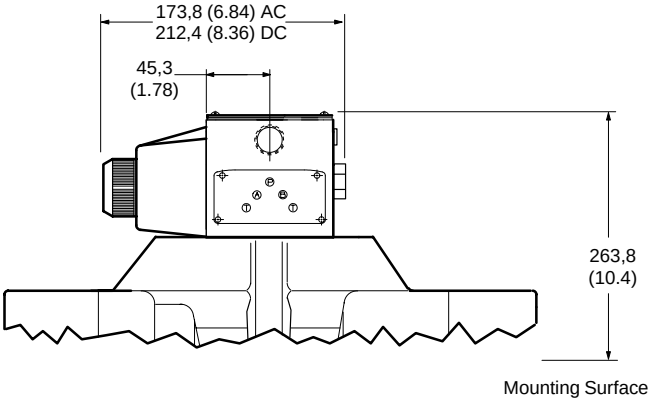

DG5S4–10*D

Pressure Centered Pilot Operated Models

This option provides faster spring centering time by using pilot pressure to center the spool. The centering springs are used in addition to pilot pressure to insure positive centering of the spool. The valve spool is returned to center position by pilot pressure and centering springs. If pilot pressure fails or falls below the required minimum, the spool will return to center position at minimum pilot pressure flow rates for pressure centered valves.

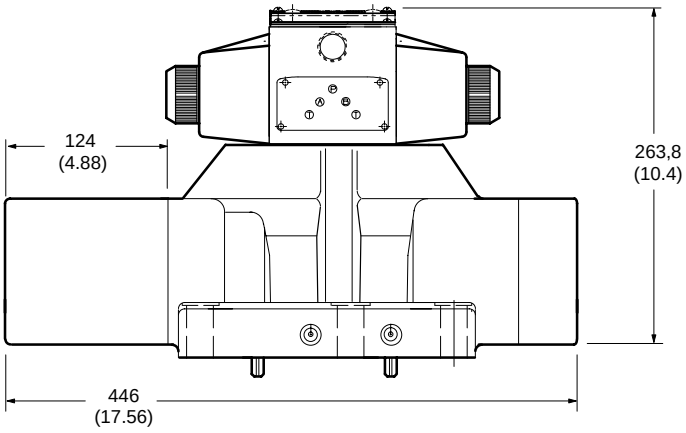

DGMFN-5-Y-A1W-B1W-30 Pilot Choke

Pilot choke is adjusted by backing off locknuts and turning adjusting screws inward (clockwise) to decrease rate of spool travel and outward (counterclockwise) to increase the rate. Pilot oil for models with this feature should be taken from a source having a constant pressure. See spool control modifications in model code.

Stroke Adjustments

Stroke adjustment limits movement of the main stage spool. Backing off the jam nut and turning the adjusting screw inward (clockwise) decreases spool stroke. See spool control modifications in model code.

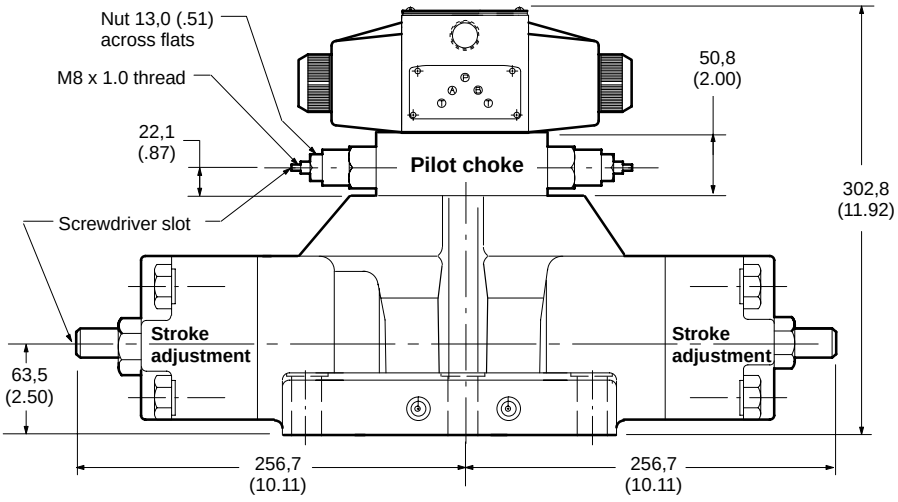

Electrical Information

Solenoid Energizing

When solenoid “A” is energized, flow is always P to A. When solenoid “B” is energized, flow is always P to B. This is in accordance with the ANSI-B93.9 standard. Spring offset valves as shown (not LH) port P to A in the offset position. Solenoids “A” and “B” are identified on the diagram plate on the side of the pilot valve.

Click here for information on DG4V3-60 (M in model code) optional pilot.

Wet Armature Type Solenoids (Standard)

DG5S4-102A-W-**B**-5* - (DG4S4-01 pilot)

Solenoid Energizing

Solenoid Identification Letter	Solenoid Voltage Rating	Inrush Amps (rms)	Holding Amps (rms)	Holding Watts
B	120V AC 60 Hz	3.80	0.69	35
	110V AC 50 Hz	4.10	0.85	33
D	240V AC 60 Hz	2.10	0.34	36
	220V AC 50 Hz	2.30	0.45	34
ED	240V AC 50 Hz	1.85	0.27	28
A	110V AC 50 Hz	3.80	0.63	29
C	220V AC 50 Hz	2.00	0.30	28
G	12V DC	–	3.67	44
H	24V DC		1.83	44
J	48V DC		0.92	44
X	250V DC		0.17	44
DP	125V DC		0.35	44

Solenoid Current

115V-60 Hz solenoids are standard. Specify in model number if other than 115V-60 Hz service is desired. See model code.

Solenoid Current Approximate Maximum	Inrush Amps*	Holding Amps	Holding Watts
115V AC - 60 Hz	5.1	.61	–
115V AC - 50/60 Hz	(50) 3.25 - 60 4.97	(50) .56 - 60 .59	–
230V AC - 60 Hz	2.55	.32	–
460V AC - 60 Hz	1.27	.16	–
6V DC	–	–	24
12V DC	–	–	24
24V DC	–	–	24

Electrical Information

NFPA Hydraulic Valve Electrical Connector

The receptacle is a standard three or five pole electrical connector with shortened leads and terminals added.

The five pole plug has four leads 101,6 (4.0) long and one 177,8 (7.0) long. The three pole plug has two leads 101,6 (4.0) long and one 177,8 (7.0) long.

All of the wires have Underwriters recognized non-solder insulated eyelet terminals. The #4 and #2 leads are attached to the “A” solenoid and the #5 and #1 leads are attached to the “B” solenoid. The green wire is used for the ground connection (#8 screw is furnished).

Electrical Connector Plug

Millimeters (inches)

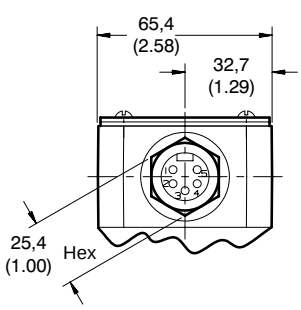

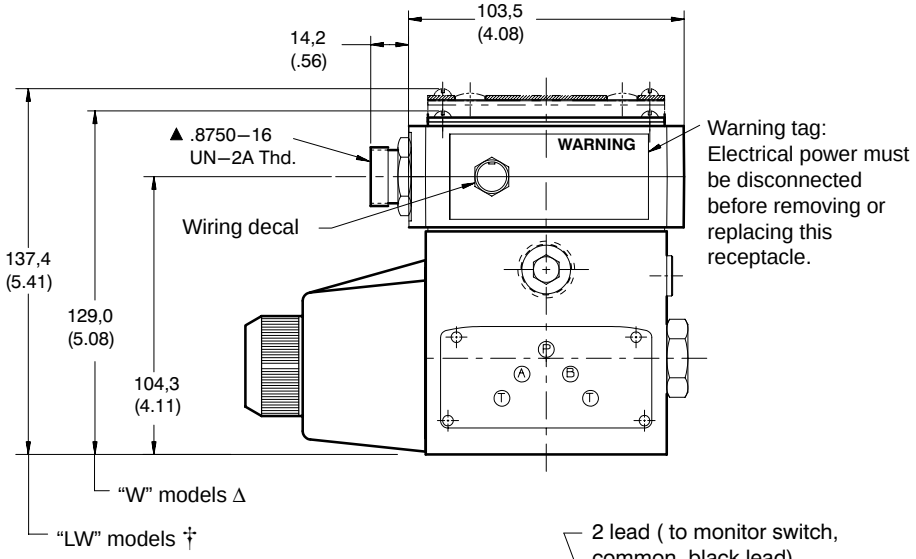

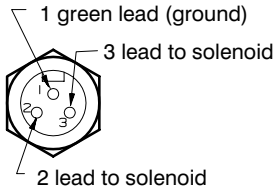

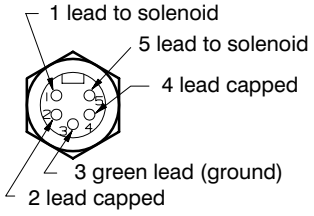

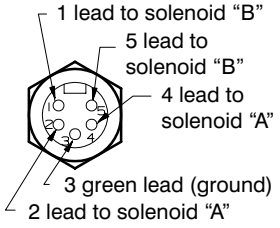

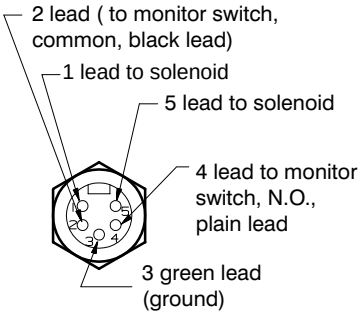

PA3DG4S*W/LW–01–*–5***

A models
C models
F models

PA5DG4S*W/LW–01–*–5***

A models
C models
F models

PA5DG4S4W/LW–01–*–5***

C models
N models

SPA5DG4S4W/LW–01–*–5***

A models only

▲ Electrical connection is over solenoid on single solenoid models, and over “b” solenoid on dual solenoid models. See diagram plate for “b” solenoid location.

Electrical rating 600 volts, 3 pole, 10 amps and 5 pole, 8 amps. The female portable plug to be furnished by customer.

Electrical Information

DIN Standard 43650
Plug-in Coils

Plug connector
(Order separately)
(ISO4400/DIN 43650)

Cable diameter range . . .	Ø6–10 mm (0.24–0.40)
Wire section range	Ø,5–1,5 mm^2 (0.0008–0.0023 in^2)
Terminals	Screw type
Type of protection	IEC144 class IP65, when plugs are fitted correctly to the valves with the interface seals (supplied with plugs) in place.

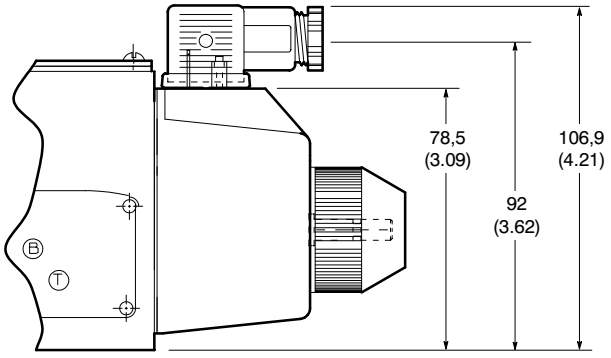

Connector can be positioned at 90° intervals on valve by re-assembling contact holder into appropriate position inside connector housing.

Connectors with and without indicator lights are available (Order separately):

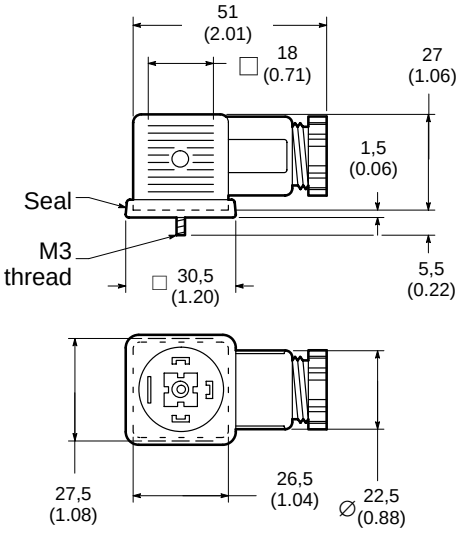

Receptacle	Voltage (AC or DC)	Gray – "A" sol.	Black – "B" sol.
Without lights	——	710776	710775
With lights	12-24	977467	977466
	100-125	977469	977468
	200-240	977471	977470

Electrical Information

Electrical Accessories & Options

Wiring Housing - Lights for DG4S4-01-60 Valves
The electrical accessories options are available on the basic DG4S4-01-* directional control and all valves that use the DG4S4-01* as pilot valve. An electrical wiring diagram is provided on the bottom of the nameplate, and shown below, for installation instructions.

Lights (L)
Lights are “on” when there is voltage across the solenoids. (Only double lights are available.) Lights are available with most options. (The light option has an integral terminal strip) and are for use with 100 through 125 and 192 through 233 volt service solenoids only. They are not available for hazardous duty type models.

Wiring Housing (W)
The wiring housing (W) is a 39,6 (1.56) high riser block mounted on top of the pilot valve. A 1/2” NPTF thread connection is provided in one end of the housing. The housing can be rotated 180° if the connection is required on the opposite end. This connection will readily accept common electrical quick disconnect assemblies on the market. The wiring housing is available with most options.

Grounding
A drilled hole is provided for a #8 self tapping screw which will permit a ground wire to be secured to the pilot valve body.

Wiring housing “W” has a cast hole 1 (see below) which also permits securing a ground wire with customer’s #8 self tapping screw. Units can be series grounded if desired. The DG4S4-01 pilot valve bodies have a cast “ground” symbol adjacent to the drilled hole.

NOTE
Electrical accessories shown are not available with hazardous duty type models identified by model prefix “X” or “XM”.

Electrical Diagram

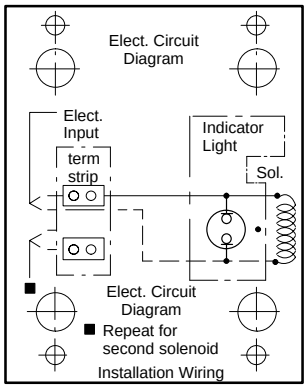

Lights & Wiring Housing W, LW Models

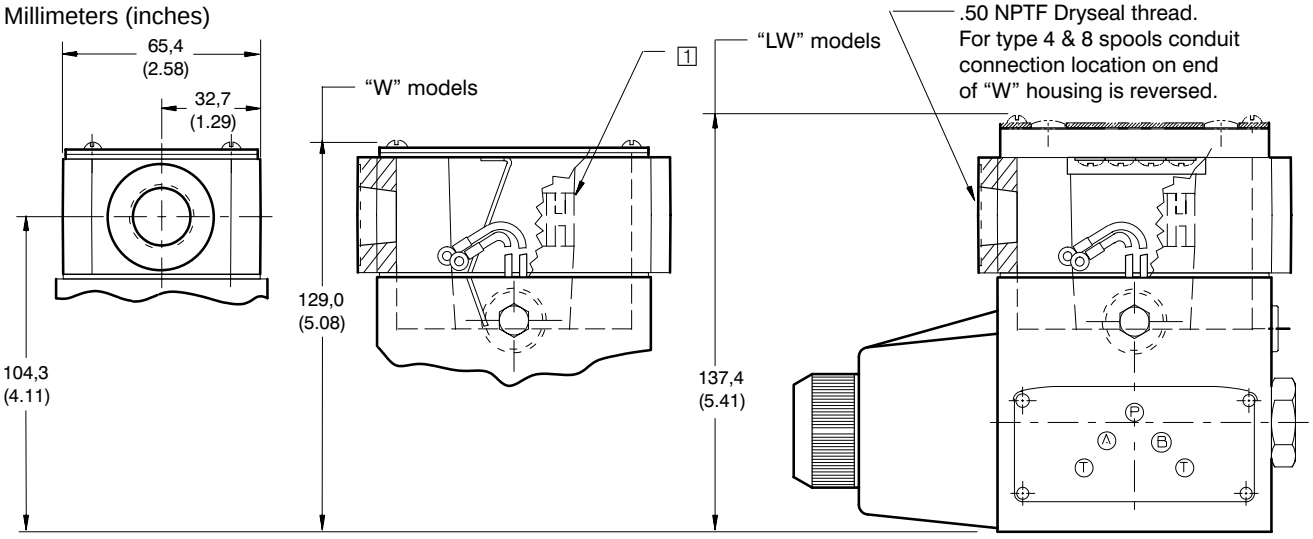

† Receptacle will be prewired directly to the terminals on the solenoid indicator light package.
(For exception see note “★”).

∆ Receptacle will be prewired to the solenoid eyelets. The connection will be made via No. 6 screws and nuts insulated with black electrical tape.
(For exception see note “★”).

★ *For models with monitor switch, wires to be supplied and connected by customer.*

Electrical Information

Insta-Plug Option

The insta-plug consists of the following features:

Section “A”, a four–pronged self aligning electrical plug secured in a housing that is mounted on top center of the valve body where the solenoid leads terminate; or:

A “B” complete insta–plug assembly that includes the “A” housing on top of which rests a similar housing containing the mating receptacle. The two housings are keyed to assure proper hook–up.

The top housing is removed from the lower (“A”) housing to break the electrical connections to the valve solenoids, or pressed onto the “A” housing to complete the circuit. The assembly is held together by two slotted thumb screws.

The top housing is removed form the lower “A” housing to break the electrical connections to the valve solenoids or pressed onto the “A” housing to complete the circuit. The assembly is held together by two slotted thumb screws.

A nameplate and solenoid indicator lights are part of the receptacle when specified.

Connections to the electric power are made through the end of the receptacle housing and can be pre-wired by the customer. End location of electrical conduit port permits space–saving side-by-side valve mounting.

Wire leads approximately 177.8 mm (7.00”) long are provided when no lights are specified. Models with lights have terminals inside the receptacle housing.

After initial installation, electrical and hydraulic connections need not be disturbed when valve with insta–plug is removed.

NOTE

Solenoids “A” and “B” are identified on the plug-in and receptacle housing; they correspond with solenoid identification plate. In case of tandem valves (#8 spool and LH models), the insta-plug is rotated 180° and conduit connection is on the opposite end.

Lights & Wiring Housing Insta-Plug

Millimeters (inches)

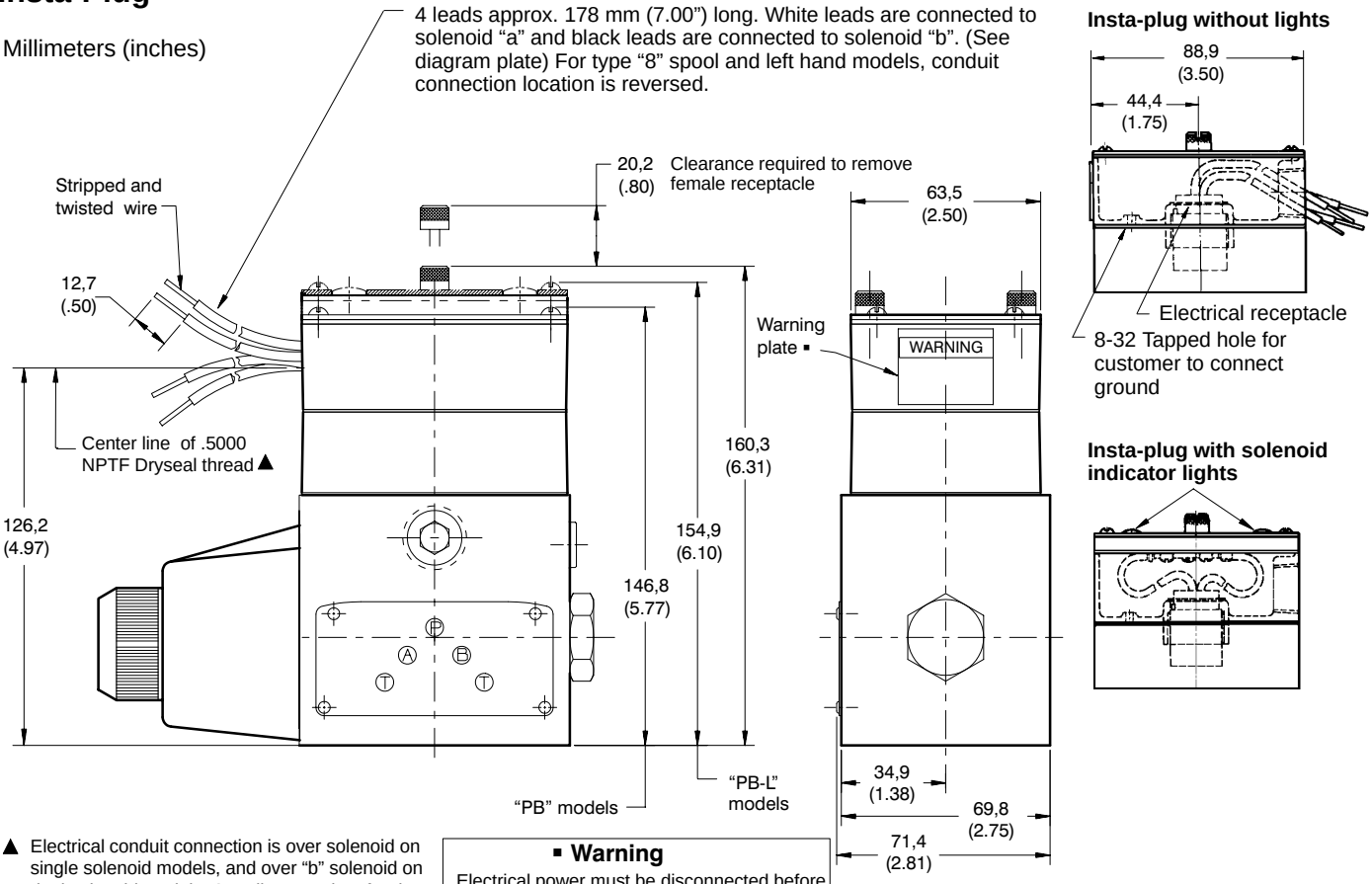

▲ Electrical conduit connection is over solenoid on single solenoid models, and over “b” solenoid on dual solenoid models. See diagram plate for “b” solenoid location.

▪ Warning

Electrical power must be disconnected before removing or replacing this receptacle.

Air Gap Solenoid Pilot Options

AC Solenoids (double) - No-spring Detented, Pressure Centered & Spring Centered Models

(To order air gap pilot delete “W” in model code.) Spring offset, single solenoid and spring centered models also available.

Weight @ 44 kg (98 lbs.)

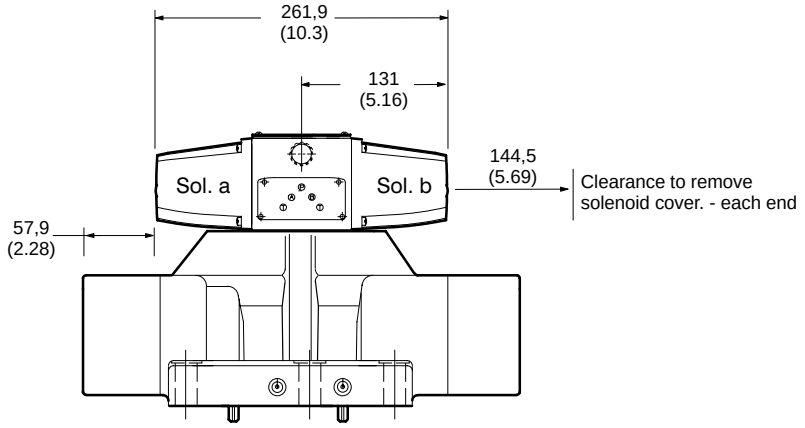

DC Solenoids (double) - No-spring Detented, Pressure Centered & Spring Centered Models

Spring offset, single solenoid and spring centered models also available.

Weight @ 45,4 kg (100 lbs.)

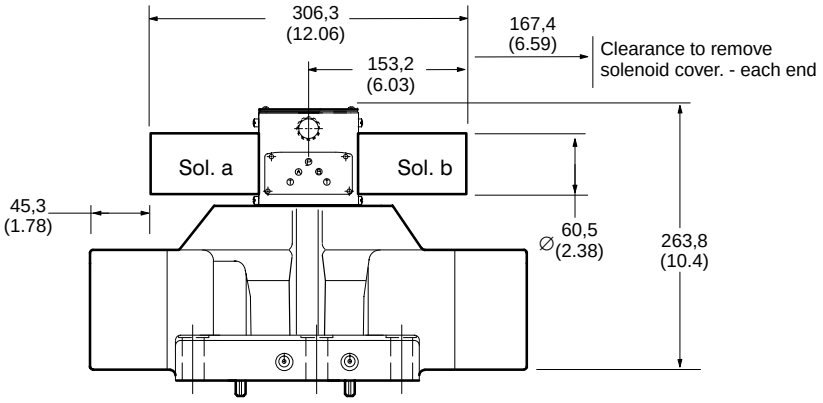

Hazardous Locations (X) & Mining Applications (XM)

Spring offset, single solenoid and spring centered models also available.

X - Valves for hazardous locations are Underwriters approved - Class 1 Group D, Class 2 Group E - F - G, for 115 and 230 V, 60 Hz service only.

Weight @ 47 kg (104 lbs.)

XM - Valves for mining applications are built to MSHA schedule 2G - file X/P 837. For specific models covered by this certification contact your Vickers representative.

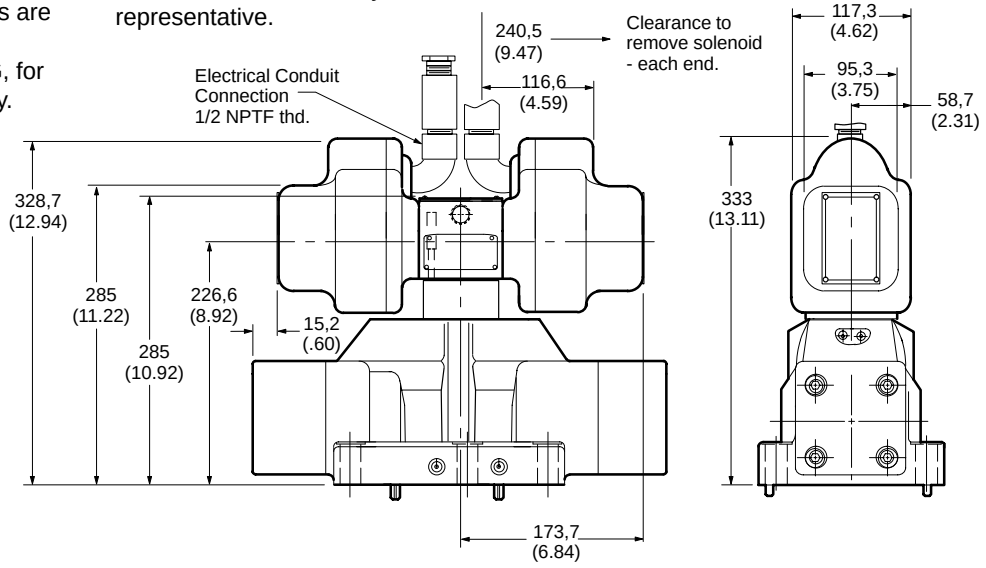

Model Code

D03 Pilot Operated Directional Valve

DG5S4 - 10 * * (P) (L) (X) - * - (E) - (T) - * - (V) M - S* - * *** * (L) - ** * - *** - 90/100 - EN460**

1 2 3 4 5 6 7 8 9 10 11 12 13 14 15 16 17 18 19 20 21 22 23

1 Directional Control Valve

Subplate mounting; solenoid controlled; pilot operated; sliding spool; 4-way flow direction.

2 Valve Size

1-$^{1}/_{4}$" valve size NFPA - D10 (ISO-4401-10) mounting interface.

3 Spool Types

0, 1, 2, 3, 4, 6, 8, 9, 11, 31, 33 & 52 (See flow rating and tabulation for description.)

4 Spool/Spring Arrangement

A - Spring offset
B - Spring centered with solenoid "A" removed.
C - Spring centered.
D - Pressure centered.
F - Shift to center from spring offset - single solenoid.
N - No-spring detented (pilot valve only)

5 Manual Override Operator

(For single solenoid models only.) Omit if not required.

6 Left Hand Build

(For single solenoid models only.) Omit for right hand assembly (for left hand assembly "b" solenoid used, flow is P to B when "b" solenoid is energized) for single solenoid "A" and "B" models only.

7 Response type

X - Fast response
Blank - Standard low shock models

8 Main Stage Spool Control Options

1 - Spool stroke length adjustments.
2 - Pilot choke adjustments (DGMFN-5-Y-AW-BW-20) spool shift control.
3 - Pilot choke & stroke adjustments.
7 - Stroke adjustment "A" port end only
8 - Stroke adjustment "B" port end only
2-7 - Pilot choke adjustment & stroke adjustment "A" port end only.
2-8 - Pilot choke adjustment & stroke adjustment "B" port end only.

9 Pilot pressure

E - External pilot pressure
Blank - Internal pilot pressure

10 Pilot drain

T - Internal pilot drain
Blank - External pilot drain

11 Pressure Port Check Valve Option

K - 0,34 bar (5 psi) cracking press.
R - 3,4 bar (50 psi) cracking press.
S - 5,2 bar (75 psi) cracking press.
Blank - Omit if not required

12 Solenoid energization identity

V - Solenoid identification determined by position of solenoid (solenoid "A" at port "A" end and/or solenoid "B" at port "B" end)
Blank - Standard arrangement for ANSI B93.9 (energize solenoid "A" for flow P to A port)
(Code V for any valve with code 4 or code 8 spool)

13 Flag symbol/Pilot Valve

DG4V3-60 (NFPA D03) Pilot Valve & Adapter Plate.
M - Electrical options and features

14 Spool indicator switch

(Available on models with high performance pilot DG4V3 only)

S3 - Normally open (available on valves with code P* only)
S4 - Normally closed (available on valves with code P* only)
S5 - Free leads (available on valves with coil type code F only)
S6 - LVDT type DC switch with Pg7 connector plug

15 Coil type

U - ISO 4400
F - Flying lead
SP1 - Single 6,3 mm spade to IEC 760
SP2 - Dual 6,3 mm spade to IEC 760

16 Electrical connections

(Code F coil only, see pages 15 & 16)

T - Wired terminal block
PA - Insta-plug male receptacle only
PB - Insta-plug male & female receptacle
PA3 - NFPA 3-pin connector
PA5 - NFPA 5-pin connector
Blank - Omit if not required

17 Housing

(Code F coil only)

W - $^{1}/_{2}$ NPT thread wiring housing
J - 20 mm thread wiring housing
Blank - Omit if not required

18 Solenoid indicator lights

(Code F coil w/Code T electrical connections only)

L - Indicator lights
Blank - Omit if not required

19 Coil identification

A - 110V/50 Hz
B - 110V/50 Hz, 120V/60 Hz
C - 220V/50 Hz
D - 230V/50 Hz, 240V/60 Hz
G - 12V DC
H - 24V DC
DJ - 98V DC
P - 110V DC

20 Pilot valve tank pressure rating

2 - 10 bar (145 psi) DG4V3-60 with S3, S4, or S5 spool indicator switch
4 - 70 bar (1000 psi) hazardous model
5 - 100 bar (1450 psi) DG4V3S-60
6 - 160 bar (2285 psi) DG4V3-60 with AC solenoids and optional S6 spool indicator switch
6 - 207 bar (3000 psi) DG4V3-60 with DC solenoids and optional S6 spool indicator switch

21 Pilot valve port orifices

Code	Orifice Diameter
*00 -	Solid plug
*03 -	0,30 mm (0.012 in)
*06 -	0,60 mm (0.024 in)
*08 -	0,80 mm (0.030 in)
*10 -	1,00 mm (0.040 in)
*13 -	1,30 mm (0.050 in)
*15 -	1,50 mm (0.060 in)
*20 -	2,00 mm (0.080 in)
*23 -	2,30 mm (0.090 in)
Blank -	Omit if not required

(* = P, T, A, and/or B as required)

22 Design number

Subject to change. Installation dimensions remain as shown for designs 90 through 99 and 100 through 109.
90 – DG4V3S–60 pilot valves
100 – DG4V3–60 pilot valves

23 Special Feature

EN460 Anti-spin feature for type 4&8 spools.

Click here for more information on the pilot control valve,.

Installation Dimensions

DG5S4-102C-M-M-WB-90/100
Single & Double Solenoid
Spring Offset,Spring Centered
& No Spring Detented Models

Millimeters (inches)

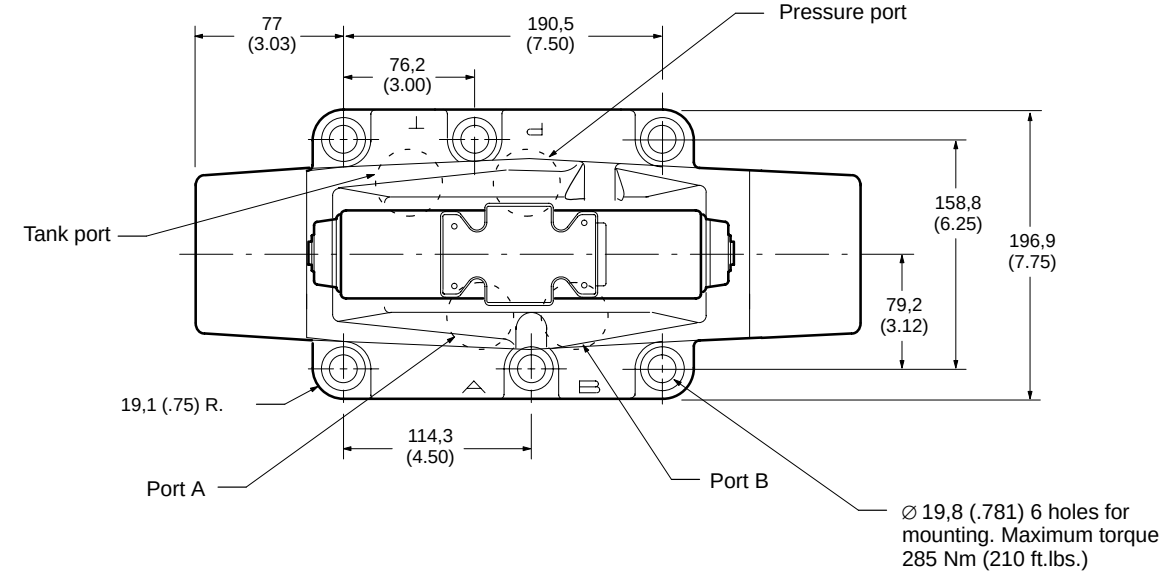

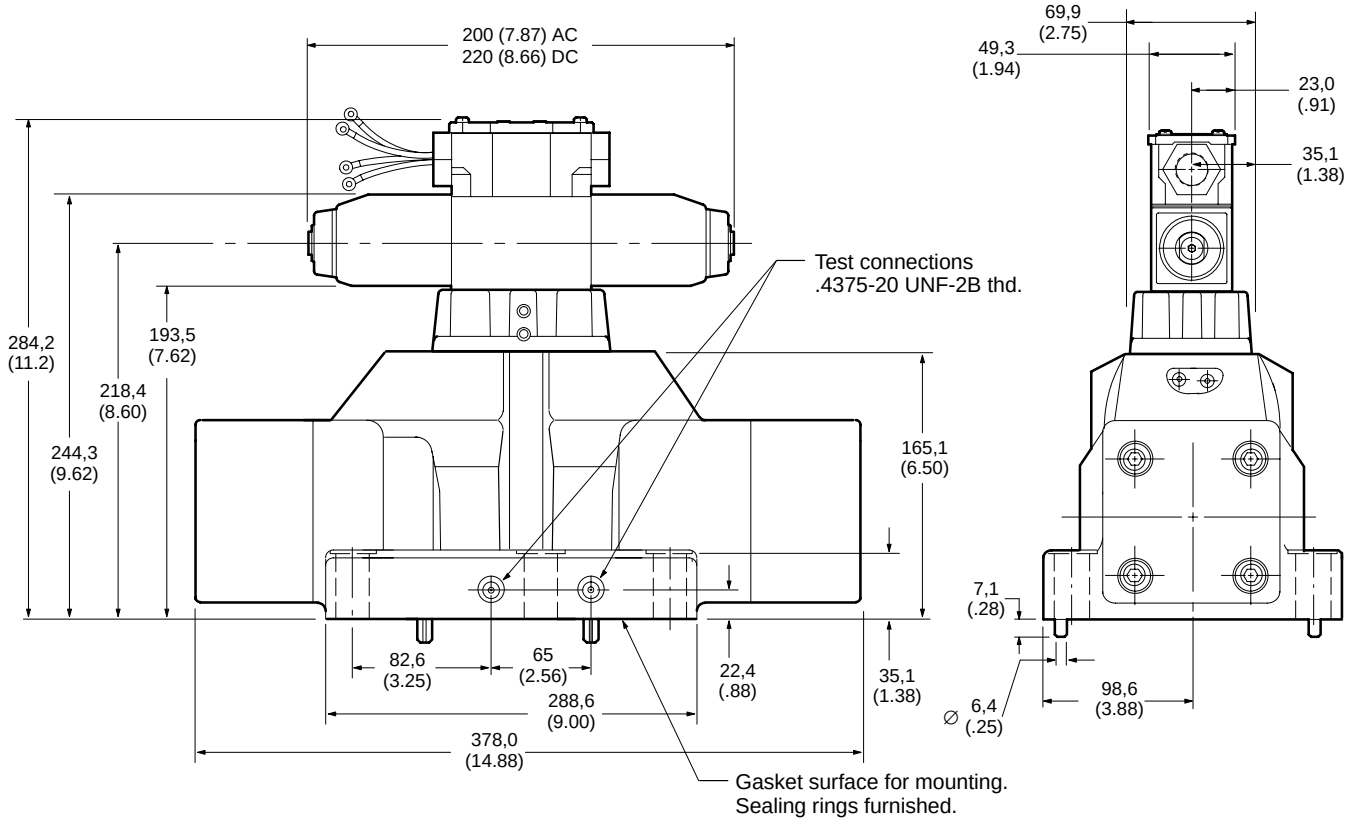

Electrical Information

Terminal strip and lights

For valves with type “F” coils.

Dim mm (in.)

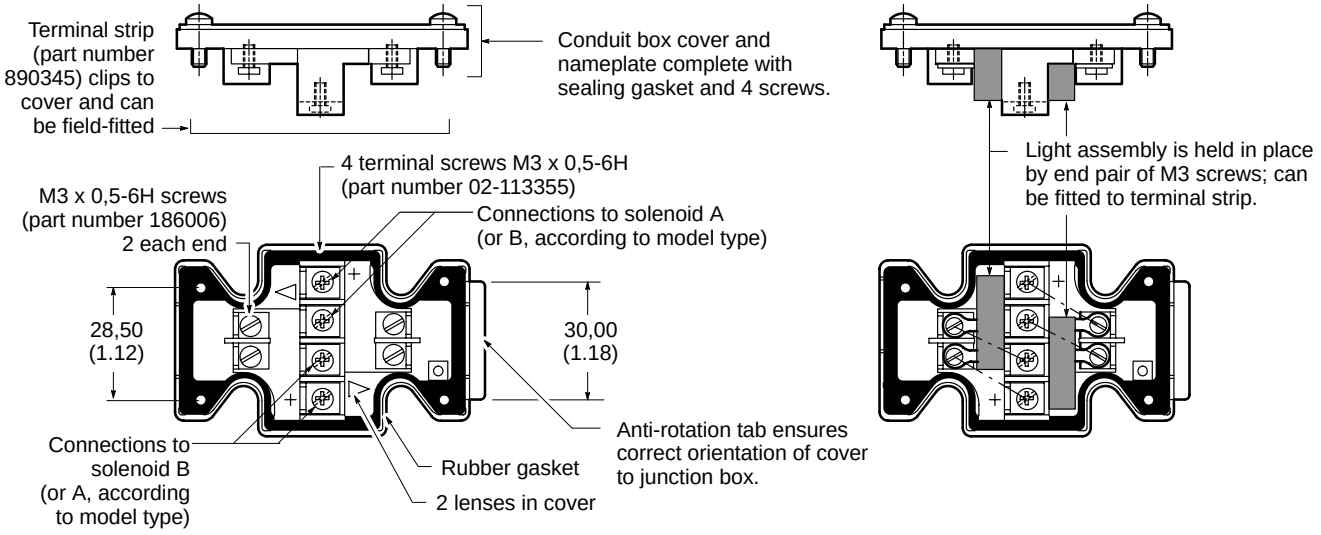

●*1. For DC coils the +ve lead(s) must be connected to the terminal(s) marked +. When using 3-wire incoming leads to double solenoid valves (i.e. common neutral) the inner pair of terminals must be interconnected.*

2. For correct light indication of energized solenoid ensure that solenoid leads are correctly connected: light terminals are common with each outer pair of solenoid terminals according to the side with + mark.

Insta-Plug

DG4V-3(S)---FPA---60
DG4V-3(S)---FPBW---60

Vickers 2-part “Insta-Plug” eliminates breaking electrical inputs for valve disconnect. A male half is pre-wired to the valve body. The mating plug is inside a wire housing with external terminals for machine wire connections.

Captive thumb screws, when loosened, permit the wire housing to be pulled clear of the valve for disconnect. A longer ground post provides first make/last break ground connection.

The PBW configuration combines both male and female plugs in the wiring housing for a self-contained plug-in unit.

Optional solenoid indicator lights are pre-wired to the female plug. Solenoids “A” and/or “B” are identified on the wiring housing.

PA configuration

Dim mm (in.)

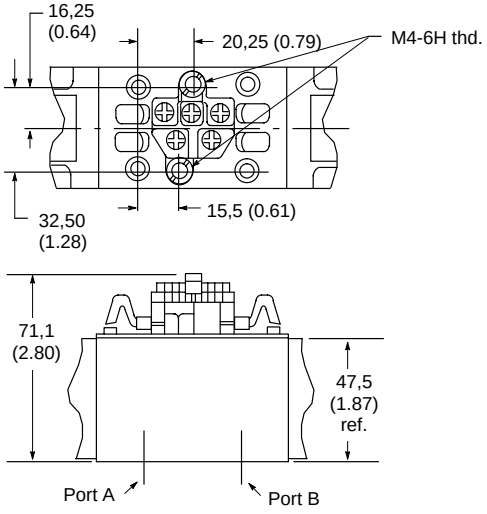

PBW configuration

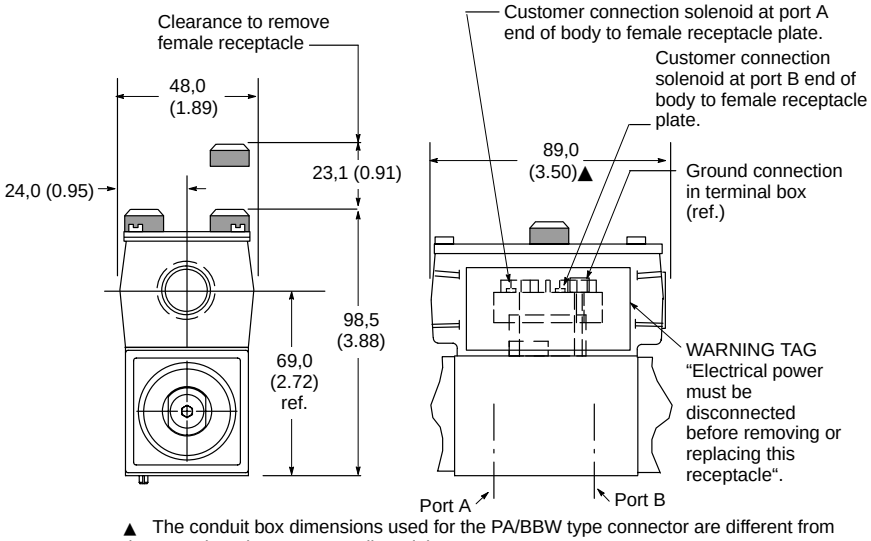

▲ The conduit box dimensions used for the PA/BBW type connector are different from those on the other “F” type coil models.

NFPA Connector T3.5.29-1980

DG4V-3(S)---FPA3W(L)-**-60
DG4V-3(S)---FPA5W(L)-**-60
DG4V-3---S3-FPA5W(L)-**-60
DG4V-3---S4-FPA5W(L)-**-60

The receptacle is a standard three or five pole connector with shortened leads and terminals added. The five pole plug has four leads 101,6 (4.0) long and one 177,8 (7.0) long. The three pole plug has two leads 101,6 (4.0) long and one 177,8 (7.0). All wires have underwriters recognized non-solder insulated eyelet terminals. The green wire is used for the ground (earth) connection (No. 8 screw furnished). Valves are supplied pre-wired.

Connection details and model type/model code references

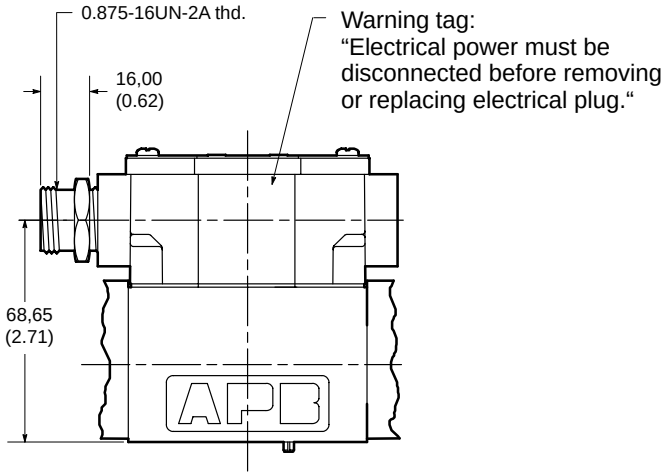

3 pin connector
Use with single solenoid valve
Key model code designations:
DG4V-3(S)-*A(L)(-**)-(V)M-FPA3W(L)
DG4V-3(S)-*B(L)(-**)-(V)M-FPA3W(L)

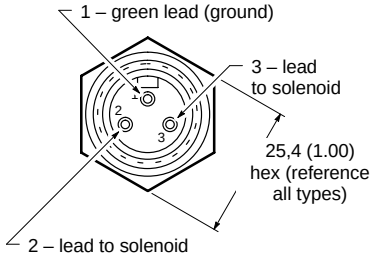

5 pin connector
Use with single solenoid valve
Key model code designations:
DG4V-3(S)-*A(L)(-**)-(V)M-FPA5W(L)
DG4V-3(S)-*B(L)(-**)-(V)M-FPA5W(L)

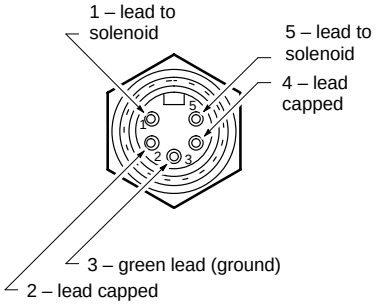

5 pin connector
Use with double solenoid valve
Key model code designations:
DG4V-3-*A(L)(-**)-(V)M-S4-FPA5W(L)

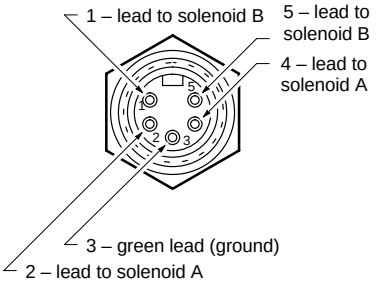

5 pin connector
Use with single solenoid valve with S3 spool position monitor switch
Key model code designations:
DG4V-3-*A(L)(-**)-(V)M-S3-FPA5W(L)

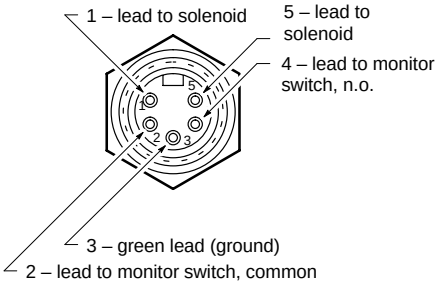

5 pin connector
Use with single solenoid valve with S4 spool position monitor switch
Key model code designations:
DG4V-3-*A(L)(-**)-(V)M-S4-FPA5W(L)

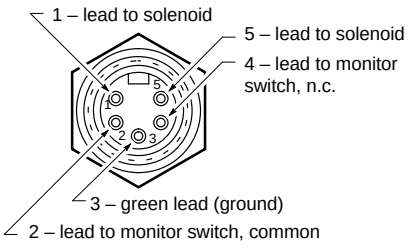

DIN Standard 43650
Plug-in Connectors

Plug connector
(Order separately)
(ISO4400/DIN 43650)

Cable diameter range:	Ø6–10 mm (0.24–0.40)
Wire section range:	Ø,5–1,5 mm^2 (0.0008–0.0023 in^2)
Terminals:	Screw type
Type of protection:	IEC144 class IP65, when plugs are fitted correctly to the valves with the interface seals (supplied with plugs) in place.

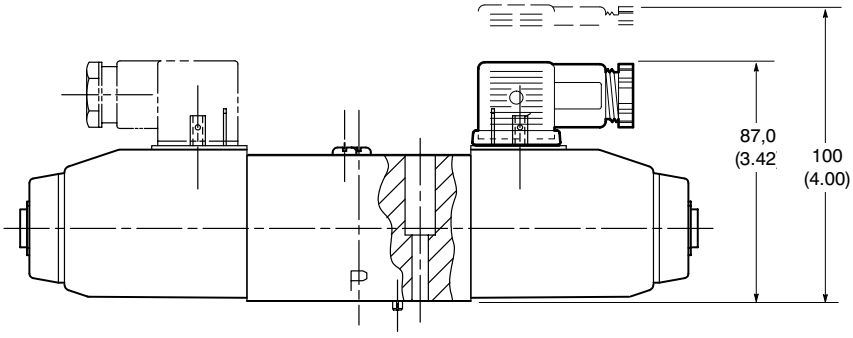

Connector can be positioned at 90° intervals on valve by re-assembling contact holder into appropriate position inside connector housing.

Connectors with and without indicator lights are available (order separately):

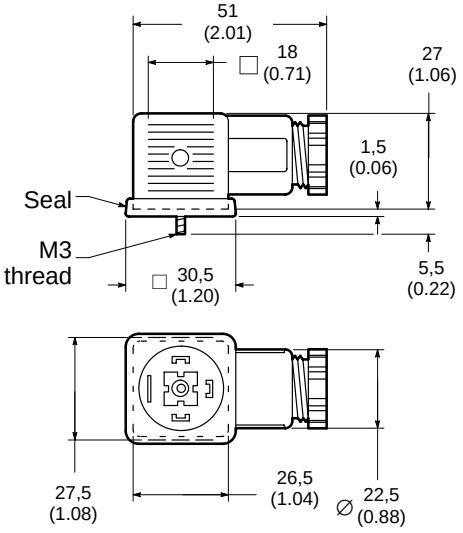

Receptacle	Voltage (AC or DC)	Gray – "A" sol.	Black – "B" sol.
Without lights	——	710776	710775
With lights	12–24	977467	977466
	100–125	977469	977468
	200–240	977471	977470

Optional Features

Pressure Centered Valves

This option provides more positive centering through greater force. Centering springs are used, in addition to pilot pressure, to ensure centering (flow must be within the spring centering ratings) should pilot pressure fail.

Springs can be removed by the user if not wanted. Pressure centered models require a minimum of 14 bar (200 psi) for pilot pressure. This pressure is not available through use of an integral check valve.

The following chart provides centering times for pressure centered models. Centering times for pressure centered models are shown with various pilot pressures

DG5 - Pressure Centering DG Valves

Typical centering times in seconds.

Model	Pilot Pressure bar (psi)	"B" to Center	"A" to Center
DA	10,3 (150)	.104	.144
	17,2 (250)	.080	.108
	69 (1000)	.056	.064
DB	69 (1000)	.064	.085
	138 (2000)	.060	.080
D	138 (2000)	.065	.092
	207 (3000)	.060	.076

Notes:
Above figures for "DA" model are with fast response option ("X" in model code).
Fast response option not available with "D" or "DB" models.

Above data based on air gap type solenoid pilot valve. When using the wet armature solenoid pilot ("W" in model code) add .010 seconds to the times shown. Models with the DG4V3-60 pilots ("M" in model code) not recommended for this feature.

Integral Check Valves

For open center spools using internal pilot pressure and internal pilot drain, select appropriate spring model (K, R or S) from "check valve pressure drop vs. flow" curve shown on page 7.

Total pressure drop required is 5,2 bar (75 psi), therefore, determine valve ΔP (P to T) at the actual application flow rate. Subtract this value from 5,2 bar (75 psi) and call its value "C". Refer to the "check valve pressure drop" curve at the application flow rate and select the spring model letter whose curve is above the bar (psi) value "C" (See "pilot pressure" note for external drain models.)

Example:
Model selected - DG5S4-100C-T-*-5* and flow in neutral 189 l/min (50 USgpm). Assuming no pressure or pressure surges in the tank line. To select proper integral check valve consider:

ΔP (P to T) from chart = approx. 4 bar (55 psi) at 473 l/min (125 USgpm)

ΔP at 208 l/min (55 USgpm) = 4 bar (55 psi) $(^{50}/_{125})^2$ = 0,6 bar (9 psi)

5,2 bar (75 psi) – 0,6 bar (9 psi) = 4,6 bar (66 psi) additional pilot pressure to be obtained through integral check valve, value "C".

From check valve pressure drop curves for DG5S4-10 series at 189 l/min (50 USgpm). 4,6 bar (66 psi) is generated between the R and S check valves.

Select "S" for DG5S4-100C-T-**S**-W*-5*

Fast Response

Use of this option decreases the shift time, however, the system shock generation is increased.

The following chart provides shift times for fast response and standard spring centered models for various pilot pressures.

Typical Shift Time in Seconds for AC Models

Pilot Pressure bar (psi)	Standard Center to "A" or "B"	Fast Response Center to "A" or "B"
34,5 (500)	.120	.060
69 (1000)	.085	.050
138 (2000)	.070	.040
207 (3000)	.055	*

Note:
All spring centered models require approximately .125 of a second to center from either side.
When using the wet armature solenoid operated pilot ("W" in model code) add .010 seconds to the times shown. The DG4V3-60 pilot is not recommended where fast response is of concern.

* Because of the high drain line pressure transients generated during shifting, use of the fast response option is not recommended for pilot pressure exceeding 138 bar (2000 psi). DC shift times will be approximately three or four times the above AC values.

Subplate

Subplates & Bolt Kits

Valves, subplates and mounting bolts must be ordered separately.

Example:
One (1) DG3S-102C-5* Valve
One (1) DGSM-10-24S-11 Subplate
One (1) BKDG10-636 Bolt Kit
(bolt length 69,9 (2.75)

When subplate is not used, a machined pad must be provided for mounting. Pad must be flat within 0,0127 mm (.0005 inch) and smooth within 1,6 µm (63 microinch). Mounting bolts, when provided by customer, should be SAE grade 7 or better.

Mounting Subplate DGSM-10-24S-11

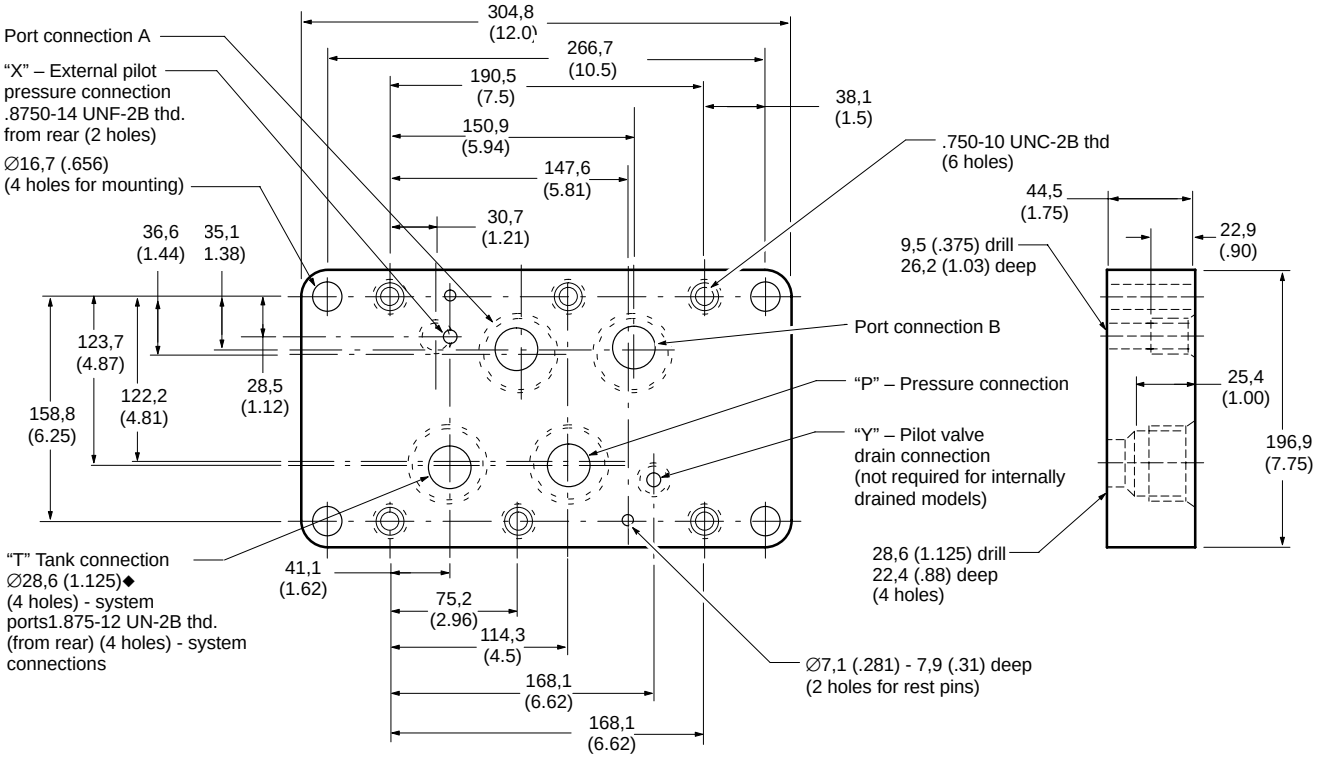

◆ Manifolds or other mounting interface can be drilled to 33,3 (1.312) dia. Fitting size and fitting spacing limit the subplate port size to 28,6 (1.125) dia.

Application Data

Fluid Cleanliness

Proper fluid condition is essential for long and satisfactory life of hydraulic components and systems. Hydraulic fluid must have the correct balance of cleanliness, materials, and additives for protection against wear of components, elevated viscosity, and inclusion of air.

Essential information on the correct methods for treating hydraulic fluid is included in Vickers publication 561 “Vickers Guide to Systemic Contamination Control” available from your local Vickers distributor or by contacting Vickers, Incorporated. Recommendations on filtration and the selection of products to control fluid condition are included in 561.

Recommended cleanliness levels, using petroleum oil under common conditions, are based on the highest fluid pressure levels in the system and are coded in the chart below. Fluids other than petroleum, severe service cycles, or temperature extremes are cause for adjustment of these cleanliness codes. See Vickers publication 561 for exact details.

Vickers products, as any components, will operate with apparent satisfaction in fluids with higher cleanliness codes than those described. Other manufacturers will often recommend levels above those specified. Experience has shown, however, that life of any hydraulic component is shortened in fluids with higher cleanliness codes than those listed below. These codes have been proven to provide a long, trouble-free service life for the products shown, regardless of the manufacturer.

	System Pressure Level bar (psi)		
Product	**<70 (<1000)**	**70-207 (1000-3000)**	**207+ (3000+)**
Vane Pumps – FIxed	20/18/15	19/17/14	18/16/13
Vane Pumps – Variable	18/16/14	17/15/13	
Piston Pumps – Fixed	19/17/15	18/16/14	17/15/13
Piston Pumps – Variable	18/16/14	17/15/13	16/14/12
Directional Valves	**20/18/15**	**20/18/15**	**19/17/14**
Pressure/Flow Control Valves	19/17/14	19/17/14	19/17/14
CMX Valves	18/16/14	18/16/14	17/15/13
Servo Valves	16/14/11	16/14/11	15/13/10
Proportional Valves	17/15/12	17/15/12	15/13/11
Cylinders	20/18/15	20/18/15	20/18/15
Vane Motors	20/18/15	19/17/14	18/16/13
Axial Piston Motors	19/17/14	18/16/13	17/15/12
Radial Piston Motors	20/18/14	19/17/13	18/16/13

Fluids and Seals

Flourocarbon seals are standard and are suitable for use with phosphate ester type fluids or their blends, water glycol, water-in-oil emulsion fluids and petroleum oil.