Service Data

Vickers®

Directional Controls

Directional Control Valves
CETOP 3 Size Soft Shift

DG4V 3 (S) – **(L) 2 ** – (P2) – (V) M –**(L) – **H * – 60 – (P* – A* – B* – T*)**

Model	Knob	⁎Core Tube S/A
DG4V–3–2–*	508113	02–300529
DG4V–3S–2–*	694272	02–135785
DG4V–3–2–P2–*	508113	02–300529
DG4V–3S–2–P2–*	694272	02–135785

Restrictor Plug
Install In P,T,A, Or B As Required

CODE	ORIFICE DIA.	PART #
03	0,30 (0.012)	694341
06	0,60 (0.024)	694342
08	0,80 (0.030)	694343
10	1,00 (0.040)	694344
13	1,30 (0.050)	694345
15	1,50 (0.060)	694346
20	2,00 (0.080)	694347
23	2,30 (0.090)	694348

Orifice (1 req'd per core tube)
Refer to Orifice Changing Procedure

CODE	PART #	COLOR
00	Orifice omitted	———
07	635134	Green
08	635135	Blue
09	893320	Purple

Blank Nameplates (DG4V–3S–60 Standard Valve)

Model Code	Nameplate
DG4V–3S–***–**–M–U–**60	694302
DG4V–3S–***–**–M–F/FPA3/FPA5–**–60	694386
DG4V–3S–***–**–M–FPB–**–60	694363
DG4V–3S–***–**–M–FPBL–**–60	694362
DG4V–3S–C/N**–**–M–P–**–60	694364
DG4V–3S–A/B/F**–**–M–P–**–60	694365
DG4V–3S–AL/BL/FL**–**–M–P–**–60	694366

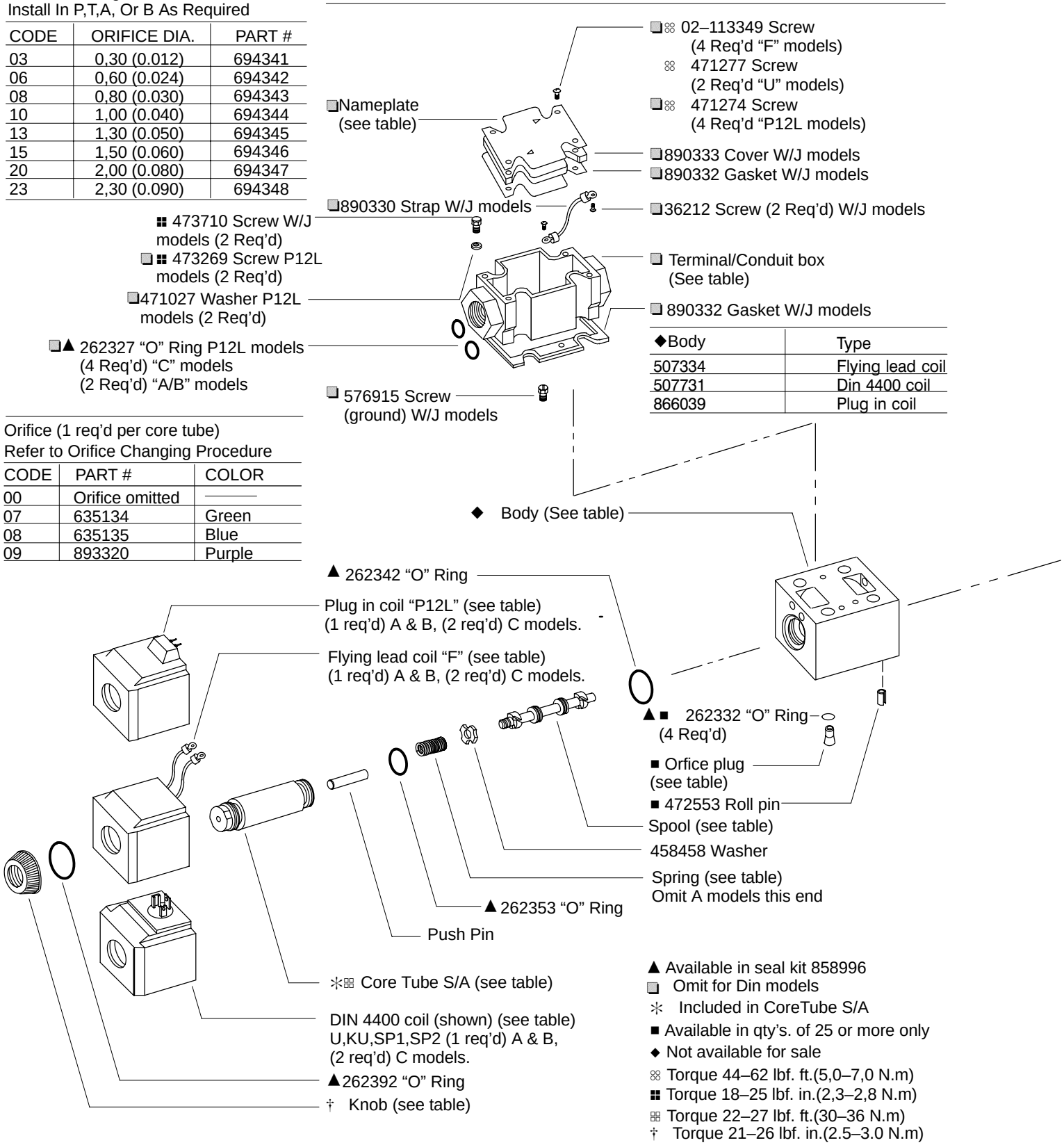

◆Body	Type
507334	Flying lead coil
507731	Din 4400 coil
866039	Plug in coil

▲ Available in seal kit 858996
❑ Omit for Din models
⁎ Included in CoreTube S/A
■ Available in qty's. of 25 or more only
◆ Not available for sale
⁘ Torque 44–62 lbf. ft.(5,0–7,0 N.m)
⁞⁞ Torque 18–25 lbf. in.(2,3–2,8 N.m)
⊞ Torque 22–27 lbf. ft.(30–36 N.m)
† Torque 21–26 lbf. in.(2.5–3.0 N.m)

Blank Nameplates (DG4V–3–60 High Performance Valve)	
Model Code	Nameplate
DG4V–3–***–**–M–U–*7–60	694303
DG4V–3–***–**–M–U–*2/*6–60	694451
DG4V–3–***–**–M–F/FPA3/FPA5–*7–60	694387
DG4V–3–***–**–M–FPB–**–60	865929
DG4V–3–***–**–M–FPBL–**–60	865930
DG4V–3–C/N**–**–M–P–**–60	865933
DG4V–3–A/B/F**–**–M–P–**–60	865934
DG4V–3–AL/BL/FL**–**–M–P–**–60	865935

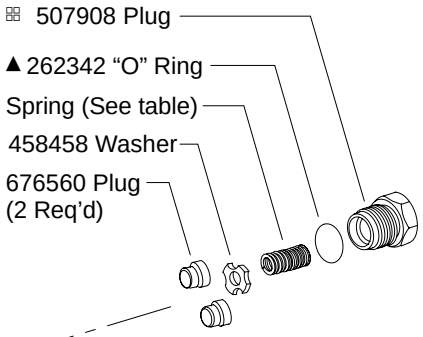

DG4V–3(S)–*A2 **–(V)M–FW–60
Spring offset to CYL. “A”, shift to center.
DG4V–3(S)–*B2 **–(V)M–FW–60
Spring centered, Sol. “A” removed.
Refer to other end of valve for common part numbers except as noted.

♠ For more information on options refer to service drawing I–3886–S.

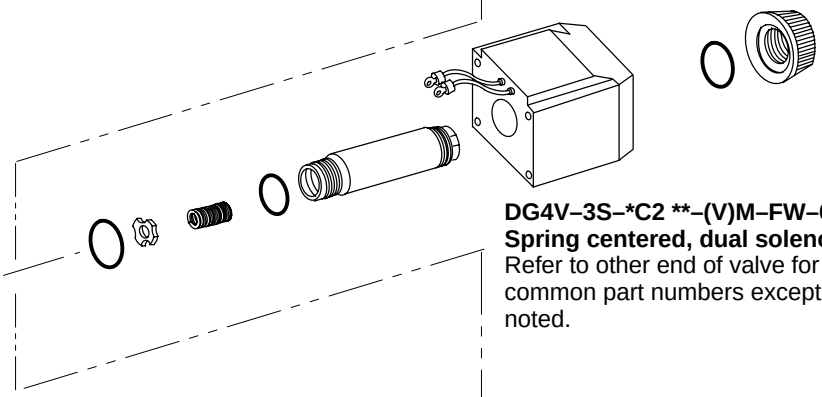

DG4V–3S–*C2 **–(V)M–FW–60
Spring centered, dual solenoid.
Refer to other end of valve for common part numbers except as noted.

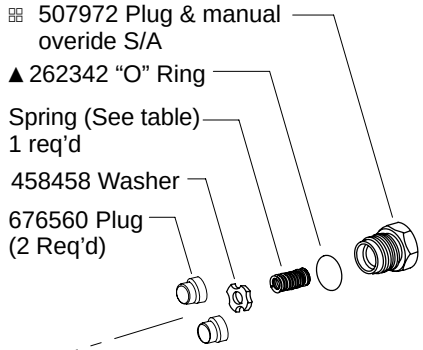

NOTE

Right hand assembly shown for all single solenoid valves, for left hand assembly all parts reversed except body (& spool on “B” builds) and electrical connectors (where applicable).

DG4V–3(S)–*A2 **–*P2–(V)M–FW–60
Manual override in end cover.
Refer to other end of valve for common part numbers except as noted.

Model Code Coil Identification Letter

Coil letter	Coil S/A Voltage DC	Coil S/A “F” models	Coil S/A “U” models	Coil S/A “SP1” models	Coil S/A “SP2” models	Coil S/A “KU” models	Coil S/A “P12L” models
GH	12 VDC	02–123958	02–123938	02–123950	02–123942	02–140393	02–124274
DTH	18 VDC	02–124394	02–124392	02–124719	02–124389	02–148712	02–124511
HH	24 VDC	02–123959	02–123939	02–123951	02–123943	———	02–124275
DJH	98 VDC	02–123960	02–123940	02–123952	02–123944	———	02–124238
PH	110 VDC	02–123961	02–123941	02–123953	02–123945	———	02–124276
SH	220 VDC	02–124260	02–124441	———	———	———	———

Type “F” flying lead coils must be powered by DC electrical signal. Type P12L coils must be powered by 110–120, 50–60 Hz AC rectified to DC signal. DIN rectified connectors (“11” or “12” in model code) can be used to convert AC volts to DC voltage to power the valve.

Model Code	Terminal Box “W/J” Flying lead	Conduit Box “P12L” Plug in	Type
DG4V3(S)–A/B/C–W	890341	———	Single/double coil
DG4V3(S)–A/B/C–J	890342	———	
DG4V3(S)–C–P12L	———	866000	Double coil with rectifier
DG4V3(S)–A/B–P12L	———	866001	Single coil with rectifier

Rotate conduit box/rectifier/light assembly 180° for models AL, BL, and 8B with solenoid mounted on B port side of body.

Spool/Spring Arrangement DG4V3/DG4V3S Models

Model	Type	DG4V3 Spool	DG4V3 Spring	DG4V3S Spool	DG4V3S Spring
–*B/C	2*	892913	890195	892913	507889
	3*/31*	927027	507889	927027	507889
	6*	892914	507889	892914	694299
	8*	02–303660	927200	893319	507889
	33*	892915	507889	892915	507889
	0*	02–148720	890195	02–148720	694299
–*A	2A	892916	890195	892916	507889

Assemble type “3” spool in body with narrow center land towards A port.
Assemble type “31” spool in body with narrow center land towards B port.

Orifice Changing Procedure

WARNING

1. Before breaking a circuit connection make certain that power is off and system pressure has been released. Lower all vertical cylinders, discharge accumulators and block any load whose movement could generate pressure. Plug all removed units and cap all lines to prevent entry of dirt into the system.
2. Using a $^{5}/_{32}$“ hex key, remove manual actuator plug and spring from the end of solenoid (Tightening torque 6.2–7.3 N.m 55–65 lbf.in.)
3. Insert extraction tool (878495) into solenoid via the manual actuator opening. Rotate tool until aligned and push pin into slot in armature.
4. Using $^{1}/_{2}$“ wrench and tool to prevent the armature from rotating, insert $^{3}/_{32}$“ hex key down the center of tool and remove orifice plug.
5. Replace by the same method, tightening orifice snug to ensure bottoming of threads. Smaller orifices increase response times, larger orifices decrease response time.

Orifice & tool kit 02–140211

For fine tuning shift performance, orifice must be ordered separately. The kit includes (2) each of .7, .8 & .9 mm dia. orifices, (1) installation tool, (1) $^{5}/_{32}$“ hex key and (1) $^{3}/_{32}$“ hex key.

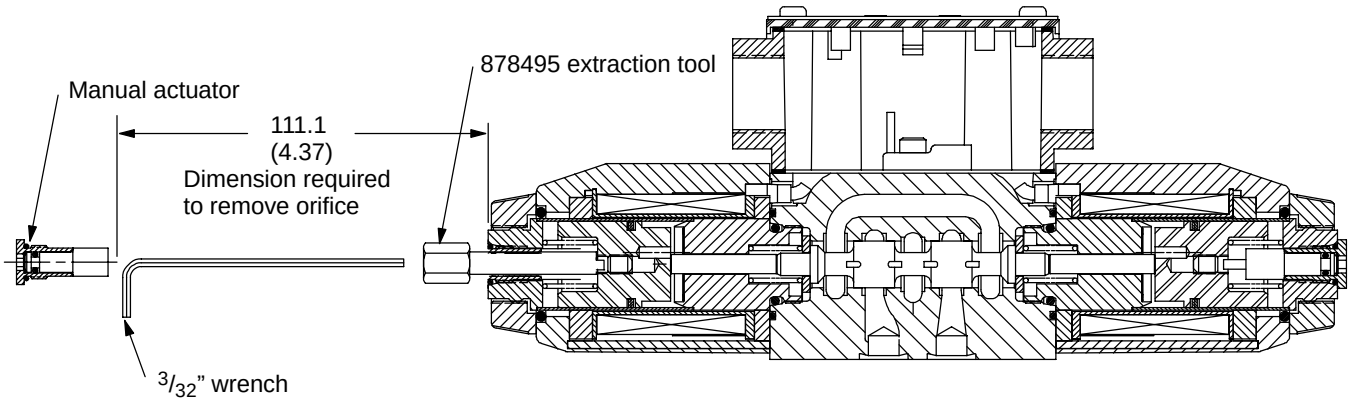

Model Code

DG4V 3 (S) - * *(L) 2 ** - (P2) - (V) M - * * * * (L) - **H * - 60 - (P*-A*-B*-T*)

1 2 3 4 5 6 7 8 9 10 11 12 13 14 15 16 17 18 19

1 Valve Type

D – Directional control valve
G – Subplate mounted
4 – Soleniod operated
V – Rated pressure 350 bar (5075 psi)

2 Interface

3 – ISO 4401–03, CETOP 3 (NFPA DO3)

3 Valve performance

S – Standard performance
Blank – High performance

4 Spool types

0 – Open center
2 – Closed center (all ports)
3 – P & B closed, A to T
6 – Closed center (P only)
8 – Tandem center (open crossover)
31 – P & A closed, B to T
33 – Closed center (bleed A & B)

5 Spool/Spring Arrangment

A – Spring offset, single soleniod
AL – Same as A but left hand build
B – Spring centered,single solenoid
BL – Same as B but left hand build
C – Spring centered

6 Soft shift valve

7 Soft shift orifice size

00 – No orifice
07 – 0.7 mm dia.
08 – 0.8 mm dia
09 – 0.9 mm dia.
20 – 2.0 mm dia*

* Minimun orfice size recommended for high performance type “8C” spool.

8 Manual overide options

Blank – Overide in soleniod end only.
P2 – Manual overide in end cap & solenoid, A & B models only.

9 Reverse solenoid identification

Blank – ANSI B93 energize solenoid A to give flow P to A.
V – Solenoid identification determined by position of soleniod (i.e. solenoid A is at port A end of valve, solenoid B is at port B end of valve).

10 Flag Symbol

M – (Introduces electrical features and options.)

11 ♠ Coil Type Options

F – Flying lead type coils
U – DIN 4400 coils.
SP1 – Single $^1/_4$ ” male spade.
SP2 – Dual $^1/_4$ ” male spade.
P12L – Plug–in coils W/rectifier in junction box, lights included.
KU – Top exit flying leads.

12 Coil Connector Options

(“U” type coils only, omit if not required.)

1 – Connector fitted.
6 – Connector with light fitted.
11 – Rectifier with lights fitted.
12 – Rectifier fitted.

13 ♠ Electrical Connector Options

(“F” type coils only, omit if not required.)

PA – Instra–plug male recpt. only.
PA3 – 3–pin receptacle.
PA5 – 5–pin receptacle.
PB – Insta–plug male & female recpt.
T – Terminal block.

♠ For more information on options refer to service drawing I–3886–S.

14 ♠ Wiring Housing Thread Options

(“F” type coils only, omit if not required.)

W – $^1/_2$ “ NPT
J – M20 x 1.5 – 6H
G – G $^1/_2$ “

15 ♠ Solenoid Indicator Light Options

(Not available on PA, U, SP1, SP2, omit if not required.)

16 ♠ Coil Identification Letter Options

GH – 12V DC
DTH – 18V DC
HH – 24V DC
DJH – 98V DC (req’d. for P12L models.
PH – 110V DC
SH – 220V DC

17 Tank Pressure Rating

2 – 10 bar (145 psi) for
5 – 100 bar (1450 psi) for DG4V–3S
7 – 207 bar (3000 psi) for DG4V–3

18 Design Number

19 Port Orfices

03 – 0.3 mm dia.
06 – 0.6 mm dia.
08 – 0.8 mm dia.
10 – 1.0 mm dia.
13 – 1.3 mm dia.
15 – 1.5 mm dia
20 – 2.0 mm dia.
23 – 2.3 mm dia.
(Example: “P03” = 0.3 mm dia. orifice in P port of valve. Omit if not required.)

Printed in U.S.A.