Service Data

Vickers®

Directional Controls

Wet Armature, Solenoid Operated, Directional Valves

DG4S4-01*(*)B/C-W3*-50

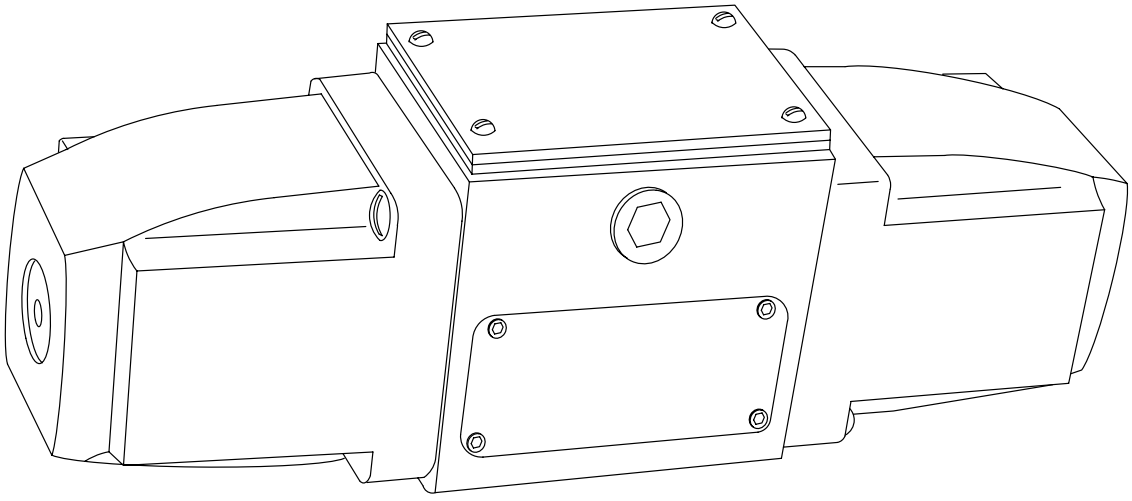

VICKERS

Revised 10-01-88

I-3558-S

WARNING

Use this drawing for parts information only.

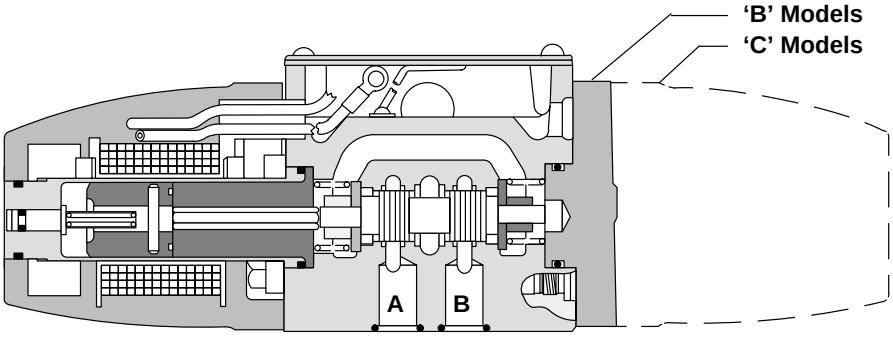

DG4S4-01*B/C-W-*-50

Model	Spool	Diagram Plate	Spool Kit
DG4S4-010B/C-W-*-50	463385	290341	940711
DG4S4-011B/C-W-*-50	463386	290342	940712
DG4S4-012B/C-W-*-50	463387	290343	940713
DG4S4-013B/C-W-*-50	463388	290344	940714
DG4S4-016B/C-W-*-50	463389	290345	940715
DG4S4-0168B/C-W-*-50		577480	◆940714
DG4S4-017B/C-W-*-50	463390	290346	940716
DG4S4-0178B/C-W-*-50		577482	◆940715
DG4S4-018B/C-W-*-50	463391	290340	940717
DG4S4-0133B/C-W-*-50	463392	577484	940718

Assemble type 1 spool with relieved land toward "A" port.
Assemble type 3 spool with narrow land toward "A" port.

Spool kit includes spool, diagram plate, seal kit and parts prefixed with a closed square symbol (■).

◆ A type "68" spool kit is the same as the type "6" except a different diagram plate is used and the "B" model solenoid is assembled on the opposite end of the valve. A type "68" pilot valve is required for a (C) spring centered two stage valve with "4" or "8" type main stage spools.

A type "78" spool kit is the same as the type "7" except a different diagram plate is used. A type "78" pilot valve is required for a (D) pressure centered two stage valve with "4" or "8" type main stage spools.

Note

Right hand assembly shown (B models). For left hand assembly all parts, except body, are reversed. Example of left hand model: DG4S4-012B-W-*-50-LH.

△ Assemble washer with sharp break edge toward outside of valve.

Coil Type	"W" Non-Serviceable	"W3" Serviceable
AC	△ 926593	941034
DC	————	941035

⊖ Included in serviceable (W3) Core Tube Subassembly.

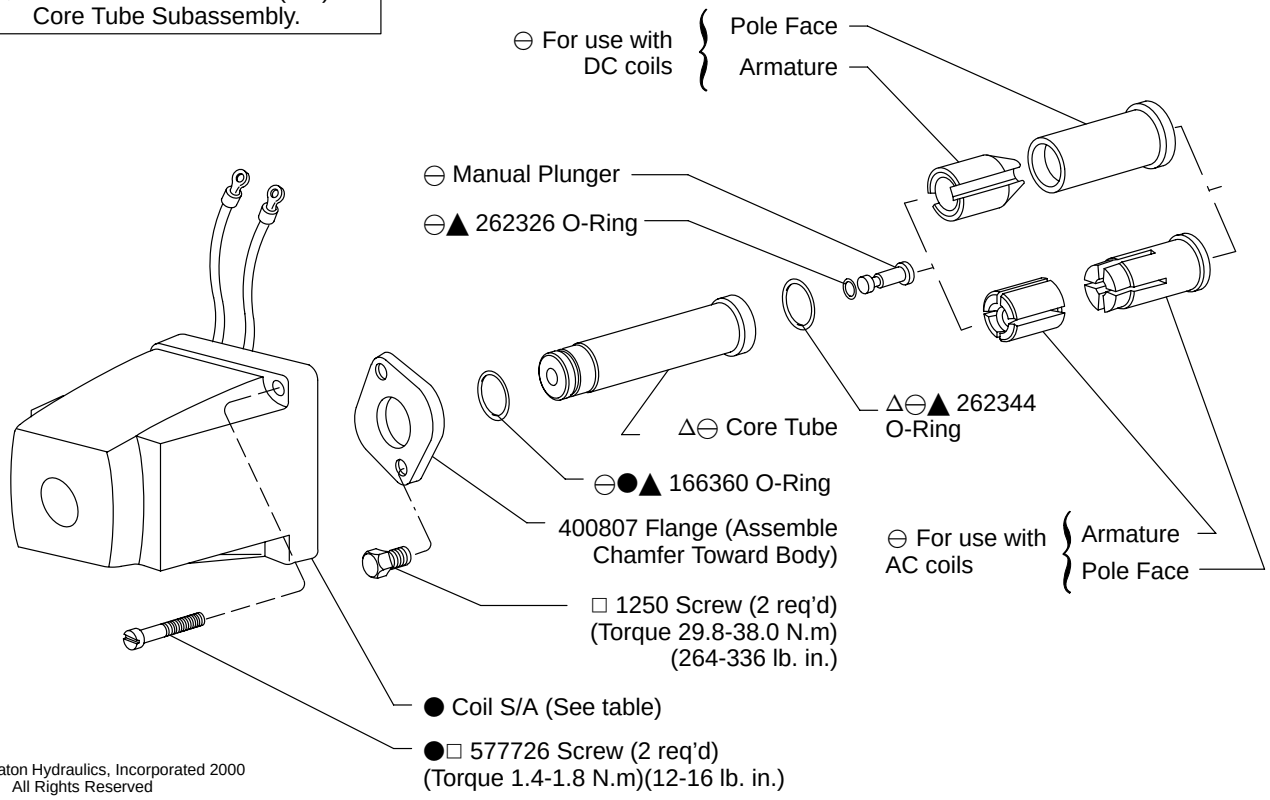

© Eaton Hydraulics, Incorporated 2000
All Rights Reserved

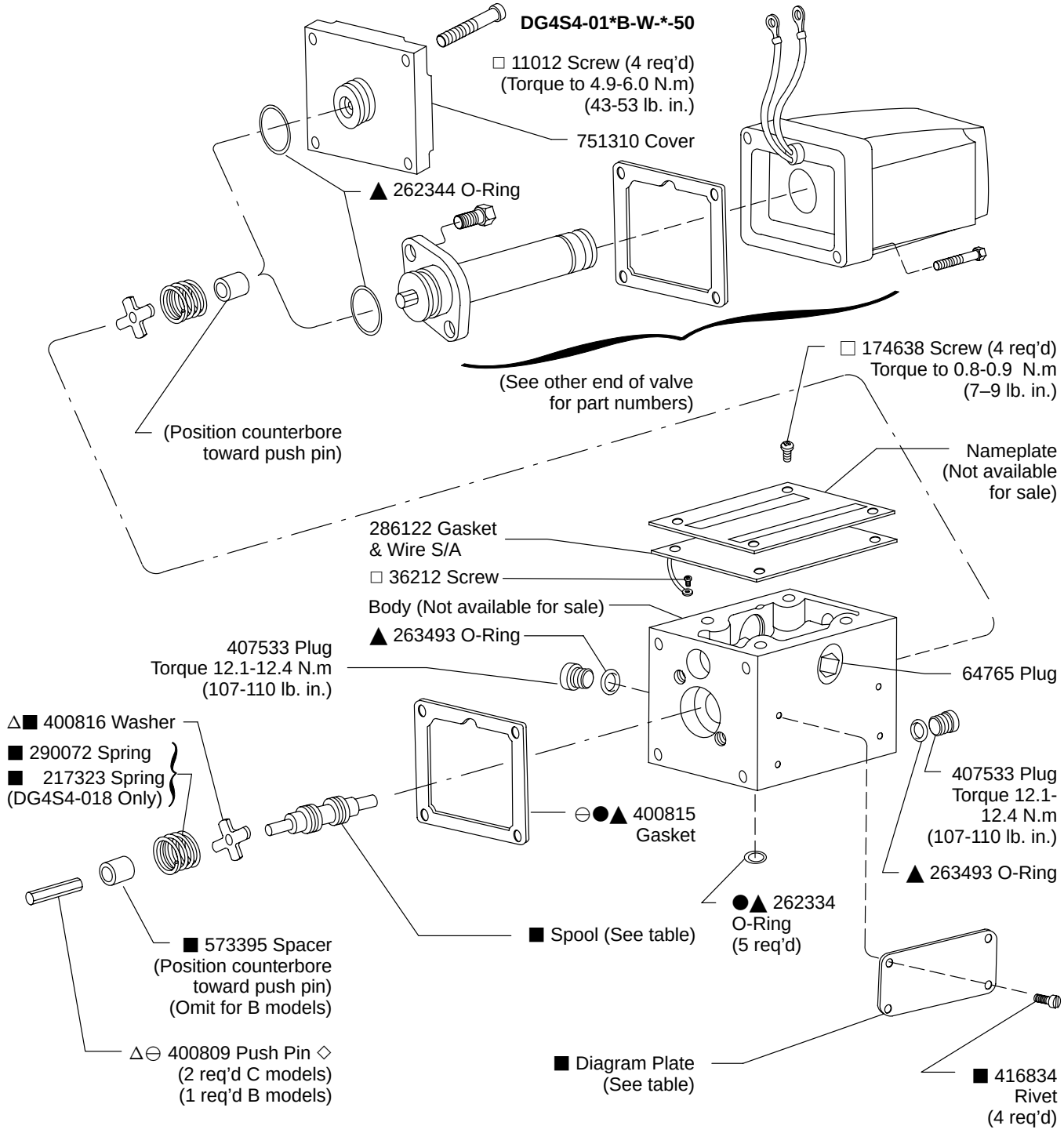

Note
Part numbers prefixed with a symbol are available only as service kits.

◇ Suffix symbol pertains only to Vickers material control.

▲ Service all units W/F3 Seal Kit 920109

□ Included in Fastener Kit 942465

● Included in Coil Kit

● Coil S/A	Coil Kit	AC Volt T/Hz	DC Volt	Coil Code
400823	942466	110/50, 115/60, 120/60		B
400824	942467	220/50, 230/60		D
400825	942468	440/50, 460/60		M
400826	942469		12	G
400827	942470		24	H
435755	941017	127/50		EG
582214	941109		250	X
730273	926461		48	J

✳ ***CAUTION***

Correct armature and pole face must be used for AC and DC operation

Model Code

(F3) - DG4S4 * - 01 * * - W3 - * - 50 - (LH)

1 2 3 4 5 6 7 8 9 10

1 **Seal Material**

F3 - Seals for mineral oil and fire resistant fluids

2 **Model Series**

DG3S4 - Directional valve, subplate or manifold mounted, solenoid operated, sliding spool, 4 way flow direction

3 **Solenoid Indicator Lights**

L - Light
Omitted - None

4 **Series**

5 **Spool Type**

6 **Spring**

B - Spring centered/one solenoid
C - Spring centered

7 **Wet Armature Type**

W - Non-serviceable core tube S/A
W3 - Serviceable core tube S/A

8 **Coil Identification Letter**

9 **Design**

10 **Left Hand Assembly**
"B" Models Only

For models with Solenoid Indicator Lights

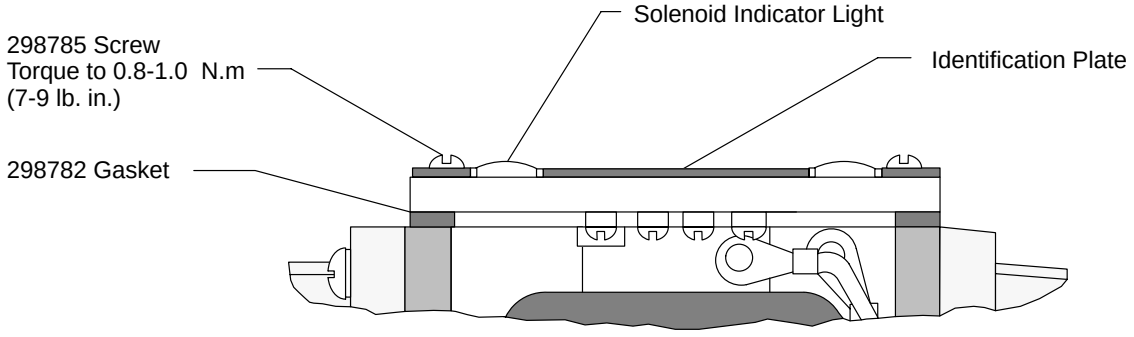

Solenoid Indicator Light Kit (Includes all parts identified)	
Voltage Range	Kit
100 thru 127	941615
192 thru 233	941617

Note
Refer to parts drawing I-3487-S for models with plug-in feature.

For satisfactory service life of these components use full flow filtration to provide fluid which meets ISO cleanliness code 20/18/15 or cleaner. Selections from Eaton OFP, OFR, and OFRS series are recommended.

Printed in U.S.A.