Vickers®

Directional Controls

Smooth Shift Wet Armature Directional Valve

(F3)DG4S4-01*C-W3-BB-50-S410

Model	Spool	Diagram Plate	■ Spool Kit	⠿ Core Tube Kit
DG4S4-010C	463385	290341	940711	926547
DG4S4-012C	463387	290343	940713	
DG4S4-016C	463389	290345	940715	
DG4S4-018C	463391	290340	940717	926548
DG4S4-0133C	463392	577484	940718	

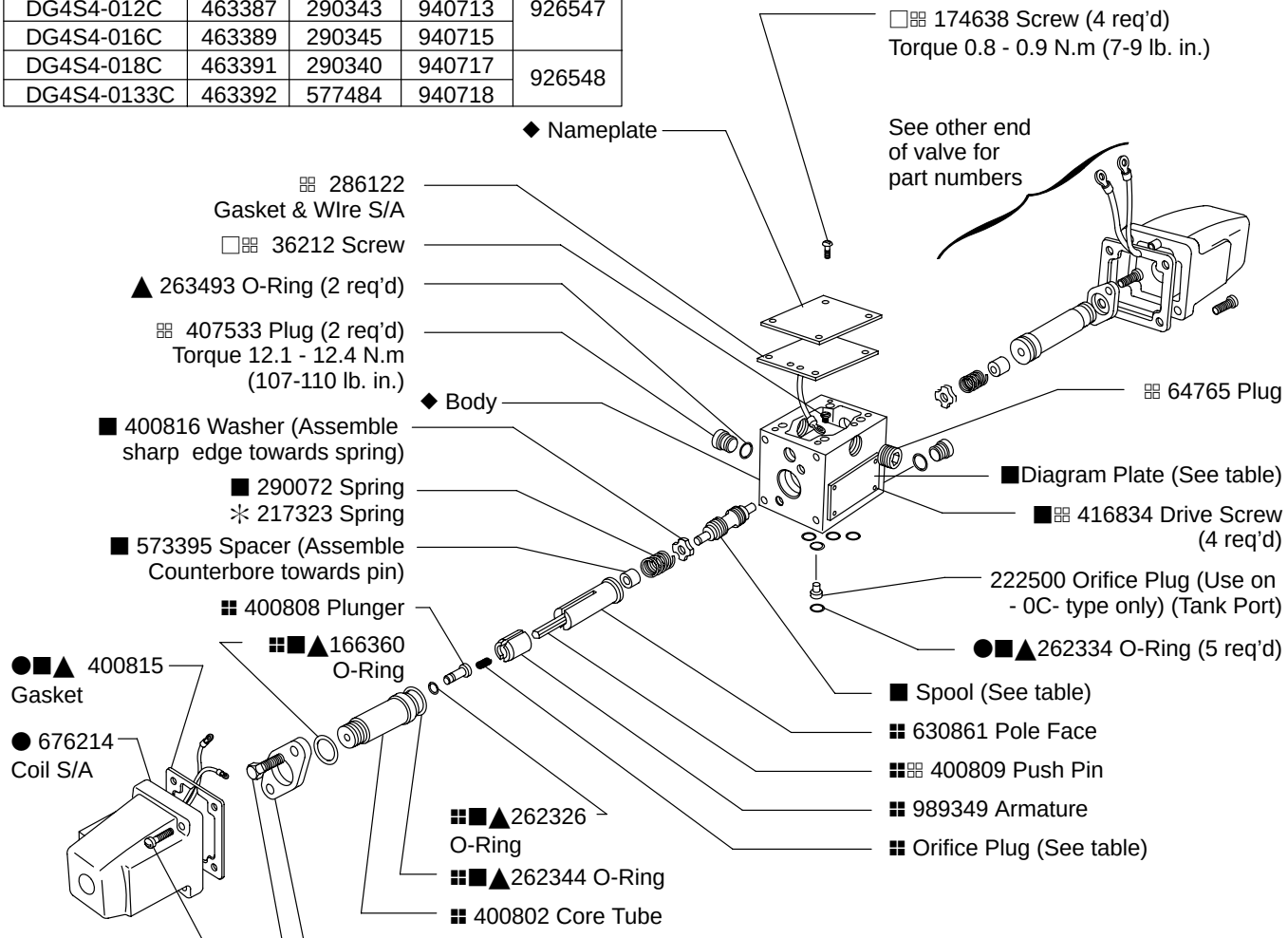

Spool Type	Orifice Plug
OC/2C/6C	989348
8C/33C	681679

▲ Included in F3 Seal Kit 920109

□ Included in Fastener Kit 926549

■ Included in Spool Kit

● Included in Coil Kit 926546

⠿ Included in Core Tube Kit

◆ Not Available for Sale

⠿ Available only in Kits of 25 each

✳ Use on -018C Models only

VICKERS

Model Code

(F3) - DG4S 4 * - 01 * C - W3 - BB - 50 - S410

1 2 3 4 5 6 7 8 9 10 11

1 **Seal Material**

F3 - Seals for mineral oil and fire resistant fluids

2 **Model Series**

DG4S4 - Directional valve, manifold or subplate mounted, solenoid operated, sliding spool

3 **Flow Direction**

4 - 4 way

4 **Solenoid Indicator Lights**

L - Light
(Omitted - None)

5 **Series (NFPA-D02 Interface)**

6 **Spool Type**

7 **Spring Centered**

8 **Wet Armature Type Solenoid**

W3 - Serviceable Core Tube S/A

9 **Special Solenoid**

(115 VAC 60 Hz)

10 **Design Number**

11 **Smooth Shift**

For Models with Solenoid Indicator Lights

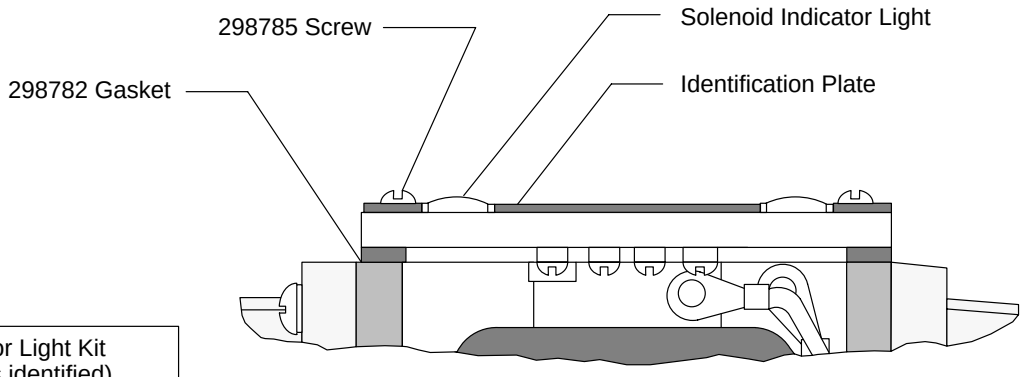

Solenoid Indicator Light Kit (Includes all parts identified)	
Voltage Range	Kit
100 thru 127	941615

NOTE

Refer to Parts Drawing I-3487-S for models with plug-in feature.

For satisfactory service life of these components, use full flow filtration to provide fluid which meets ISO cleanliness code 20/18/15 or cleaner. Selections from Eaton OFP,OFR and OFRS filter series are recommended.

Printed in U.S.A.