Vickers®

Service Data

Directional Controls

Wet Armature Directional Control Valves

DG4S*-01*N-(U)-*-60

COIL S/A	COIL KIT	VOLTAGE 60 HZ	VOLTAGE 50 HZ	DC VOLT	COIL CODE	DIN COIL-KIT	
868982	892995	120	110		B	893007	879141
868983	892996	240	220		D	893008	879143
868984	892997	460	440		M	893009	879231
868985	892998		127		EG	893010	879232
879211			240		ED		879142
879212			110		A		879144
879213			220		C		879227
879214			24		NN		879228
879215	893003	100	100		T	893015	879229
879216	893004	380	380		DZ	893016	879230
02–101843		24	24		N		02–101845
02–101976		200	200		OV		02–127060
868987	892999			12	G	893011	879146
868988	893000			24	H	893012	879147
868986	893001			48	J	893013	879148
868990				110	P		879226
868991				100	R		879225
868992	893002			250	X	893014	879224
879233				125	DP		879149
02-119664		48	48		K		02-127061
02-119665			48		KK		02-127062
02-119666		24			NV		02-127063
02-300515		220			DN		02-300519
02-300516		115			EK		02-300520
02-300517		110	100		BX		02-300521
02-300518		320	200		DX		02-300522

SPOOL TYPE	PART	SPOOL KIT
2 (DG4S2)	463393	892989
0	463385	892990
2	463387	892991
6	880886	892993
7	463390	892994
33	463392	892992

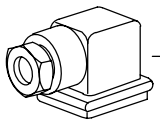

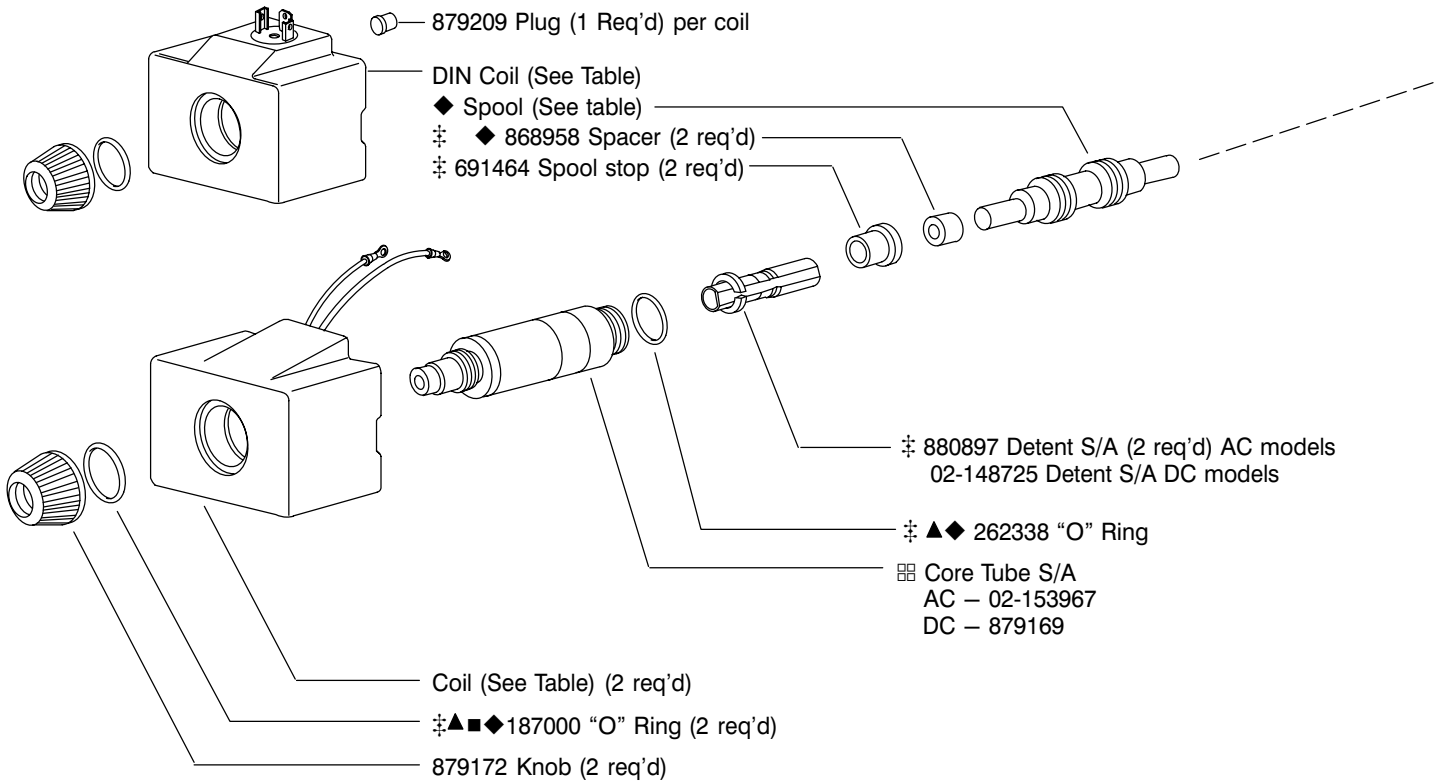

DC Coils with Surge Suppression Device Encapsulated			
Coil S/A	DC Voltage	DIN Coil S/A	Coil Code
02-154795	12	02-154798	G
02-154767	24	02-154796	H
Refer to model code for ordering with surge suppression.			

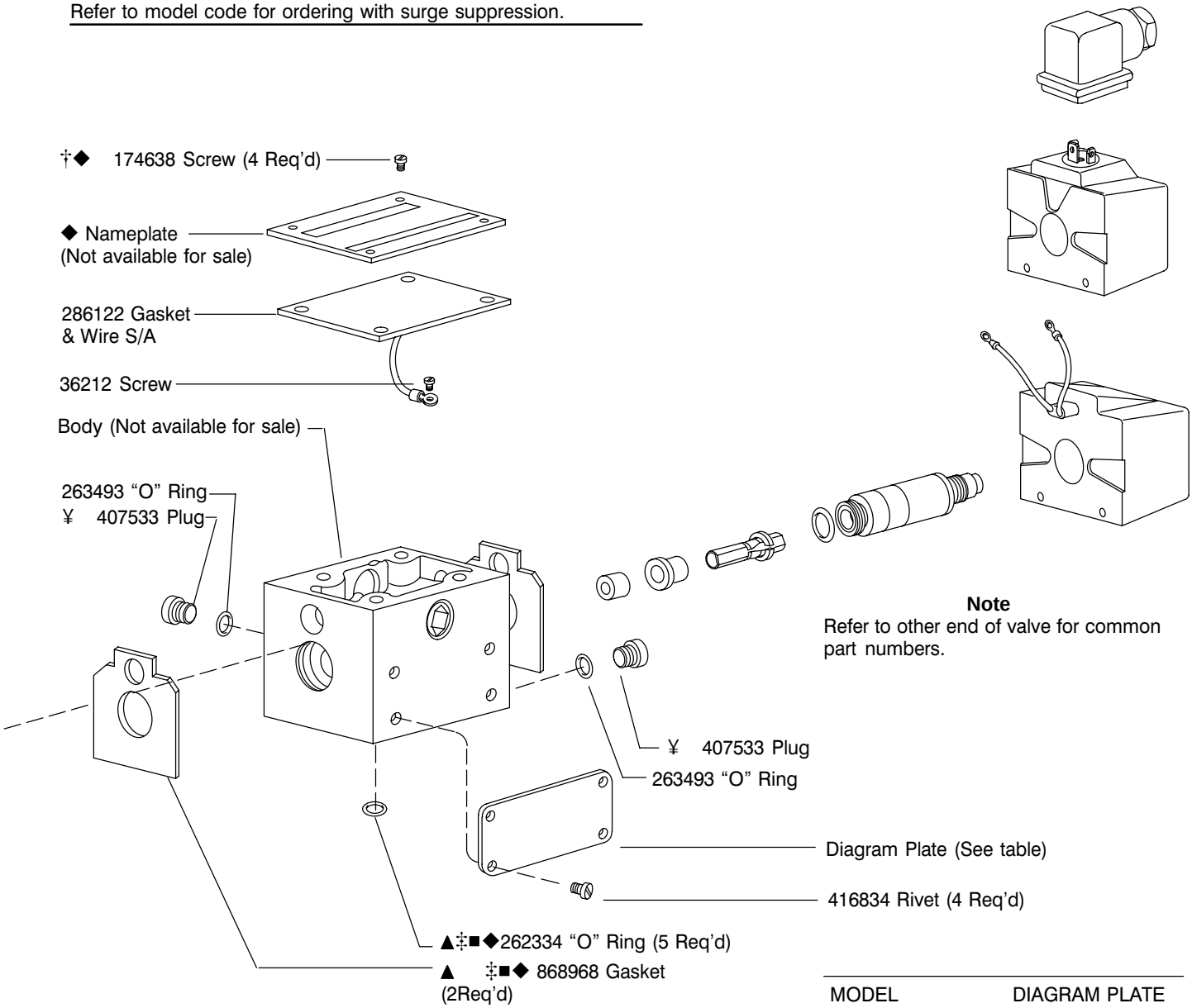

Note
Refer to other end of valve for common part numbers.

MODEL	DIAGRAM PLATE
DG4S2	577485
DG4S4	577486

▲ Included in F3 Seal Kit 892976
◇ Included in Fastener Kit 893005
‡ Included in Detent Kit 893006
◆ Included in Spool Kit
■ Included in Coil Kit
⁘ Rounded face on 868952 washer must mate with spool
⊞ Torque 24–29 N.m (18–22 lbf. ft.)
¥ Torque 12.1–12.4 N.m (107–110 lbf. in.)
† Torque 0.8–1.01 N.m (7–9 lbf. in.)

Model Code

(F3) D G 4 S 4 ** - 01 * N - (U) * - * - 60

1 2 3 4 5 6 7 8 9 10 11 12 13 14

1 **Special Seals**

Blank - Standard seals
F3 - Special seals

2 **Directional Control Valve**

3 **Manifold or Subplate Mounted**

4 **Solenoid Operated**

5 **Sliding Spool**

6 **Flow Direction**

2 - Two way
4 - Four way

7 **Electrical Accessories**

L - Solenoid indicator lights
W - Wiring housing
LW - Wiring housing with indicator lights
WT - Wiring housing with terminal strip

8 **Interface**

01 - ISO-4401-AC-50-4-A NFPA D05 ($^1/_8$ in. nominal size)

9 **Spool Types**

0, 2, 6, 7, 33 & 2 (two-way)

10 **Spool/Spring Arrangement**

N - No spring, detented

11 **Wet Armature Solenoid**
(non-serviceable core tube)

12 **Coil Type**

7 - Coil with surge suppression (DC models only 12 & 24V DC)

13 **Coil Identification Letters**

14 **Design**

Light Kits
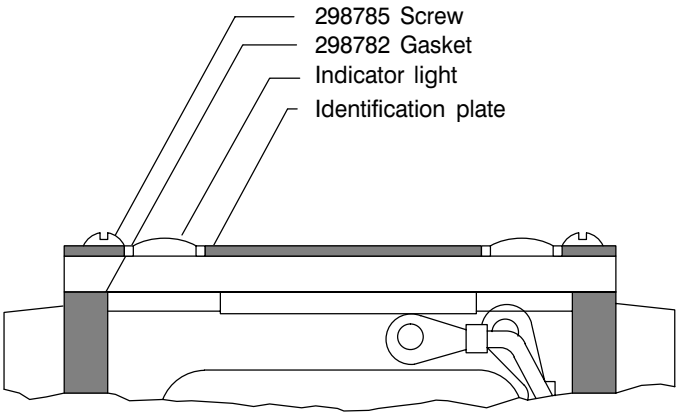
Solenoid Indicator Light Kit (Includes all parts identified)	
Voltage Range	Kit
100 thru 127	941615
192 thru 233	941617