Service Data

Vickers®

Directional Valves

Pilot Operated Directional Valves

(F*) - DG5V -10- * - (R) - (B) - **(L) - (**) - (X) - (*) - (E) - (T) - (*) - (V)M - (S*) - * ** * * (L) - (*) – ** - (***) - 10 - (EN*)**

Released 04/96

5007.06/EN/0496/S

Main stage spool type	Available valve type	Spool
0	A/B/C/D/N	02–317225
1/11		02–317226 *
2		02–317237
3/31 ☜ ◇		02–317227 *
4 ◇ ▶		02–317231
6		02–317238
7		02–317228
8 ◇ ▶		02–317233
9		02–317250
33		02–317234
52/521 ☜		02–317235 *
56/561 ☜		02–321158 *

*** Spool assembly note**

Assemble type 1 & 3 spools with narrow center land toward “A” end of valve. “A” end is defined as being closest to CYL. port “A”.
Assemble type 11 & 31 spools with narrow center land toward CYL. port “B”.
Assemble type 52 spool with narrow center land & type 56 spool with double lands toward CYL. port “B” .
Assemble type 521 spool with narrow land & type 561 spool with double lands toward CYL. port “A”.

◇ Spool types 4,8, & 31 are not available on “A” offset valve models.
▶ Spool types 4 & 8 are not available on “N” models with “A” or “W” pilot valves.

☜ Spool types 31,52,521,56, & 561 are not available on “D” pressure centered model valves.

☆ Spring Options

Part No.	Description
247287	**K**-0.3 bar (5 psi) spring
247288	**Q**-2.4 bar (35 psi) spring
276428	**R**-3.4 bar (50 psi) spring
432353	**S**-5.2 bar (75 psi) spring

Pilot attaching bolts

Pilot type	H or S	A or W
Pilot only	10358	1034
Pilot / choke	207897	10938
Pilot / reducer	207897	10940
Pilot / choke / reducer	417423	238151

Seal Kits

Location	Kit Number
Mainstage	02-329888
Mainstage F3	02-329889
Mainstage F6	02-329890
With ‘P’ Port Check	02-329891
With ‘P’ Port Check F3	02-329892
With ‘P’ Port Check F6	02-329893
Pressure Centered	02-329894
Pressure Centered F3	02-329895
Pressure Centered F6	02-329896

Arrangement for standard & check valve models.

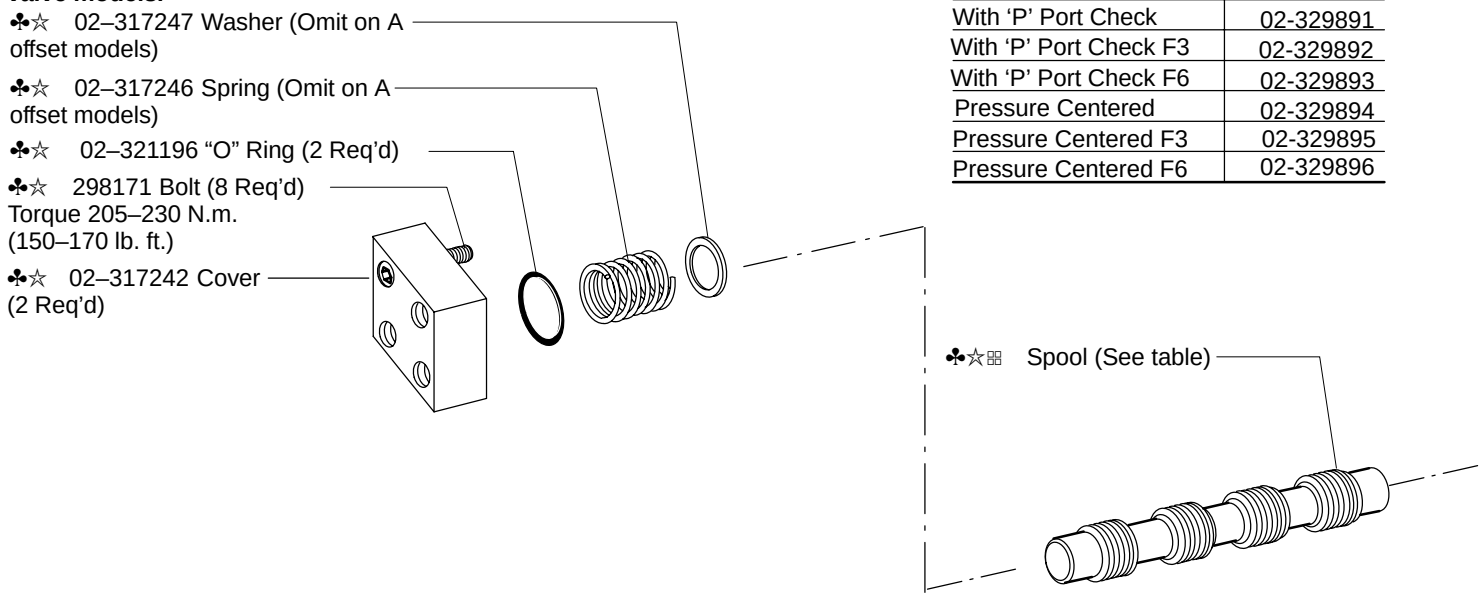

Arrangement for “D” pressure centered valve models.

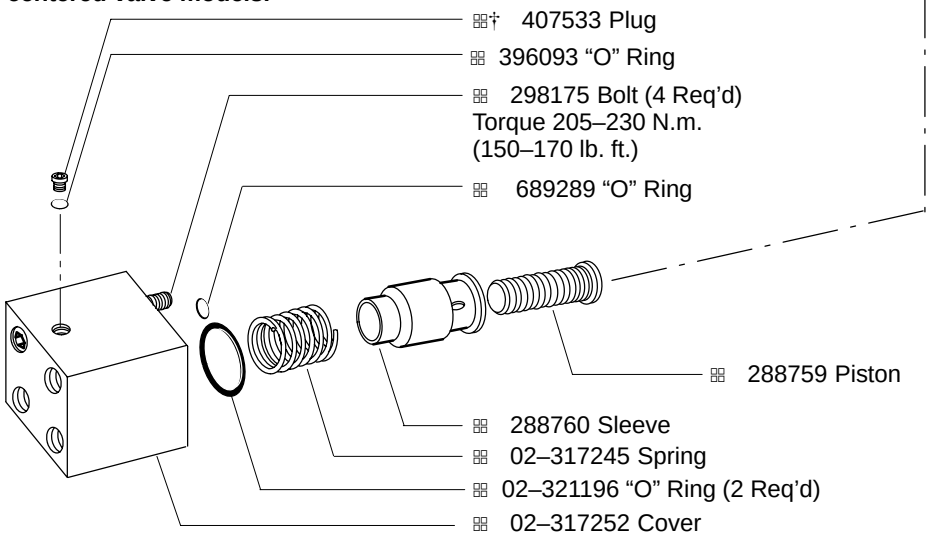

Note
Parts included in service kits are not sold separately.

† Plug torques oiled (See table).
♣ Used on standard models.
☆ Used on check valve models.
▦ Used on pressure centered valve.
■ Plug positions used on standard & check valve models only.
▦ Plug positions used on pressure centered valve models only.

©Eaton Hydraulics, Incorporated 2000
All Rights Reserved

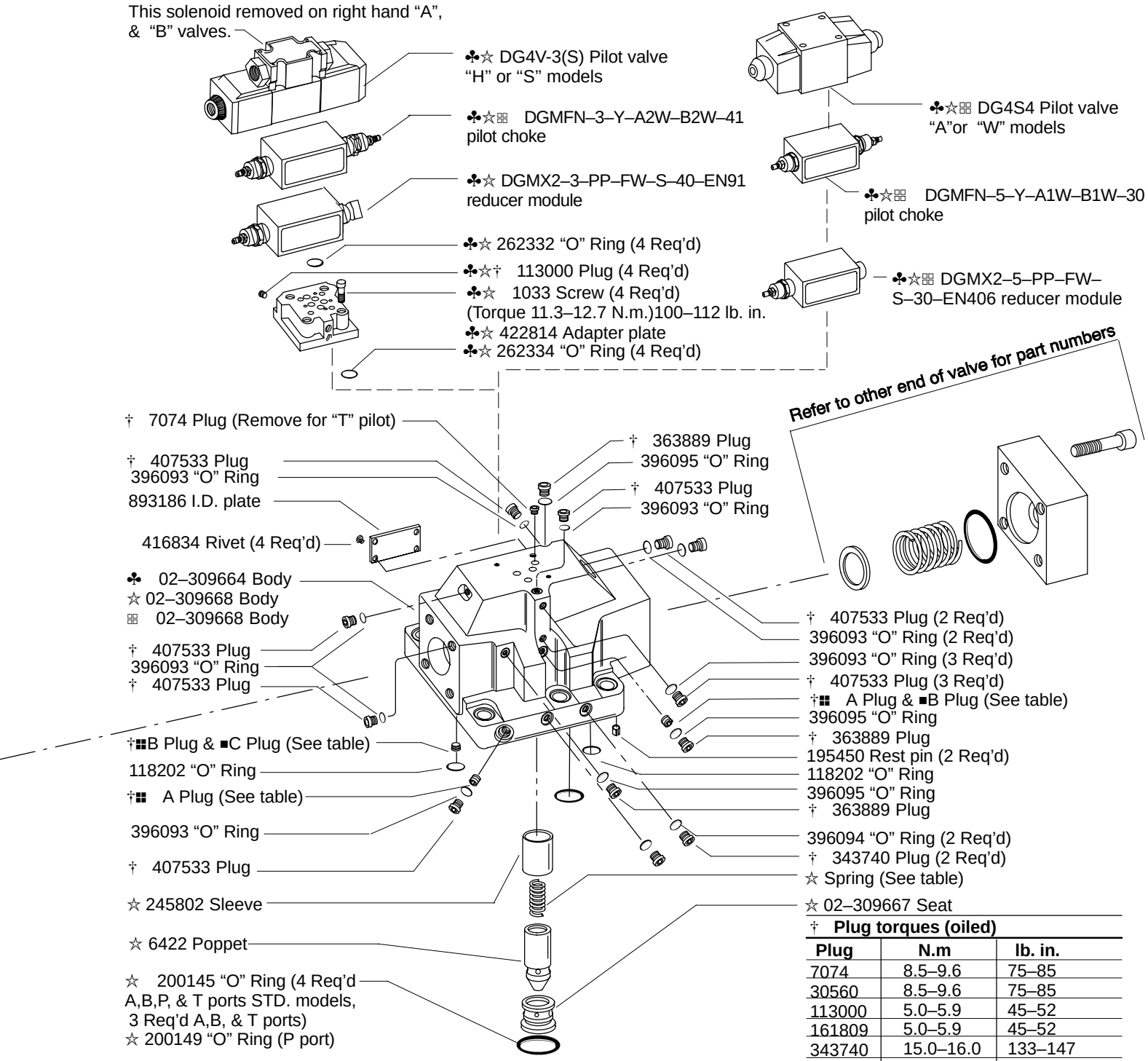

† Plug torques (oiled)

Plug	N.m	lb. in.
7074	8.5–9.6	75–85
30560	8.5–9.6	75–85
113000	5.0–5.9	45–52
161809	5.0–5.9	45–52
343740	15.0–16.0	133–147
363889	20.5–22.5	181–199
407533	12.1–12.4	107–110

■ Plug installation table (refer to model code breakdown page for more information)
DG5V–10–*–(R)–A/B/C/N–(L)–(**)–(X)–(*)–(E)–(T)–(K/Q/R/S)–10–(EN***)
9 11 13 25

Model	■ “A”plug	■ “B” plug	■ “C” plug
–10	———	30560	———
–E–10	———	7074	30560
–X–10	———	———	———
–X–E–10	———	7074	———
–K/Q/R/S–10	161809		———
–E–K/Q/R/S–10	113000		30560
–X–K/Q/R/S–10	———		———
–X–E–K/Q/R/S–10	113000		———

▦ Plug installation table (refer to model code breakdown page for more detail)
DG5V–10–*–D*–(X)–(*)–(E)–10–(EN***)
6 9 11 25

Model	▦ “A”plug	▦ “B” plug
D–10	226987	———
D–E–10	7074	226987
DA–10	30560	———
DA–E–10	7074	30560
DA–X–10	———	———
DA–X–E–10	7074	———
DB–10	224026	———
DB–E–10	7074	224026

Note

SAE straight thread plugs used on exterior of valve.

Note

All internal seals of the mainstage are F3 (Viton®). Mounting face seals are standard (Buna-N). F6 seal are special (Nitrile) and are used throughout the valve assembly.

® *Viton is a registered trademark of E.I. DuPont*

Valve model code	Main stage spool type	Pilot valve model code
DG5V–10–A/W–(R)–*A–*	All except 4 & 8	DG4S4–012A–*
	4 & 8 only	DG4S4–0128A–*
DG5V–10–A/W–(R)–*B–*	All except 4 & 8	DG4S4–016B–*
	4 & 8 only	DG4S4–0168B–*
DG5V–10–A/W–(R)–*C–*	All except 4 & 8	DG4S4–016C–*
	4 & 8 only	DG4S4–0168C–*
DG5V–10–A/W–(R)–*D–*	0,1,2,3,4,6,8,9,11,33	DG4S4–017C–*
	4 & 8 only	DG4S4–0178C–*
DG5V–10–A/W–(R)–*N–*	All except 4 & 8	DG4S4–012N–*
DG5V–10–H/S–(R)–*A–*	All except 4 & 8	DG4V–3(S)–2A–*
	4 & 8 only	DG4V–3(S)–2AL–VM–*
DG5V–10–H/S–(R)–*B–*	All except 4 & 8	DG4V–3(S)–6B–*
	4 & 8 only	DG4V–3(S)–6BL–VM–*
DG5V–10–H/S–(R)–*C–*	All except 4 & 8	DG4V–3(S)–6C–*
	4 & 8 only	DG4V–3(S)–6C–VM–*
DG5V–10–H/S–(R)–*N–*	All except 4 & 8	DG4V–3(S)–6N–*
	4 & 8 only	DG4V–3(S)–6N–VM–*

Spool Orientation Table

P/N 02-317225 Type “0”	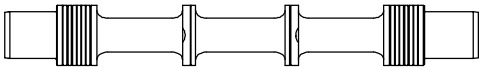	P/N 02-317250 Type “9”	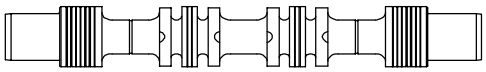
P/N 02-317226 Type “1”	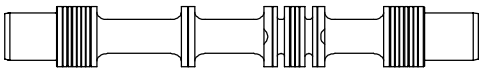	P/N 02-317226 Type “11”	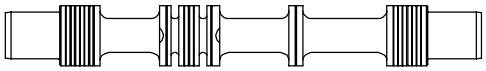
P/N 02-317237 Type “2”	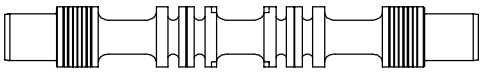	P/N 02-317227 Type “31”	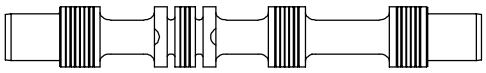
P/N 02-317227 Type “3”	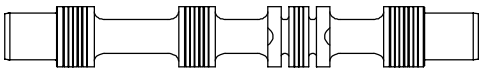	P/N 02-317234 Type “33”	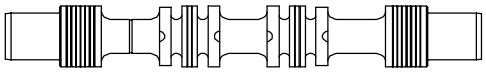
P/N 02-317231 Type “4”	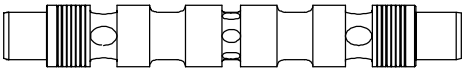	P/N 02-317235 Type “52”	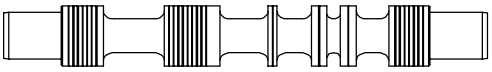
P/N 02-317238 Type “6”	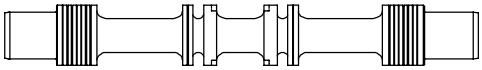	P/N 02-317231 Type “521”	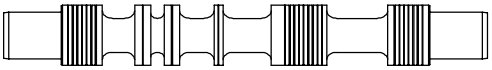
P/N 02-317228 Type “7”	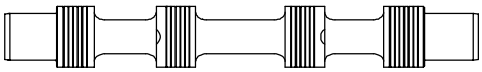	P/N 02-321158 Type “56”	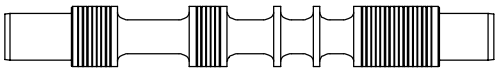
P/N 02-317233 Type “8”	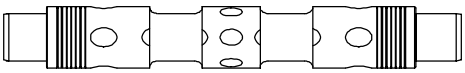	P/N 02-321158 Type “561”	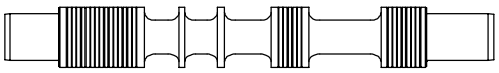

Stroke Adjustment Option

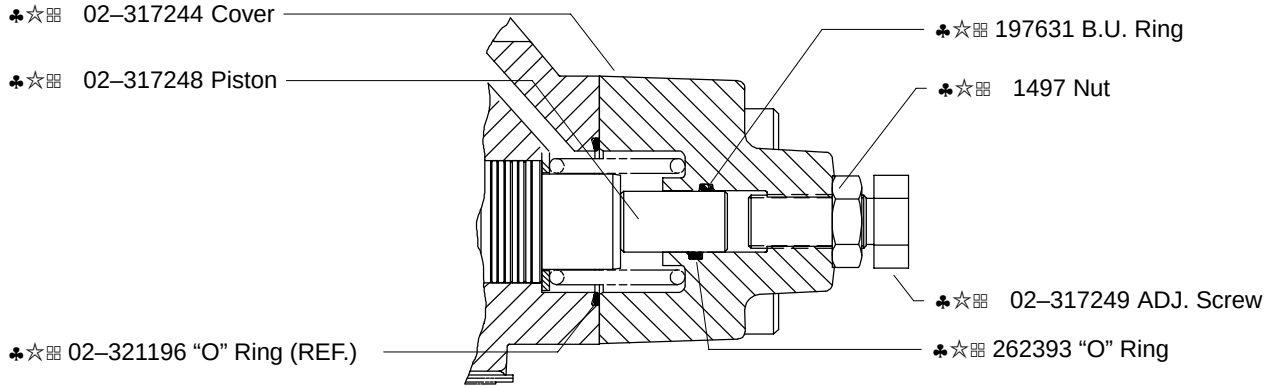

Model Code

(F*) - DG5V -10- * - (R) - (B) - ** (L) - (**) - (X) - (*) - (E) - (T) - (*) - (V)M - (S*) - * ** * * (L) - (*) - ** - (***) - 10 - (EN*)**

1 2 3 4 5 6 7 8 9 10 11 12 13 14 15 16 17 18 19 20 21 22 23 24 25 26 27 28

1 Special Seals

(Omit if not required)
F3 - Seals for fire resistant fluids
F6 - Seals for water glycol

2 Directional Control Valve

DG5V - Subplate mounting; solenoid controlled; pilot operated. Pressure rating 350 bar (5000 psi) for P, A, & B ports.

3 Valve Size

10 - Valve size CETOP 10, NFPA D10

4 Pilot Valve Type

H - CETOP 3 mounting pattern, High performance
S - CETOP 3 mounting pattern, Std. performance
A - CETOP 5 mounting pattern, Air gap
W -CETOP 5 mounting pattern, Wet armature

5 Reducer Module

(Omit if not required)
R - A (air gap) and W (wet armature) piloted models when pilot pressure exceeds 210 bar (3000 psi)

6 Gauge Ports

Blank - .4375-20 UNF-2B Thread
B -$^{1}/_{4}$ BSP Thread

7 Spool Types

0 - Open to T all ports
1 - Open P&A to T, closed B
2 - Closed to T all ports
3 - Closed P&B, open A to T
4 - Tandem P to T, closed crossover
6 - Closed P only, open A&B to T
7 - Open P to A&B, closed T
8 - Tandem P to T, open crossover
9 - Open to T all ports over tapers
11 - Open P&B to T, closed A
31 - Closed P&A, open B to T
33 - Closed P, open A&B to T over tapers
52 - Closed center, regen. by sol. 'A'
56 - A&B to T, P blocked, regen. by sol. 'A'
521 - Closed center, regen. by sol. 'B'
561 - A&B to T, P blocked, regen. by sol. 'B'

8 Spool/Spring Arrangement

A - Spring offset
B - Spring centered with solenoid 'A' removed
C - Spring centered
D - Pressure centered 210-350 bar (2000-3000 psi)
DA - Pressure centered 20-70 bar (300-1000 psi)
DB - Pressure centered 70-210 bar (1000-2000 psi)
N - No–spring detented

9 Left Hand Build

L - Single solenoid models only, omit if not required.

10 Manual Override Options

CETOP 3 piloted models only, omit if not required.
Blank - Plain override in solenoid ends only.
H - Waterproof override in solenoid ends only.
H2 - Waterproof override in both ends of single solenoid.
P2 - Plain override in both ends of single solenoid.
Y - Lockable manual override in solenoid ends only.
Z - No override in either end.

11 Fast Response

X - (Omit for standard internal pilot pressure models)

12 Spool Control Modifications

(Omit if not required)
1 - Stroke adjustment (both ends) (available on B, C, & N models)
2 - Pilot choke adjustment (available on all models)
3 - Pilot choke and stroke adjustments (both ends) (available on B, C, & N models)
7 - Stroke adjustment on cylinder 'A' end only (available on A, B, C, & N models)
8 - Stroke adjustment on cylinder 'B' end only (available on AL, B, C, N, & D(*) models)
2-7 - If both are required (available on A, B, C, & N models)
2-8 - If both are required (available on AL, B, C, N, & D(*) models)

13 External Pilot Pressure

E - External pilot pressure. Omit for internal pilot pressure models.

14 Internal Pilot Drain

T - Internal pilot drain to 'T' port. Omit for internal pilot pressure models.

15 Check Valve in Pressure Port

(Omit if not required)
Not available for D(*) models.
K - 0,3 bar (5 psi) check
Q - 2,5 bar (35 psi) check
R - 3,5 bar (50 psi) check
S - 5, bar (75 psi) check

Model Code (continued)

(F*) - DG5V -10- * - (R) - (B) - ** (L) - (**) - (X) - (*) - (E) - (T) - (*) - (V)M - (S*) - * ** * * (L) - (*) - ** - (***) - 10 - (EN*)**

1 2 3 4 5 6 7 8 9 10 11 12 13 14 15 16 17 18 19 20 21 22 23 24 25 26 27 28

16 Solenoid Energization Identity

Blank - Standard arrangement for ANSI B93.9 (i.e. energize solenoid A to follow flow P to A).
V - Solenoid identification determined by position of solenoid (i.e. solenoid A at port A end/solenoid B at port B end).

Note

4 and 8 type spools are always V. Solenoid energization identity is independent of mainstage porting.

17 Heading Electrical Flag Symbol

M - Features and options for pilot valve.

18 Pilot Valve Monitoring Switch

(Omit if not required)

S - Indicator switch (A & W piloted models only)
S3- Limit switch normally open, wired to electrical connector with PA/PB/PA5 (H piloted models only)
S4- Limit switch normally closed, wired to electrical connector with PA/PB/PA5 (H piloted models only)
S5- Limit switch - FW, FJ (H piloted models only)
S6- Position switch with U coils (H piloted models only)

19 Coil Type

F - Flying lead (required for wiring housing option)
KU - Top exit flying lead (H & S piloted models only)
P - Plug in (H & S piloted models only)
SP1- Single 6.3mm spade (H & S piloted models only)
SP2- Dual 6.3mm spade (H & S piloted models only)
U - ISO 4400 (DIN 43650)
X - Explosion proof solenoids ('A' piloted models only)
X1 - Flameproof solenoids BASEEFA/CENELEC (S piloted models only)
X2 - Explosion proof solenoids CSA/UL (S piloted models only)
X3 - Explosion proof solenoids BASEEFA ExS (S piloted models only)

20 Electrical Connections

(F type coils only, omit if not required)

PA - Insta–plug, male receptacle only
PB - Insta–plug, male and female receptacle
PA3- 3–pin connector
PA5- 5–pin connector
T - Wired terminal block (wiring housing option also required)

21 Wiring Housing

Blank - Optional for A & W piloted models only
W - 1/2" NPT threaded connection
J - 20mm threaded connection

22 Electrical Options

(Omit if not required)
U-type coils only

1- Fitted connector
2- Fitted connector and variable grommet
3- Fitted connector with lights

23 Solenoid Indicator Lights

(Omit if not required)

24 Surge Suppressor/Damper

DC voltages only, omit if not required.
For H, S, & W piloted models only.

D1- Encapsulated diode (industrial applications)
D2- Encapsulated diode (mobile applications)
D7- Encapsulated transzorb

25 Coil Voltage Identification Letter

26 Pilot Valve Port Orifices

For H & S piloted models only, omit if not required.

27 Design Number

28 Special Modifications

(Omit if not required)

Printed in U.S.A.