Service Data

Vickers®

Directional Controls

Solenoid Controlled Pilot Operated Directional Valve

DG5S-4-*D(L)-(*)(X)-(*)-(E)-(T)(*)-(V)M-(S*)-*(**)**(L)-***-***-30/40

Parts shown included in stroke adjuster kit 941154. Stroke adjuster cylinder ”B” end only.

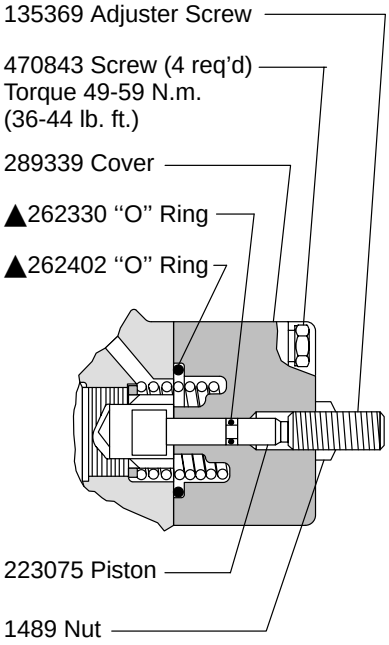

Main Stage Spool Type	Spool	ID Plate
DG5S-8-0D	363495	400967
DG5S-8-1D	*276623	400968
DG5S-8-2D	363496	400969
DG5S-8-3D	*276625	400970
DG5S-8-4D	276626	400971
DG5S-8-6D	363498	400972
DG5S-8-8D	363499	400971
DG5S-8-9D	363500	400967
DG5S-8-11D	*276623	573685
DG5S-8-31D	*276625	573685
DG5S-8-33D	363501	400972

***Spool Assembly Note**

Assemble type ”1” and ”3” spools with narrow center land toward ”A” end of valve. ”A” end of valve is defined as being closest to cylinder port ”A”. Type ”11” and ”31” spools are installed in reverse of type ”1” and ”3”, with narrow center lands toward ”B” end of valve.

Valve Model Code	Main Stage Spool Type	Pilot Valve Model Code
DG5S-8-*D-30	0, 1, 2, 3, 6, 9, 11, 31, 33	DG4V-3S-7C-60
DG5S-8-*D-40		DG4V-3-7C-60
DG5S-8-*D-30	4 & 8	DG4V-3S-78C-60
DG5S-8-*D-40		DG4V-3S-78C-60

See pilot valve service drawing for parts breakdown.

■Plug	Torques (oiled)	
	N.m.	lb. in.
113000	5.0-5.9	45-52
237588		
343740	15.0-16.0	133-142
398071	9.8-10.2	87-90
407533	12.1-12.4	107-110

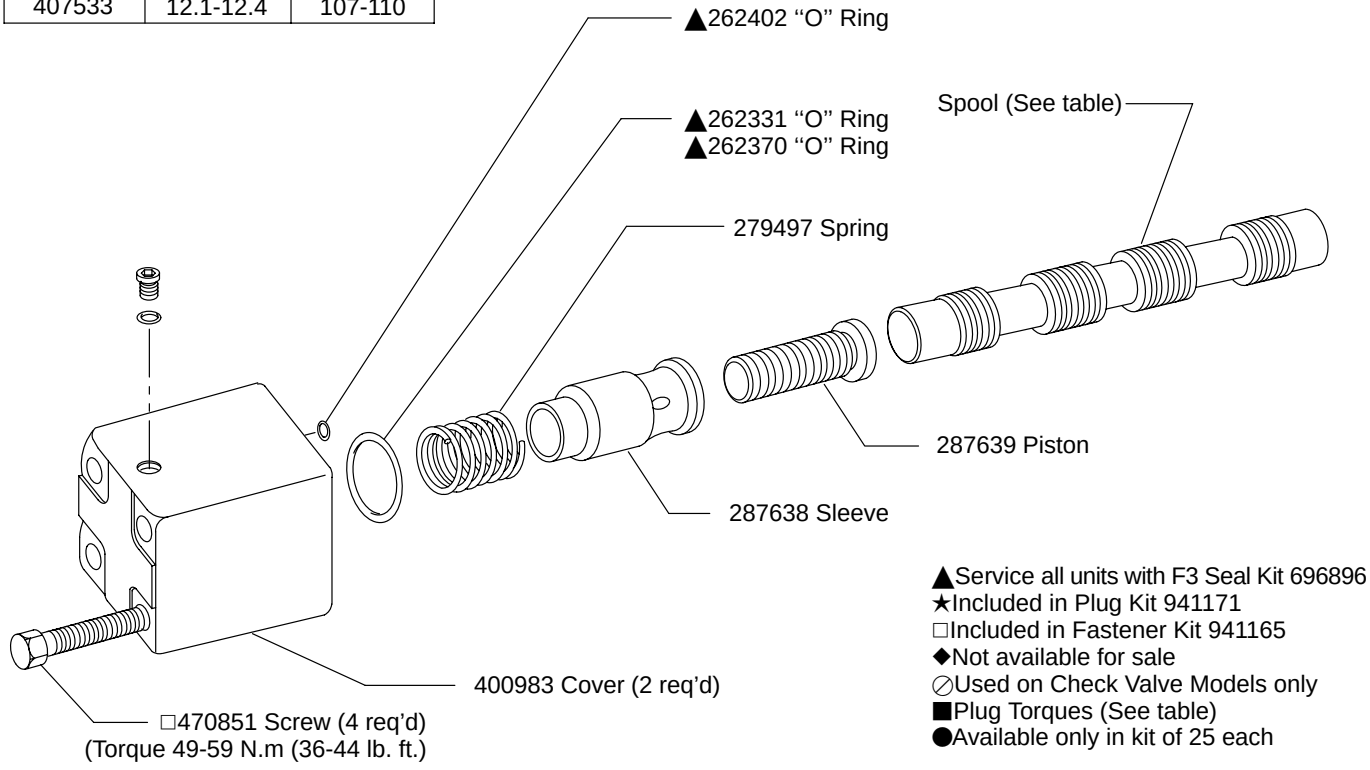

▲Service all units with F3 Seal Kit 696896
★Included in Plug Kit 941171
□Included in Fastener Kit 941165
◆Not available for sale
⊘Used on Check Valve Models only
■Plug Torques (See table)
●Available only in kit of 25 each

© Eaton Hydraulics, Incorporated 2000
All Rights Reserved

Pilot Stage Bolt Kit (includes 4 attaching bolts)	
Model	Bolt Kit
Without Pilot Choke	696892
W/Pilot Choke	696893
(Torque to 4.5-5.7 N.m)(39.8-50.4 lb. in.) See pilot choke service drawing for parts breakdown.	

■ Plug Installation Table			
Model	"A" Plug	"B" Plug	"C" Plug
DG5S-8-*D-**	Does Not Exist	237588	—
DG5S-8-*D-**-E		113000	237588
DG5S-8-*D-**-X		—	—
DG5S-8-*D-**-X-E		113000	
DG5S-8-*D-**-KRS	237588	Does Not Exist	
DG5S-8-*D-**-E-KRS	113000		237588
DG5S-8-*D-**-X-KRS	—		—
DG5S-8-*D-**-X-E-KRS	113000		
113000 Solid Plug			237588 Orifice Plug

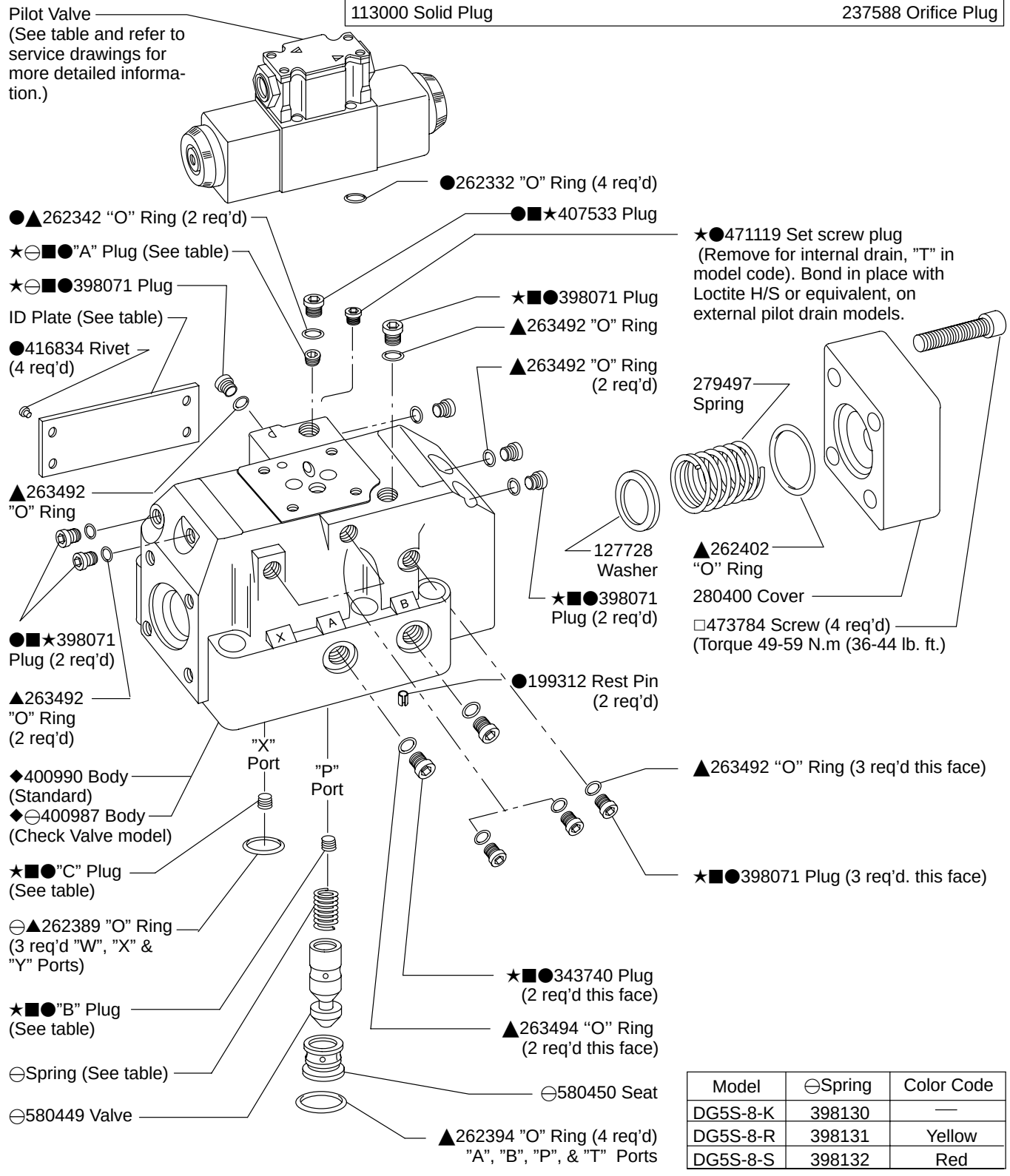

Model	⊖Spring	Color Code
DG5S-8-K	398130	—
DG5S-8-R	398131	Yellow
DG5S-8-S	398132	Red

Model Code

(F3) DG5S-8- *D(L) (*) (X)-(*)-(E)-(T)(*)-(V)M-(S*)*(**) **(L)- 5-***-30/40**

1 2 3 4 5 6 7 8 9 10 11 12 13 14 15 16 17 18 19 20 21 22 23 24

1 Seal Material

F3 - Seals for mineral oil and fire resistant fluids

2 Model Series

DG5S - Directional control valve, manifold or subplate mounted, solenoid controlled pilot, operated, rated pressure 210 Bar (3000 psi)

3 Interface

8 - NFPA-D06 (ISO-4401-08)

4 Spool Type

(See table)

5 Spool/Spring Arrangement

D - Pressure centered

6 Left Hand Assembly

L - Left hand (single solenoid only)
Blank - Omit when not required

7 Manual Override option

Blank - Plain override solenoid ends only
H - Waterproof override solenoid ends only
H2 - Waterproof override both ends of single solenoid
P2 - Plain override both ends of single solenoid
Y - Lockable manual overrides solenoid ends only/DC only
Z - No overrides in either end

8 Response Type

X - Fast response
Blank - Standard low shock models

9 Spool Control Modifications

2 - Pilot choke adjustment
8 - Stroke adj cylinder "B" end
2–8 - Dual pilot choke & stroke adjustment port "B" end only
Blank - Omit when not required

10 Pilot Pressure

E - External pilot pressure
Blank - Internal pilot pressure

11 Pilot Drain

T - Internal pilot drain
Omitted - External pilot drain

12 Pressure Port Check Valve

K - 0.35 bar (5psi) cracking pressure
R - 3.45 bar (50psi) cracking pressure
S - 5.20 bar (75psi) cracking pressure
Blank - Omit when not required

13 Solenoid Energization Identity

Blank - Standard arrangement for ANSI, B93.9 (energise solenoid "A" for flow "P" to "A" port)
V - Solenoid identification determined by positiion of solenoid. (Solenoid "A" at port "A" end and/or solenoid "B" at port "B" end. All 4 & 8 spools are always V code.)

14 Flag Symbol

M - Electrical options & features

15 Spool indicator switch
(Available on high performance models, DG4V-3 only.)
Omit when not required.

S1 - Options available on U only
S2 - Options available on U only
S3 - Options available on P* only
S4 - Options available on P* only
S5 - Options available on FW/FJ only

16 Coil Type

U - ISO 4400
F - Flying lead
SP1 - Single 6,3MM spade to IEC760
SP2 - Dual 6,3MM spade to IEC760

17 Electrical Connections
(F type coil only) Omit if not required.

T - Wired terminal block
PA - Instaplug male receptacle only
PB - Instaplug male & female receptacle
PA3 - Three pin connector
PA5 - Five pin connector

18 Housing
(F type coil only)

W – 1/2 NPT thread wiring housing
J - 20 MM thread wiring housing

19 Electrical Options

1 - ISO with fitted plug, U type coils only
6 - ISO with fitted plug, & lights U type coils only

20 Solenoid Indicator Lights
(F build only) used with T terminal block models. (Omit if not required)

21 Coil Identification

22 Pilot Valve Code (tank pressure rating)

2 - 10 bar (145 psi) DG4V3-60
5 - 100 bar (1450 psi) DG4V3S-60
6 - 160 bar (2285 psi) DG4V3-60
7 - 210 bar (3000 psi) DG4V3-60

23 Pilot Valve Port Orifices

24 Design

30 – DG4V3S-60 pilot valve
40 – DG4V3-60 pilot valve

6 Thru 23 included in pilot valve model code

For satisfactory service life of these components in industrial applications, use full flow filtration to provide fluid which meets ISO cleanliness code 18/15 or cleaner. Selections from Eaton OFP, OFR, and OFRS series are recommended.

Printed in U.S.A.