Service Data

Vickers®

Directional Controls

Wet Armature Solenoid Controlled Pilot Operated Directional Valves

DF5S4-16*A-*-(E)-W(3)-*-53
DF5S4-16*B-*-(E)-W(3)-*-53
DF5S4-16*C-*-(E)-W(3)-*-53
DF5S4-16*N-*-(E)-W(3)-*-53

Revised 12/01/87

I–3623-S

Note
See model code page for solenoid indicator light parts.

Note
Parts included in service kits not sold separately.

Pilot Attaching Parts	
Model	Bolt Kit
W/Out Pilot Choke	255633
W/Pilot Choke	255654
Torque to 11.3 -12.65 N.m (100-112 lb. in.)	

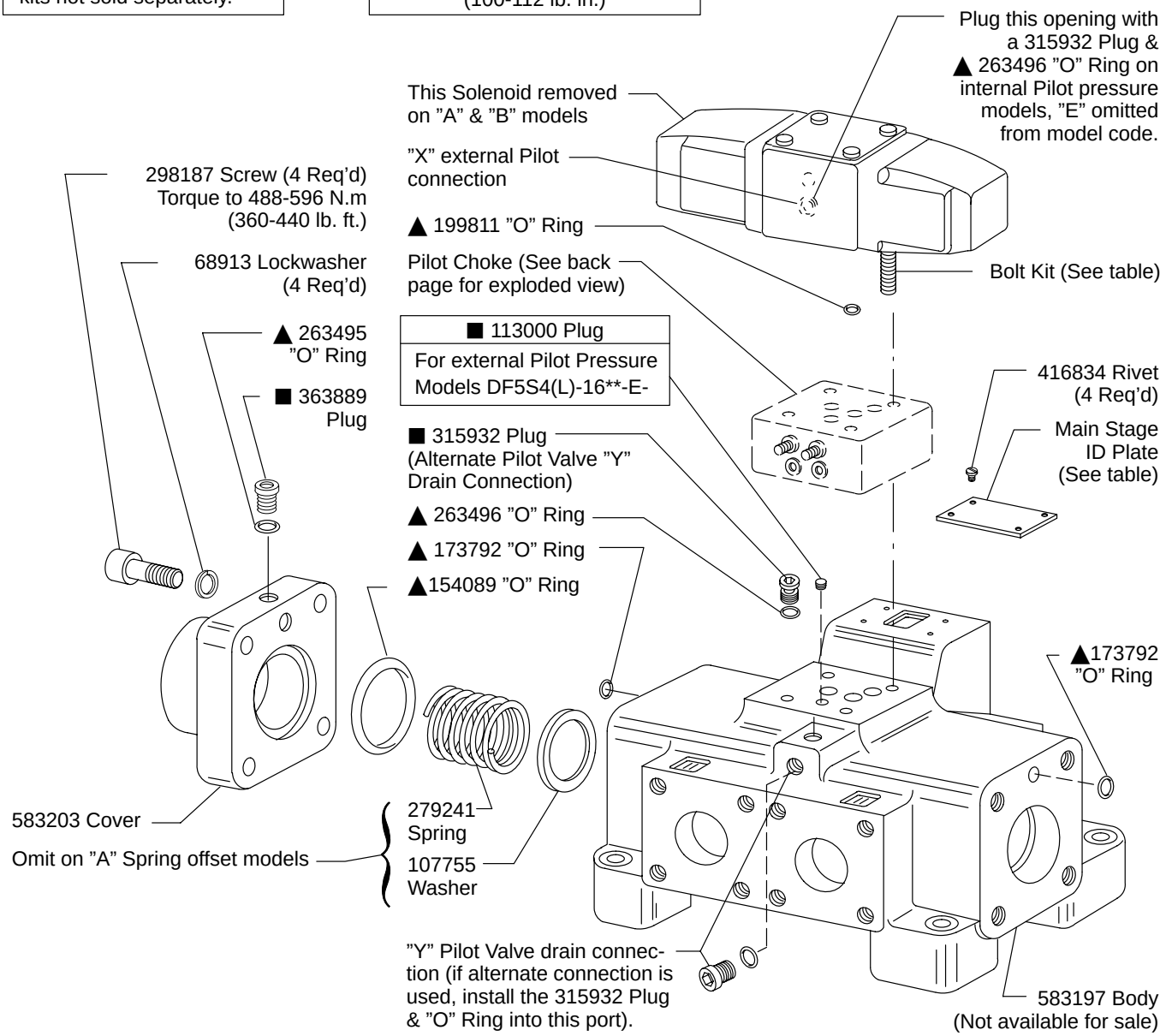

Assemble type 4 & 8 Spools with wide undercut toward "A" end.

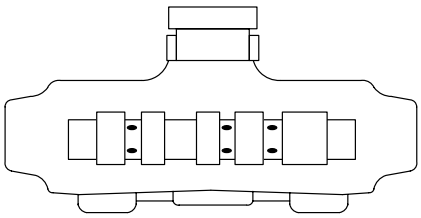

Assemble type 1 & 3 Spools with taper toward "B" end. Type 31 Spool is assembled with taper toward "A" end.

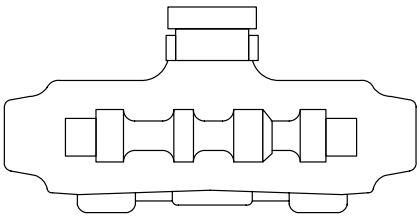

Spool Assembly

▲ Included in Seal Kit 919405
F3 equivalent Seal Kit 919434
■ Plug Torques (See table)

Valve Model Code	Main Stage Spool Type	Pilot Valve Model Code	Parts Drawing See Note
DF5S4-16*A-*-53	0, 2, 6, 9, 33	DG4S4-012A-W-*-50-S344	I-3557-S
DF5S4-16*B-*-53	0, 1, 2, 3, 6 9, 31, 33	DG4S4-016B-W-*-50-S344	I-3558-S
	4 & 8	DG4S4-0168B-W-*-50-S344	
DF5S4-16*C-*-53	0, 1, 2, 3, 6 9, 31, 33	DG4S4-016C-W-*-50-S344	
	4 & 8	DG4S4-0168C-W-*-50-S344	
DF5S4-16*N-*-53	0, 2, 6, 9, 33	DG4S4-012N-W-*-51-S344	I-3559-S
Note The -S344 Pilot Valve is the same as the valve shown on the tabulated parts drawing except: 434286 body replaces 400817 body. 407533 Plug & 263493 ”O” Ring are omitted.			

Valve Model Code		Spool	Main Stage ID Plate w/Circuit Diagram	
Main Stage	Valve Type		”A” only	B/C/N
DF5S4-160-	A/B/C/N	273677	400975	400976
DF5S4-161-	B/C	*386581		400977
DF5S4-162-	A/B/C/N	273676		400978
DF5S4-163-	B/C	*275803		400979
DF5S4-164-	B/C	*273720		400980
DF5S4-166-	A/B/C/N	275804		400981
DF5S4-168-	B/C	*275805		400980
DF5S4-169-	A/B/C/N	275806		400976
DF5S4-1631-	B/C	*275803		580475
DF5S4-1633-	A/B/C/N	317777		400981
*See Spool Assembly View				

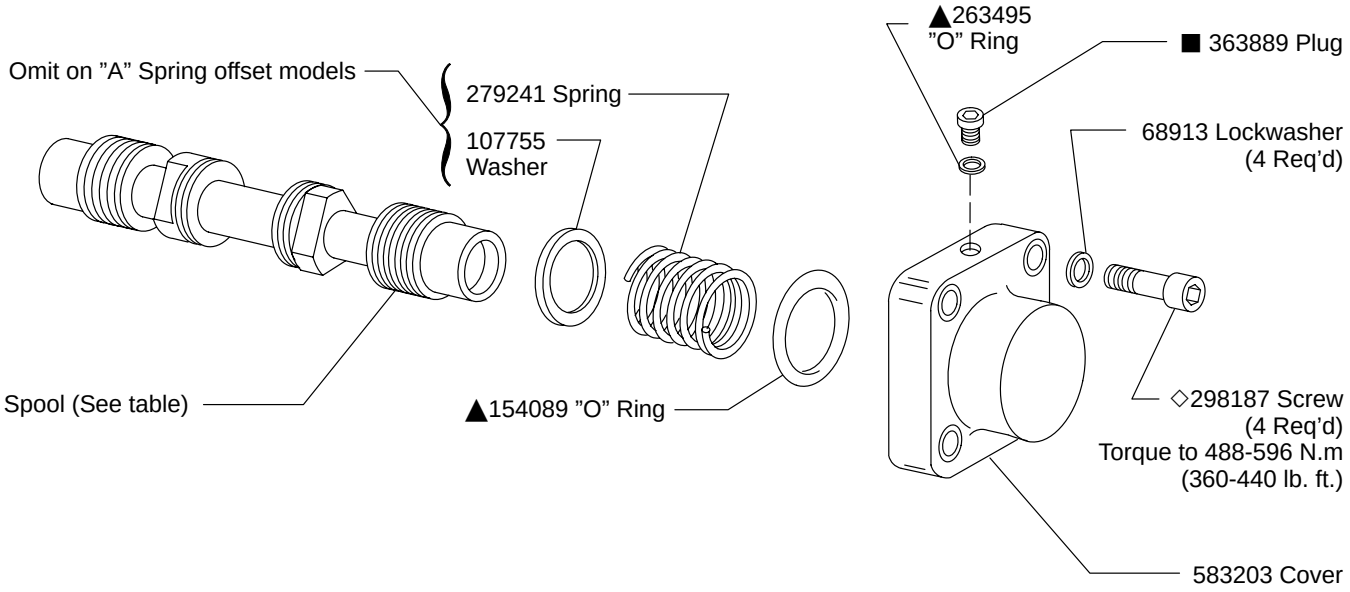

Model Code

DGMFN-5-Y-AW-BW-20

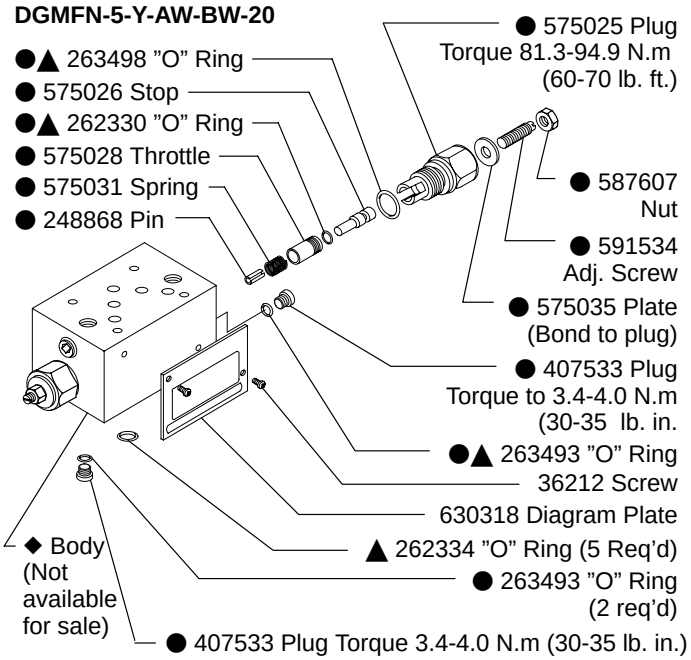

Stroke Adjustment Parts

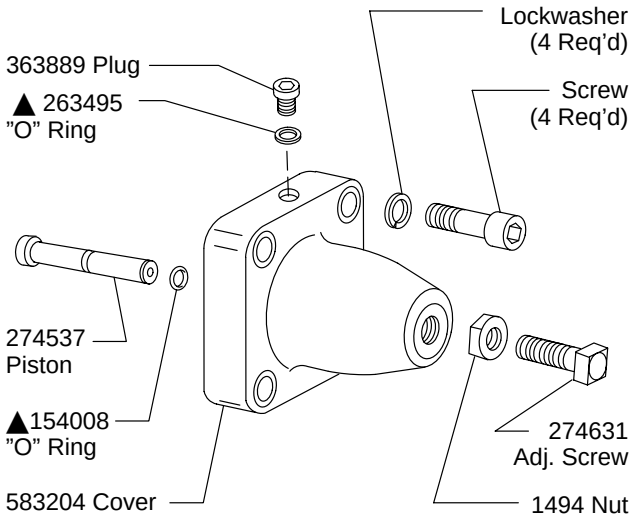

▲ Included in F3 seal kit 920246 | ● Qty. 2 Required

(F3) (P) DF5S 4 (L) - 16 * * - * - (E) - W(3) - * - 53**

1 2 3 4 5 6 7 8 9 10 11 12 13

1 Seal Material

F3 - Seals for mineral oil and fire resistant fluids

2 Electrical Plug Feature

(See note below)

3 Model Series

DF5S - Directional valve, flange connection, solenoid controlled, sliding spool

4 Flow Direction

4 - 4 way

5 Indicator Lights

L - Solenoid indcator lights
Omitted - None

6 Valve Size

160 Series (2.00 inch)

7 Type of Main Stage Spool

8 Valve Type

A - Spring offset
B - Spring centered (one solenoid)
C - Spring centered
N - Detented

9 Spool Control Modification (Omit if not required)

1 - Stroke adjustments
2 - Pilot choke
3 - Pilot choke & stroke adjustment
7 - Stroke adjustment "A" end only
8 - Stroke adjustment "B" end only

10 Pilot Pressure

E - External
Omitted - Internal pilot pressure

11 Core Tube

W - Non-serviceable core tube in pilot
W3 - Serviceable core tube in pilot

12 Coil Identification Letter

13 Design

Electrical Plug Feature (Omit if not required)

PA - Insta-Plug, male receptacle only
PB - Insta-Plug, male & female receptors
PA3 (3 pin) & **PA5** (5 pin) - receptacles that meet NFPA hydraulic valve electrical standard T3. 5.29M-1980.

For satisfactory service life of these components, use full flow filtration to provide fluid which meets ISO cleanliness code 20/18/15 or cleaner. Selections from Eaton OFP, OFR, and OFRS series are recommended.

Printed in U.S.A.