Rotary Type Pilot Valves

C2-529-* Series
C2-1529-* Series

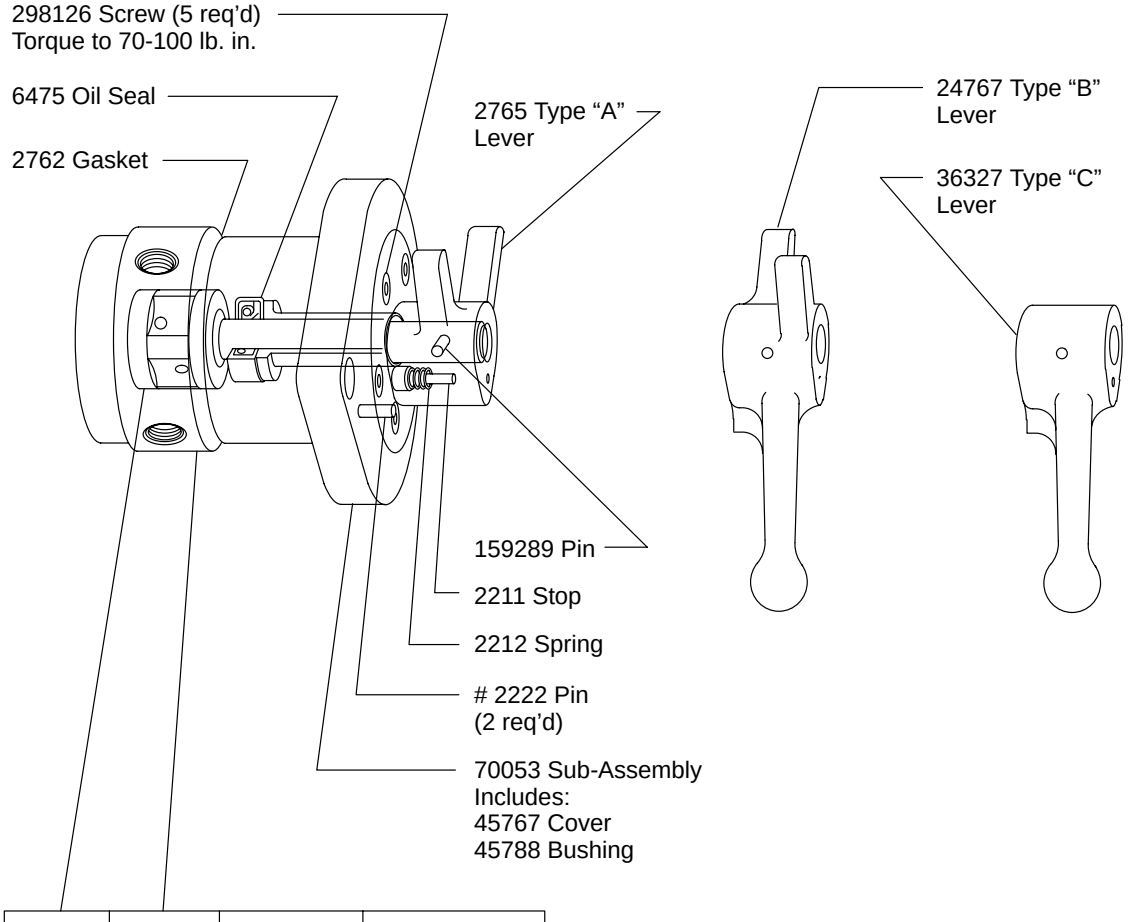

Spool	Body	Model	Type
45771	3268	C2-529-*	Internal Drain
45780	7266	C2-1529-*	External Drain

Note

Refer to installation drawing 514200 for correct locations of Type "A", "B", and "C" Levers.

WARNING

Use this drawing for parts information only.

Used on models with Type "B" or type "C" lever only.

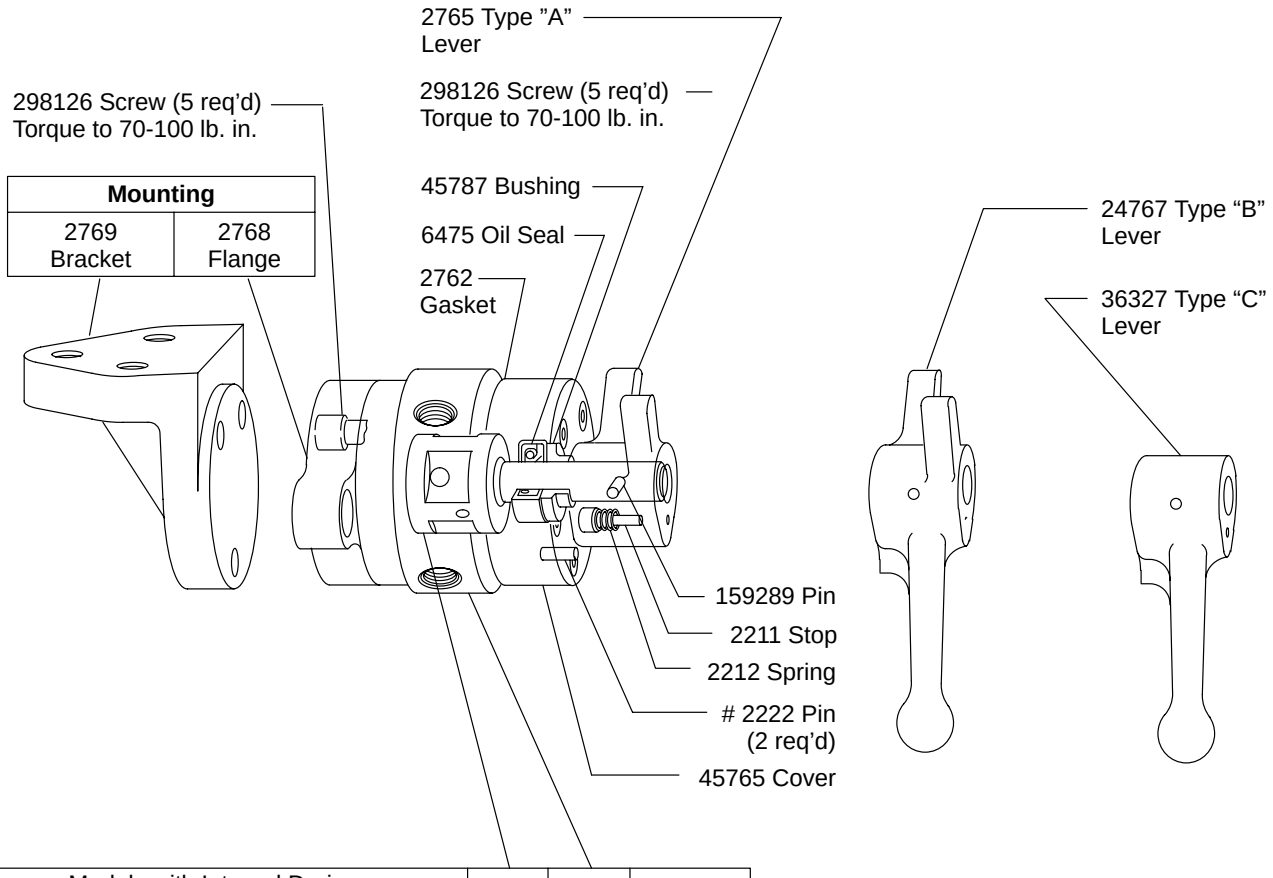

Models with Internal Drain				Spool	Body	Type of Mounting
No Lever	Type “A” Lever	Type “B” Lever	Type “C” Lever			
C2-523	C2-523-A	C2-523-B	C2-523-C	45770	3268	———
C2-524	C2-524-A	C2-524-B	C2-524-C			Flange
C2-525	C2-525-A	C2-525-B	C2-525-C			Bracket
Models with External Drain						
C2-1523	C2-1523-A	C2-1523-B	C2-1523-C	45779	7266	———
C2-1524	C2-1524-A	C2-1524-B	C2-1524-C			Flange
C2-1525	C2-1525-A	C2-1525-B	C2-1525-C			Bracket

Note

Refer to installation drawing 514200 for correct locations of Type “A”, “B”, and “C” Levers.

used on models with Type “B” or type “C” lever only.

For satisfactory service life of these components, use full flow filtration to provide fluid which meets ISO cleanliness code 20/18/15 or cleaner. Selections from Eaton OFP, OFR and OFRS filter series are recommended.

Printed in U.S.A.