Service Data

Vickers®

Directional Controls

Pilot Operated Directional Control Valves

DF3S4-16-*-53**

■ Plug torques (oiled)		
Plug	Torque (N.m.)	Torque (lb. in.)
7075	20.0-23.0	180-205
113000	5.0-5.9	45-52
315932	22.5-27.0	200-240
363889	16.9-18.0	150-160

Model	Bolt Kit
Without Pilot Choke	⊘466834
With Pilot Choke	□466836
Kits include (4) screws Torque to 12.4-12.65 N.m. (110-112 lb. in.)	

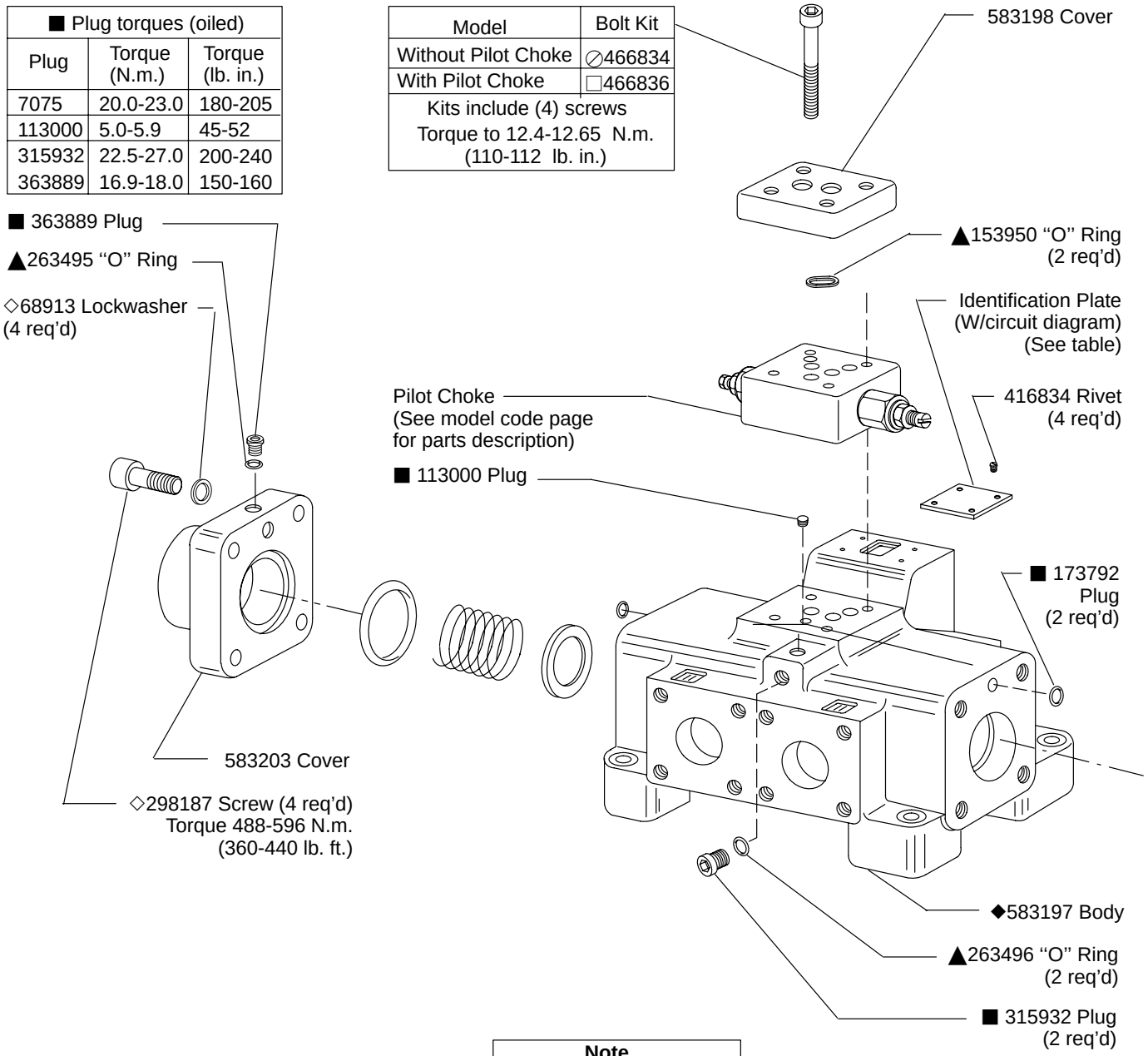

Note
SAE straight thread plugs used on exterior of valve.

See parts drawing I-3962-S for connection flanges.

Note
Part numbers included in kits will not be sold separately.

▲Included in F3 Seal Kit 919410
◇Included in Fastener Kit 941309
■ Plug torques (See table)
◆Not available for sale
⊘Included in Bolt Kit 255637
□Included in Bolt Kit 255637

Stroke Adjustment Parts

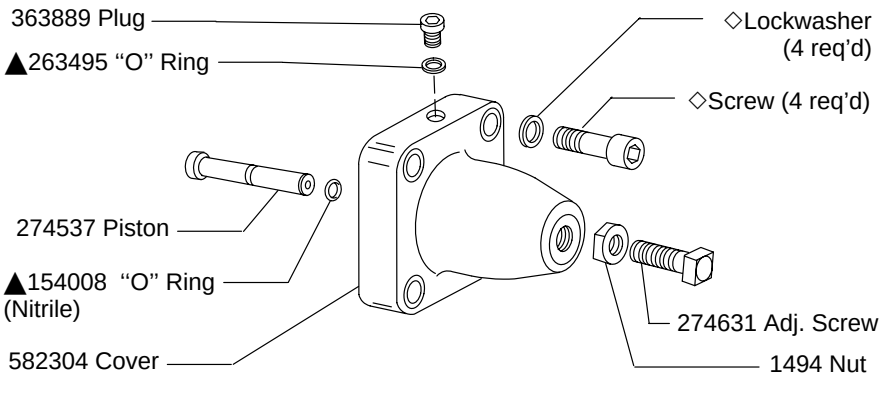

© Eaton Hydraulics, Incorporated 2000
All Rights Reserved

Model	Spool	I.D. Plate	
		"C"	No-Spring
DF3S4-160(C)-*-53	273677	400976	400975
DF3S4-161C-*-53	*386581	400977	—
DF3S4-162(C)-*-53	273676	400978	400975
DF3S4-163C-*-53	*275803	400979	—
DF3S4-164C-*-53	*273720	400980	
DF3S4-166(C)-*-53	275804	400981	400975
DF3S4-168C-*-53	*275805	400980	—
DF3S4-169(C)-*-53	275806	400976	400975
DF3S4-1631C-*-53	275803	580475	—
DF3S4-1633C-*-53	317777	400981	

*See spool assembly note below.

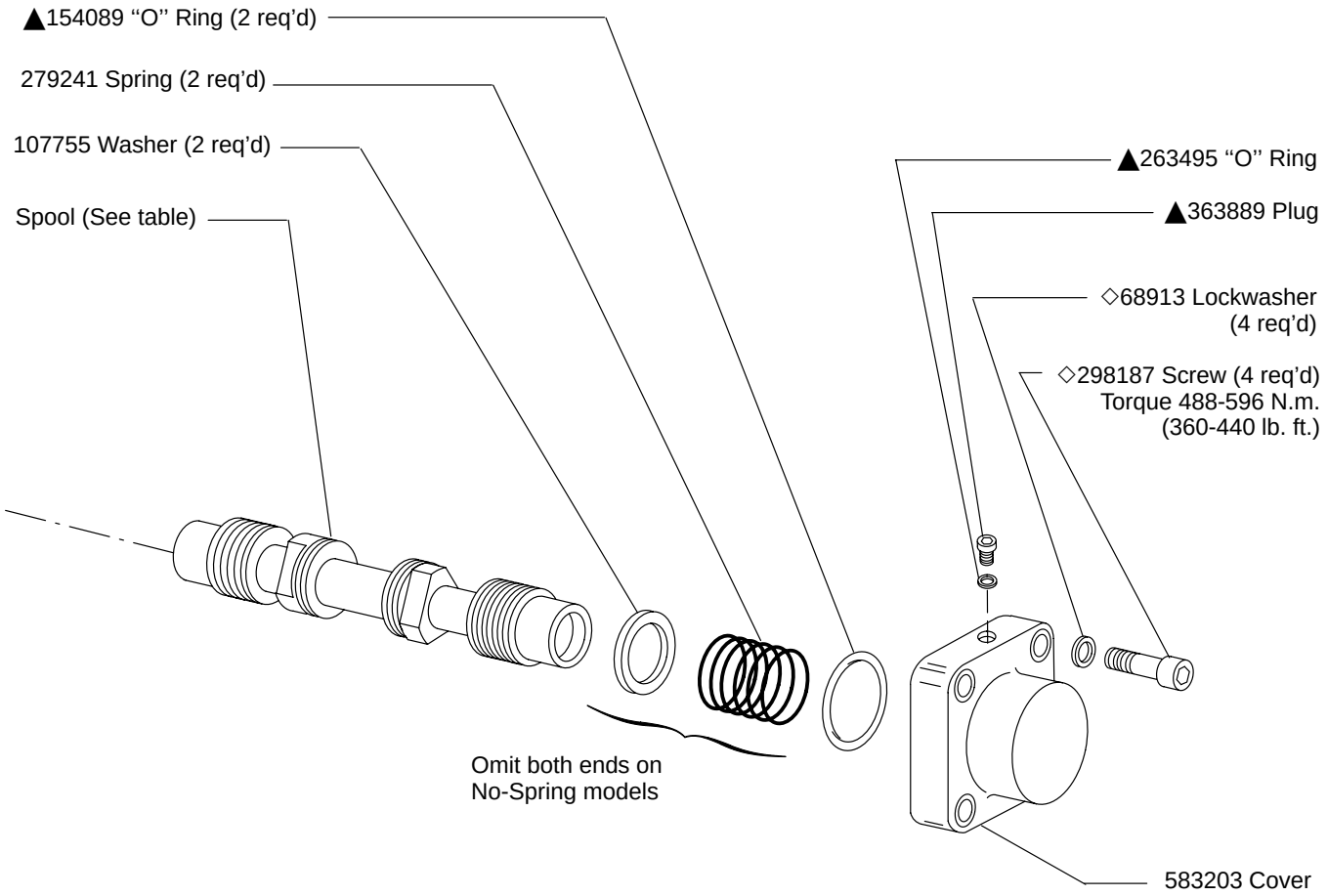

Spool Assembly Note

Assemble Type 1 & 3 spools with taper toward "B" end.

Assemble Type 4 & 8 spools with wide undercut toward "A" end.

Assemble Type 31 spool with taper toward "A" end of valve. "A" end is defined as being closest to cylinder port "A".

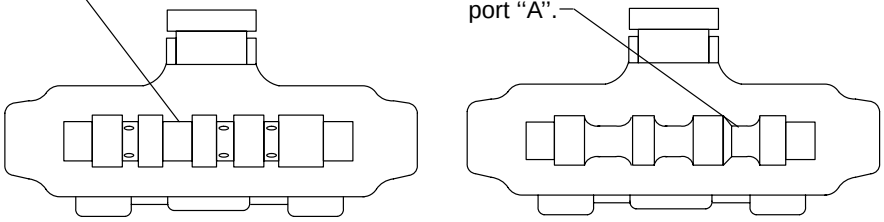

Pilot Choke

DGMFN-5-Y-AW-BW-20

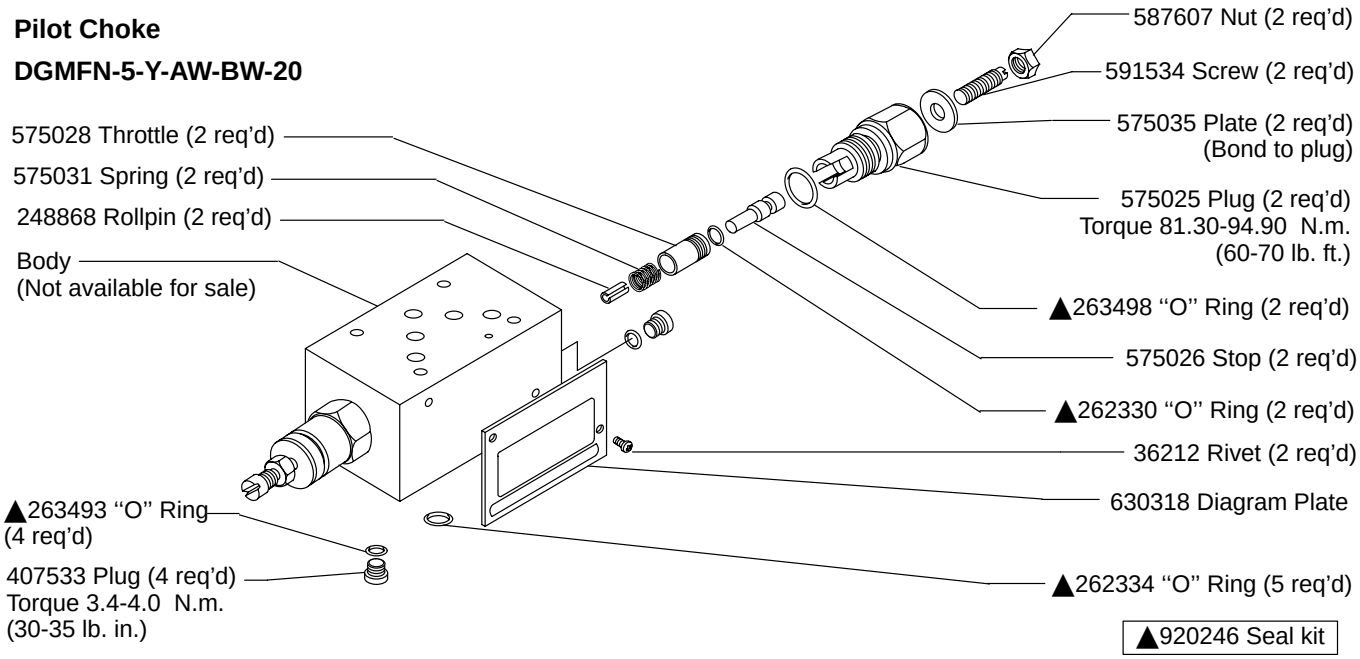

Model Code

(F3) DF3S4 - 16 * * - * - 53

1 2 3 4 5 6 7

1 Seal Material

F3 - Multi-fluid capability Viton® seals

Viton is a registered trademark of E.I. DuPont

2 Model Series

DF3S4 -Directional control valve, flange connections, pilot operated, sliding spool, 4-way flow

3 Valve Size

16 - 160 series (2.00 inch)

4 Spool Types

5 Valve Types

C - Spring centered
Omit - No-spring

6 Spool Control Modification

(Omit when not required.)

1 - Stroke adjustment
2 - Pilot choke adjustments
3 - Pilot choke & stroke adjustments
7 - Stroke adjustment, cylinder "A" end only
8 - Stroke adjustment, cyliner "B" end only

7 Design

For satisfactory service life of these components, use full flow filtration to provide fluid which meets ISO cleanliness code 18/15 or cleaner. Selections from Eaton OFP,OFR and OFRS filter series are recommended.

Printed in U.S.A.