Vickers®

Flow Controls

DG**-06 Series Stacking Valves

ISO-4401-08 (D06) Interface

Flows to 340 l/min (90 USgpm)
Pressure to 210 bar (3000 psi)

5125.00/EN/0598/A

Introduction

These stackable modules are designed for use with directional valves having an NFPA-D08 interface (ISO-4401-08) such as Vickers DG5S-8 directional valves.

All circuit flow paths are contained within the control valve and modules, thereby creating a pipeless, simplified, space-saving system.

Single station subplates are available for mounting the modules. Modules available are: relief valve, sequence, reducing, flow control and pilot operated check valves. External plugs are SAE straight thread.

The Vickers stack valves possess the characteristics expected of the best industrial products in today's marketplace. For over 70 years, the Vickers name has been synonymous with long trouble-free service.

Ratings

Maximum operating pressure:
210 bar (3000 psi)
Flows:

DGC*-06	227 l/min (60 USgpm)
DGC*-H06	340 l/min (90 USgpm)
DGX-06	113 l/min (30 USgpm)
DGX-H06	265 l/min (70 USgpm)
DGR-06, DGFN-06, DGPC-06	227 l/min (60 USgpm)

Modular Valve Circuitry Guide

To achieve optimum system performance with modular valves, it is essential that the basic principles of hydraulic circuitry be followed, particularly with respect to the location of individual modules relative to others in the circuit. In considering these relationships we can put the modules into two groups A and B (below).

Group A

Valves acting in the pressure and/or tank lines:

DGC-06 . . . . . System relief valve module
DGR-06 . . . . . Sequence valve module
DGX-06 . . . . . Pressure reducing valve module

The general rule in this group is that the DGR-06 or DGX-06 valve module be placed nearest the directional control valve. The furthest valve would be the DGC-06 system relief valve module (right).

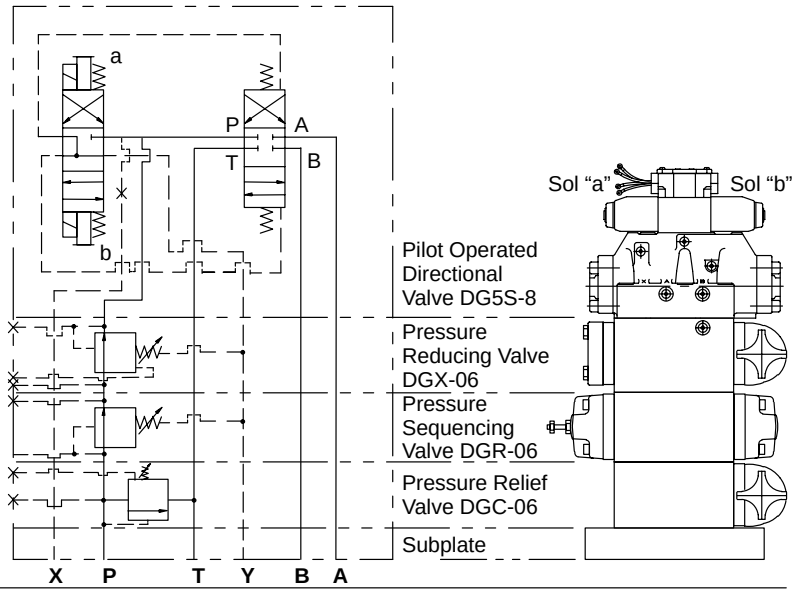

Group B

Valves acting in the service lines:

DGFN-06 . . . . . Flow regulator valve module (meter-out)
DGPC-06 . . . . . Dual pilot operated check valve module

The general rule for group B is when using a DGPC-06 with a DGFN-06 (meter-out), the DGPC-06 should be nearest the directional valve (right).

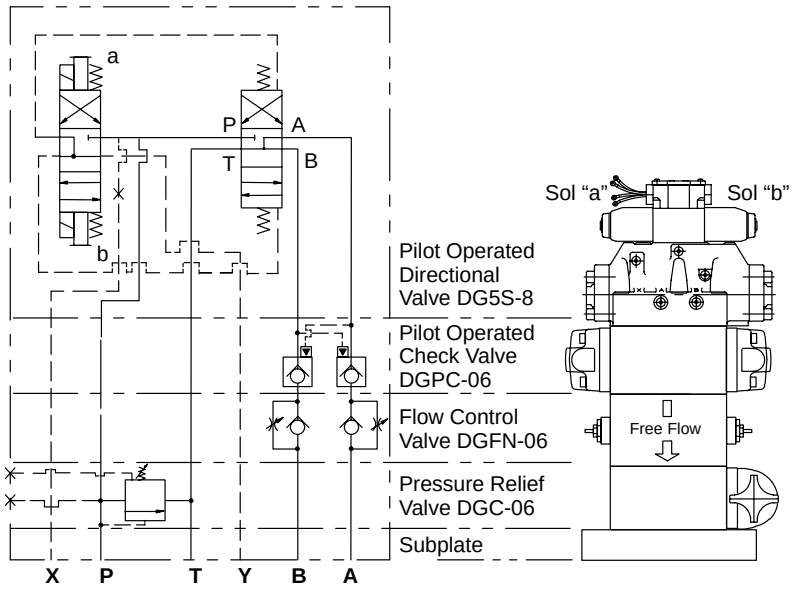

Contents

DGC-*06 Pressure Relief Module 4

Model Code 4
General Data 4
Application 4
Ratings 4
Installation Dimensions 5

DGC5-*06 Solenoid Controlled Relief Modules 6

Model Code 6
General Data 6
Application 6
Ratings 6
Electrical Service 7
Installation Dimensions 7
Performance Curves 8

DGR-06 Pressure Sequence Module 9

Model Code 9
General Data 9
Application 9
Ratings 9
Installation Dimensions 10

DGX-*06 Pressure Sequence Module 11

Model Code 11
General Data 11
Application 11
Ratings 11
Performance Curves 12
Installation Dimensions 13

DGFN-06 Flow Regulator Module 14

Model Code, General Data, Application, Ratings, Installation Dimensions 14

DGPC-06 Pilot Operated Check Module 15

Model Code 15
General Data 15
Application 15
Ratings 15
Installation Dimensions 16

DGSM-8 Single Station Subplates & Mountings 17

General Data 17
Ordering Procedure 18
Installation Dimensions 18

Application Data 19

Pressure Relief Valve Module

Model Code

DGC - H - 06 - * - V - 60

1 2 3 4 5 6

1 Relief Module

2 Flow

Omit if not required
H - High flow type

3 Module Size

06 - $^{3}/_{4}$ inch

4 Pressure Range

B - 8,6 to 70 bar (125 to 1000 psi)
C - 35 to 140 bar (500 to 2000 psi)
F - 100 to 210 bar (1500 to 3000 psi)

5 High Vent Spring

Omit if not required
V - Required on high flow “H” models

6 Design Number

Subject to change. Installation dimensions remain as shown for designs 60 through 69.

General Data

These relief modules limit system pressure by directing pump flow to tank when system pressure reaches the setting of the module and thus preventing overloading of the system.

In addition to conventional overload relief module operation, two other features are provided:

System pressure may be limited to relatively low venting pressure by directing flow from the vent connection to tank.

System pressure may be remotely controlled by directing flow form the vent connection to a remote control pressure relief valve (C-175-*-2*).

Application

Pressure Setting

The pressure setting of the relief module selected should be approximately 10 to 14 bar (150 to 200 psi) above the actual system working pressure. A higher setting will waste power and impose unnecessary strains on the pump and other system components.

Pressure Adjustment

Pressure is adjusted by loosening the jam nut and turning the adjusting screw. Clockwise rotation increases pressure, counterclockwise rotation decreases pressure.

Ratings

Flow:
DGC-06 . . . . . 227 l/min (60 USgpm)
DGC-H06 . . . . . 340 l/min (90 USgpm)

Tank & Drain Port

Both must be piped directly to tank through a surge-free line.

Tank line applications where back pressure is required to provide pilot pressure for the open center DG valve spool, may have back pressure, but not to exceed 5 bar (75 psi). Any back pressure on the tank line must be added to the relief valve setting.

Drain line (Y port) must be piped so there will be no back pressure at this port. Transient pressure must not exceed 0,35 bar (5 psi).

Pressure Drop

Through the module at 170 l/min (45 USgpm) and 21 cSt (100 SUS) is 1,2 bar (18 psi).

Weight

DGC-06 . . . . . 9,1 kg (20 lbs.)

Pressure Relief Valve Graphical Symbol

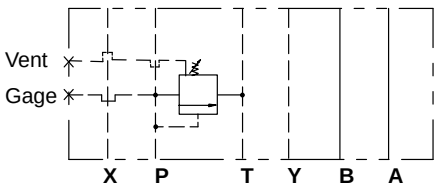

DGC-*06 Pressure Relief Installation

Dimensions shown in millimeters (inches)

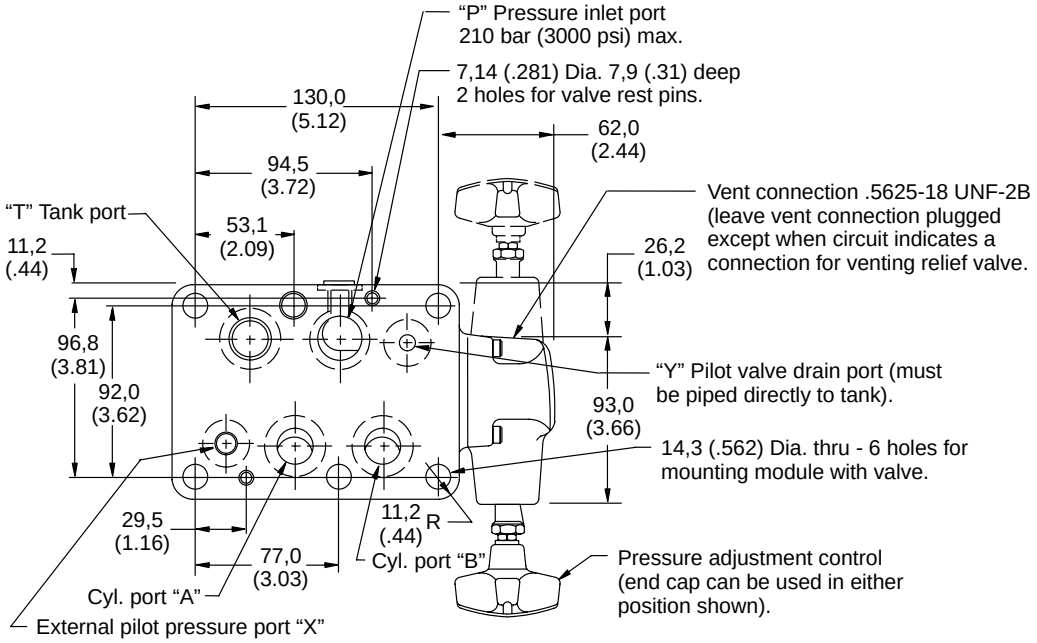

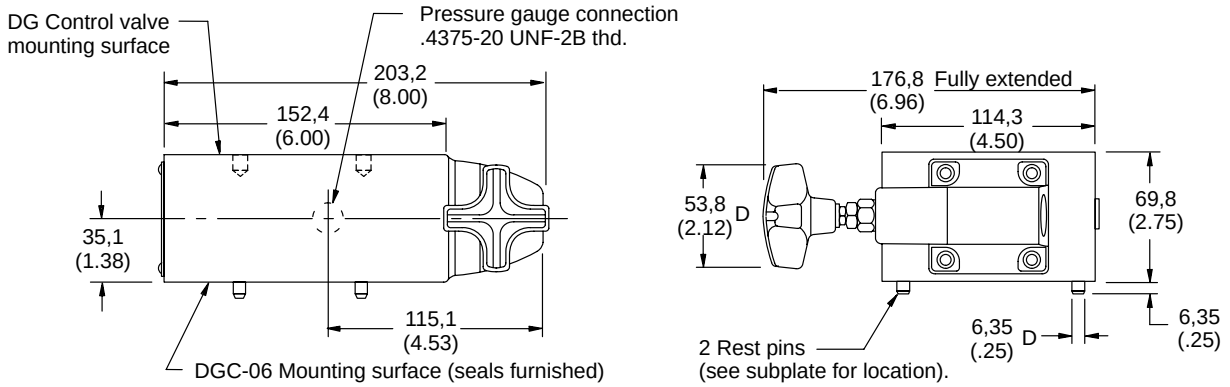

Solenoid Controlled Relief Modules

Model Code

DGC5 - H 06 0 A - * V - M - W* - * - 7*

1 2 3 4 5 6 7 8 9 10 11

1 Relief Module

Solenoid controlled

2 Flow

Omit if not required
H - High flow type

3 Module Size

06 - $^{3}/_{4}$ inch

4 Pilot Spool Function

0 - See graphical symbol.

5 Pilot Spool Spring Arrangement

A - Spring offset.

6 Pressure Range

B - 8,6 to 70 bar (125 to 1000 psi)
C - 35 to 140 bar (500 to 2000 psi)
F - 100 to 210 bar (1500 to 3000 psi)

7 High Vent Pressure

Omit if not required
V - Required on high flow “H” models

8 Flag Symbol

Electrical features and options.

9 Electrical Options

W - $^{1}/_{2}$ NPT thread, wiring housing port.
WL - $^{1}/_{2}$ NPT thread, wiring housing port with solenoid indicator light (B & D solenoids only).

10 Coil Identification Letter

B - 115/120/60, 110/50. Indicate other voltages and frequencies by suitable letter. (see chart under Electrical Service)

11 Design Number

Subject to change. Installation dimensions remain as shown for designs 70 through 79.

General Data

These valves are generally used for applications requiring an electrically controlled adjustable pressure relief or regulating valve to limit the pressure in an oil circuit to the desired maximum.

The valves provide a wiring cavity located in the DG4V pilot directional valve. A ground terminal is provided as shown.

Solenoid Indicator Light

An indicator light is available with most voltages. The light is “on” when there is current at the solenoid. On spring offset models, light is on solenoid “a” end only.

The conduit connection readily adapts to connector-receptacle assemblies on the market.

Solenoid Energizing

Solenoids must be held energized for a desired action. Spring offset models have an internal spring which offsets the valve spool when solenoid is de-energized.

Notes
Any sliding spool valve, if held shifted under pressure for long periods of time, may stick and not spring return due to fluid residue formation, and , therefore, should be cycled periodically to prevent this from happening.

Surges of oil in a common tank line serving these and other valves can be of sufficient magnitude to cause inadvertent shifting of the pilot spool of the valves. Separate tank lines or a vented manifold with a continuous downward path to tank are necessary.

Application

Tank Conditions

The tank connection should be piped directly to tank to minimize back pressure. Any back pressure in the tank line is additive to the valve pressure setting. If tank line back pressure exceeds system pressure by 7 bar (100 psi) a malfunction may occur. Transient pressure peaks in the tank line must not exceed 175 bar (2500 psi).

Drain

“Y” port must be piped directly to tank through a surge free line such that there will be no back pressure at the valve drain port. Transient pressure must not exceed 0,35 bar (5 psi).

Ratings

Flow:
DGC5 . . . . . 227 l/min (60 USgpm)
DGC5-H06 . . . . 340 l/min (90 USgpm)

Weight

DGC5 . . . . . 11,2 kg (25 lbs.)

Solenoid Controlled Relief Valve Graphical Symbol

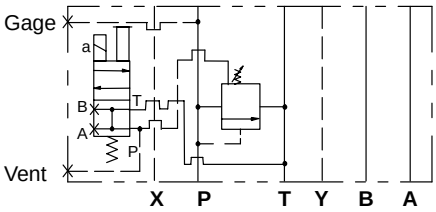

Electrical Service

Solenoids are identified by a letter in the model number.
Example: DGC5-060A-C-M-W-**B**-70
(See chart below for solenoid voltage ratings and coil identification letters.)

Solenoid Voltage Rating	Identification Letter	Inrush Amps (R.M.S.)*	Holding Amps	Holding Watts
115/120 VAC 60 Hz 110 VAC 50 Hz	B	2.0	.54 .64	31
230 VAC 60 Hz 220/230 VAC 50 Hz	D	1.0	.27 .32	31
6 VDC	F	–	6.8	41
12 VDC	G	–	3.5	41
24 VDC	H	–	1.7	41

* Maximum peak inrush amps approximately 1.4 x R.M.S. value shown.
Note: Solenoids are designed to function continuously at ±10% of rated voltage.

DGC5-06 Installation

Dimensions shown in millimeters (inches)

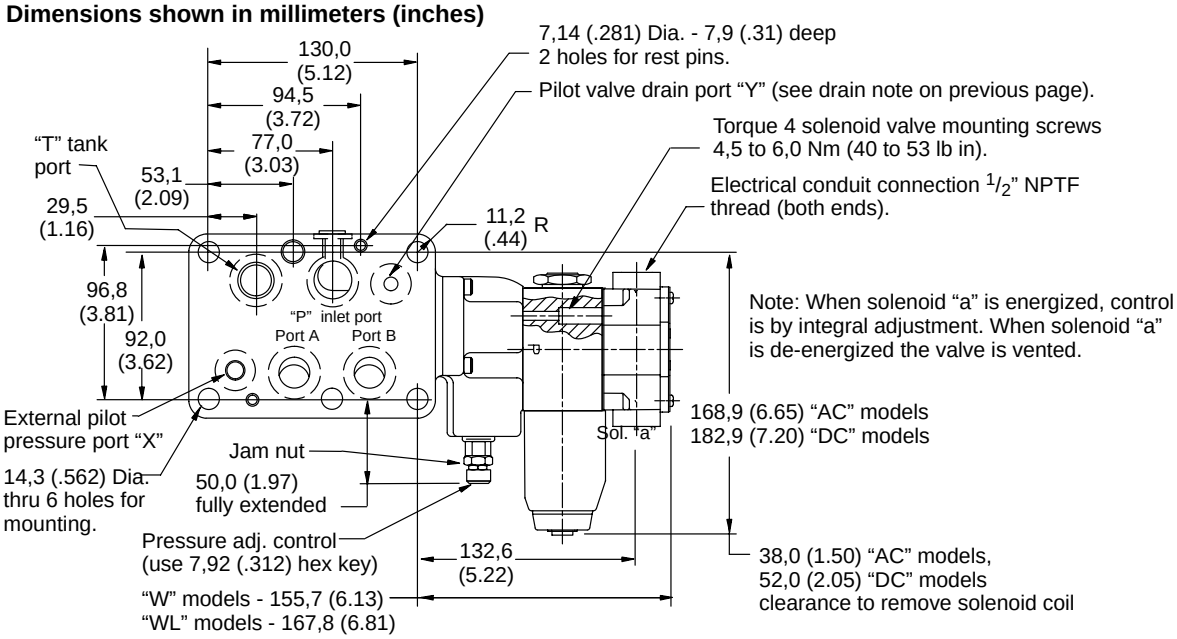

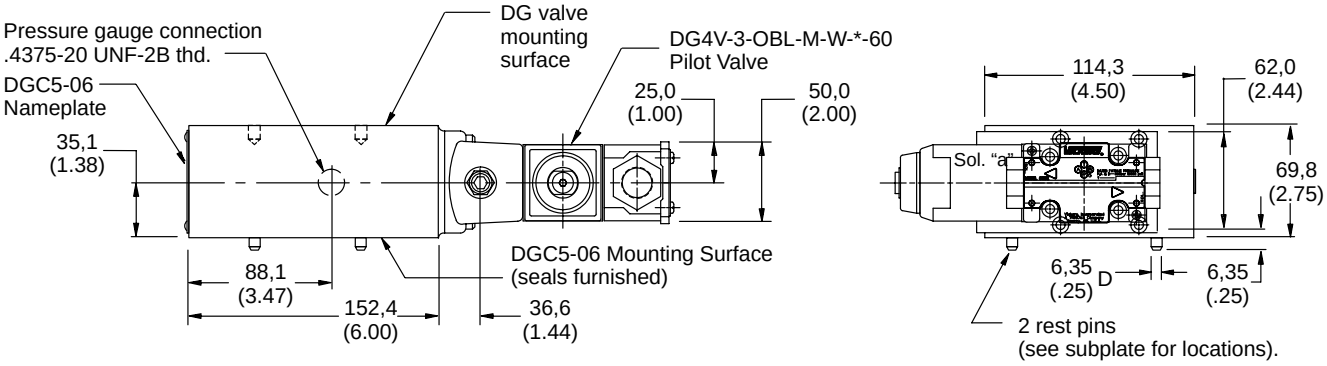

Performance Curves

Nominal Override Characteristics

DGC*-06 Models

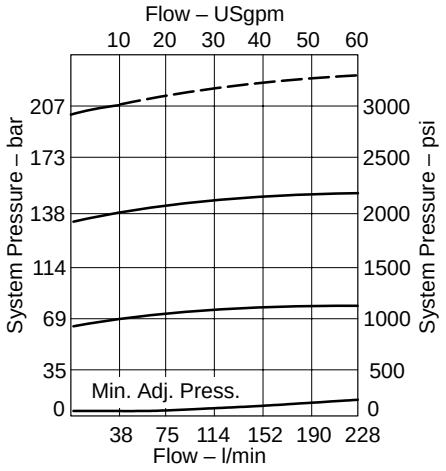

DGC*-H06 Models

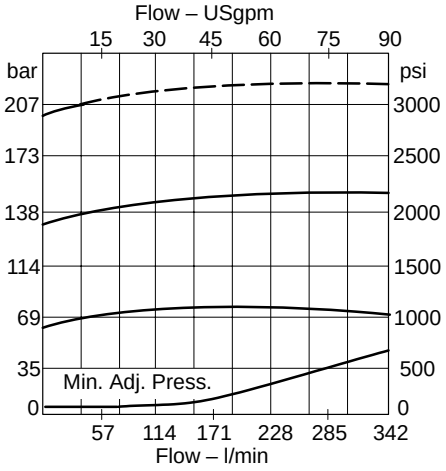

Vent Pressure Vs. Flow

DGC*-06 Models

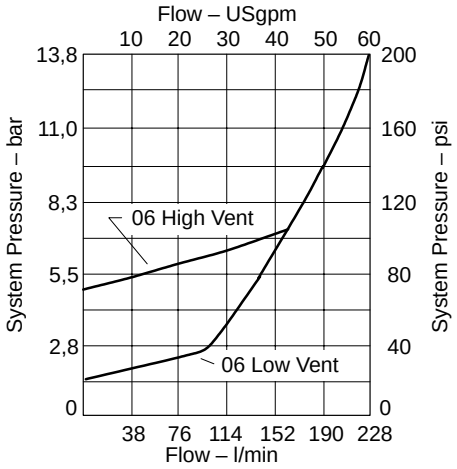

DGC*-H06 Models

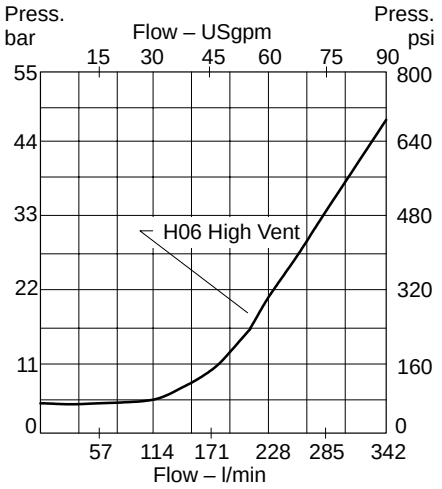

Pressure Sequence Module

Model Code

DGR - 06 - * 2 - 5*

1 2 3 4 5

1 Sequence Module

2 Module Size

06 - $^{3}/_{4}$ inch

3 Maximum Adjustable Pressure

X - 2 bar (30 psi)
Y - 4 bar (60 psi)
Z - 8,6 bar (125 psi)
A - 17 bar (250 psi)
B - 35 bar (500 psi)
D - 70 bar (1000 psi)
F - 140 bar (2000 psi)

4 Module Type

2 - Directly operated, drained to “Y” port.

5 Design Number

Subject to change. Installation dimensions remain as shown for designs 50 through 59.

General Data

Vickers sequence modular “hydrocushion” type pressure control valves are used to control sequencing of oil flow in hydraulic systems. Control is initiated by a pressure rise which is sensed internally (directly).

The valves provide a wiring cavity located in the DG4V pilot valve. A ground terminal is provided as shown.

Application

Pressure Setting

Must be at least 17 bar (250 psi) lower than the system relief valve setting.

Pressure Adjustment

Adjust pressure by loosening jam nut and turning adjusting screw. Clockwise rotation increases pressure; counterclockwise rotation decreases pressure.

Maximum Adjustable Pressures

See model code above. Pressures are maximum controllable and each model selected should be well within the range given to afford fine increments of adjustment.

Ratings

Flow: 227 l/min (60 USgpm)
Pressure: 210 bar (3000 psi)

Drain

Drain must be piped directly to tank through a surge free line to ensure that there is no back pressure at the valve drain port “Y”. Transient pressure must be avoided. Any pressure at the drain port adds to the pressure setting of the valve.

Weight

DGR-06 . . . . . 12,7 kg (28 lbs.)

Pressure Sequence Graphical Symbol

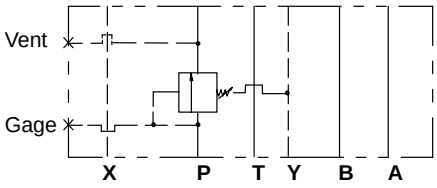

DGR-06 Pressure Sequence Module Installation

Dimensions shown in millimeters (inches)

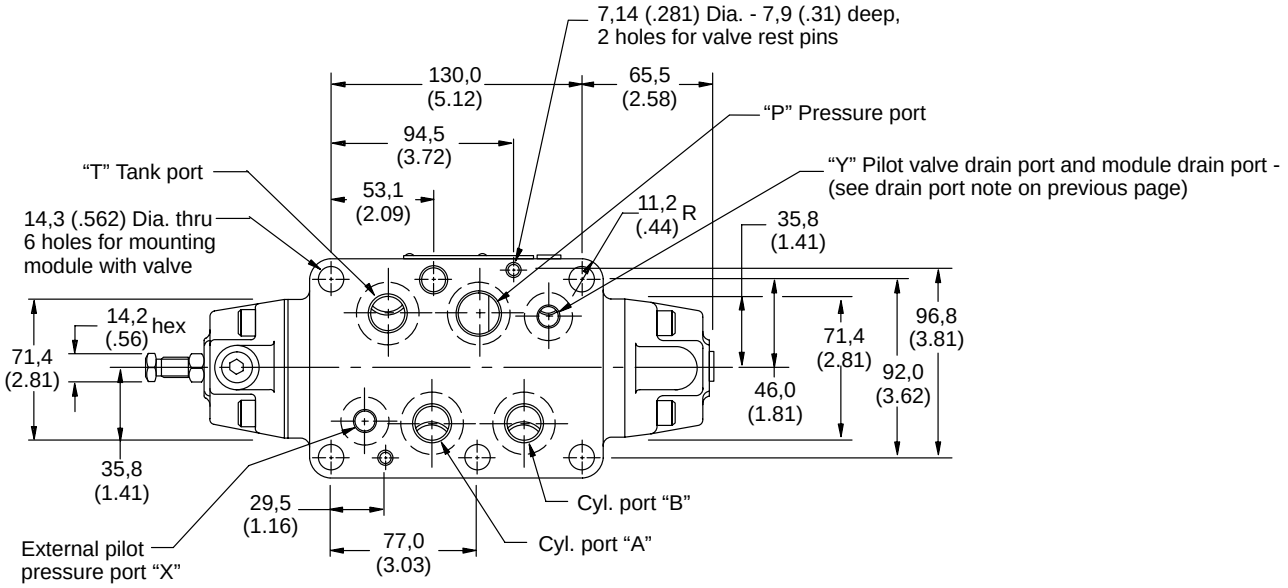

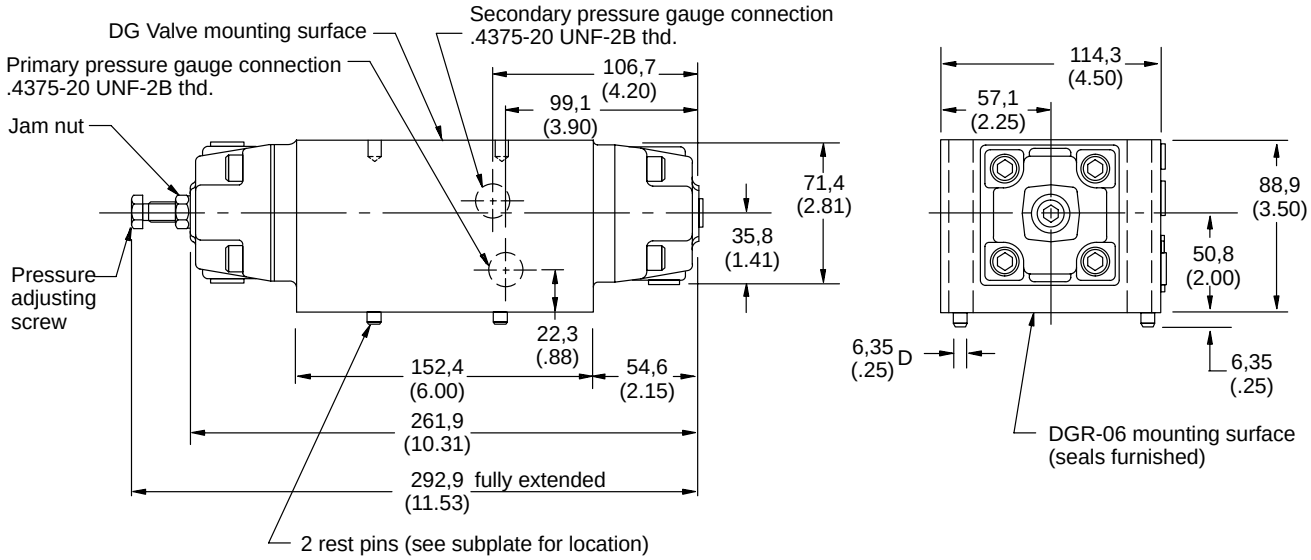

Pressure Reducing Module

Model Code

DGX - H 06 - * * * - 6* - S19

1 2 3 4 5 6 7 8

1 Pressure Reducing Valve

X - Direct operated

2 High Flow Capacity

Blank - Omit for “B” and “F” models.
H - 265 l/min (70 USgpm).

3 Module Size

06 - $^{3}/_{4}$ inch

4 Maximum Adjustable Pressure

1 - 70 bar (1000 psi)
2 - 140 bar (2000 psi)
3 - 200 bar (2900 psi)

5 Maximum Flow Capacity

Blank - Omit for high flow “H” models.
B - 57 l/min (15 USgpm), 5,5 bar (80 psi) minimum adjustable pressure (”3B” configurations not available).
F - 114 l/min (30 USgpm), 14 bar (200 psi) minimum adjustable pressure.

6 Drain Options

Blank - Omit for standard (“Y” port drain)
E - Externally drained through cover.
L - Internally drained to “B” port.

7 Design Number

Subject to change. Installation dimensions remain as shown for designs 60 through 69.

8 Special Feature Suffix

S19 - Internally drained to tank.

General Data

The operation of these pressure reducing modules is such that reduced outlet pressure is maintained constant, regardless of variation of inlet pressure above the selected pressure setting.

Application (see installation drawing on page 13)

[1.] Pressure Setting

Adjustment of reduced outlet pressure is accomplished by loosening jam nut and turning pressure adjustment control. Clockwise rotation increases pressure; counterclockwise rotation decreases pressure. Control adjustment has stops for minimum and maximum pressure.

Adjustable Pressure Maximum:
“1” 70 bar (1000 psi)
“2” 140 bar (2000 psi)
“3” 175 bar (2500 psi)

[2.] Remote Pressure Adjustment

Reduced pressure may be adjusted remotely by connecting remote control connection to the pressure inlet port of a CGR-02-*-3* valve or C-175-*-2* valve. Pressure setting of the main valve must be higher than that of the remote control.

[3.] Drain

“Y” port must be piped directly to tank through a surge free line so there’s no back pressure at the valve drain port. Transient pressure must not exceed 0,35 bar (5 psi).

Port “B” (Type L) and cover drain (Type E) may be subjected to pressure up to 210 bar (3000 psi); this pressure is additive to the reduced pressure setting.

[4.] Contact your local distributor or Vickers representative if maximum inlet pressure is needed with minimum rated reduced pressure.

Pressure Drop

Through the module at 114 l/min (30 USgpm) and 21 cSt (100 SUS) is 1,5 bar (22 psi).

Ratings

Maximum flow capacity (see note [4]):
DGX-06-*-B* (5,5 bar (80 psi) min. adj. press. . . . . 57 l/min (15 USgpm)

DGX-06-*F*-6* (14 bar (200 psi) min. adj. press. . . . . 114 l/min (30 USgpm)

DGX-H06-**-6* 265 l/min (70 USgpm)

Max. inlet pressure: 210 bar (3000 psi)

Drain Leakage

Typical DGX-*-06 drain leakage values at no thru flow condition are shown below for various differential pressures (subtract outlet pressure from inlet pressure).

Diff. Press. (ΔP)	Drain Leakage
35 bar (500 psi)	74 to 1,07 l/min (45-65 in^3/min)
100 bar (1500 psi)	90 to 1,31 l/min (55-80 in^3/min)
170 bar (2500 psi)	1,15 to 1,64 l/min (70-100 in^3/min)

Weight

DGX-06 . . . . . 11,8 kg (26 lbs.)

Pressure Reducing Graphical Symbol

Model No.	Description	
DGX-06-*-6*	Operated from “P” and reducing in “P”. Drained to “Y” port.	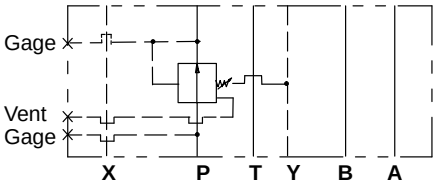
DGX-06-*L-6*	Operated from “P” and reducing in “P”. Drained to “B” port reduced pressure on “A” port only.	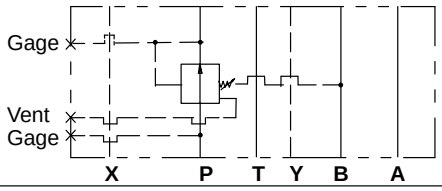
DGX-06-*E-6*	Operated from “P” and reducing in “P”. Drained externally thru cover connection.	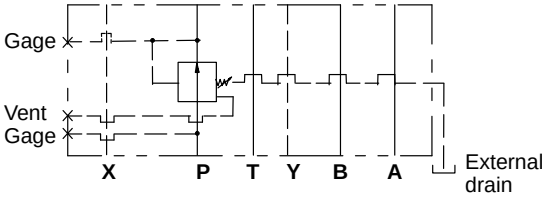

Outlet Pressure vs. Flow Characteristics

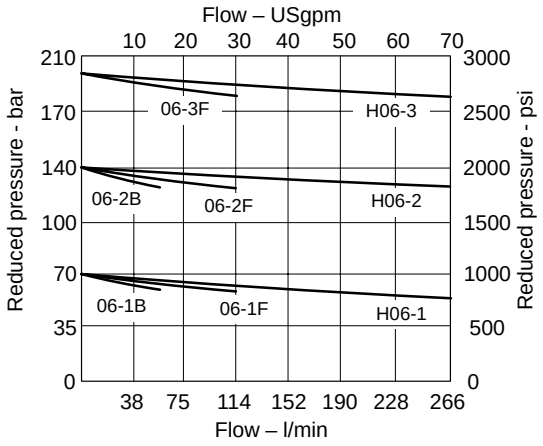

Minimum Adjustable Pressure vs. Flow

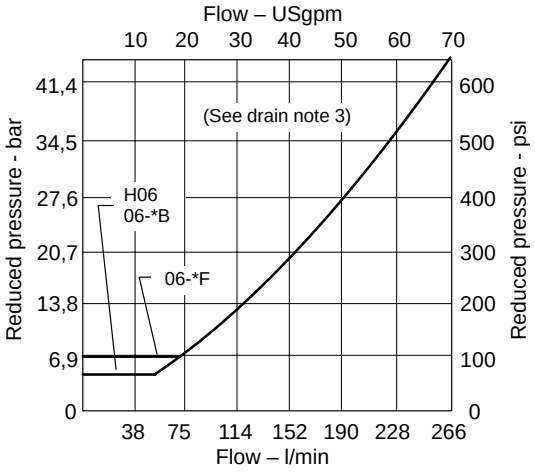

Note: These charts are based on the inlet pressure being at least 10,3 bar (150 psi) higher than the outlet reduced pressure.

DGX-*06 Pressure Reducing Module Installation

Dimensions shown in millimeters (inches)

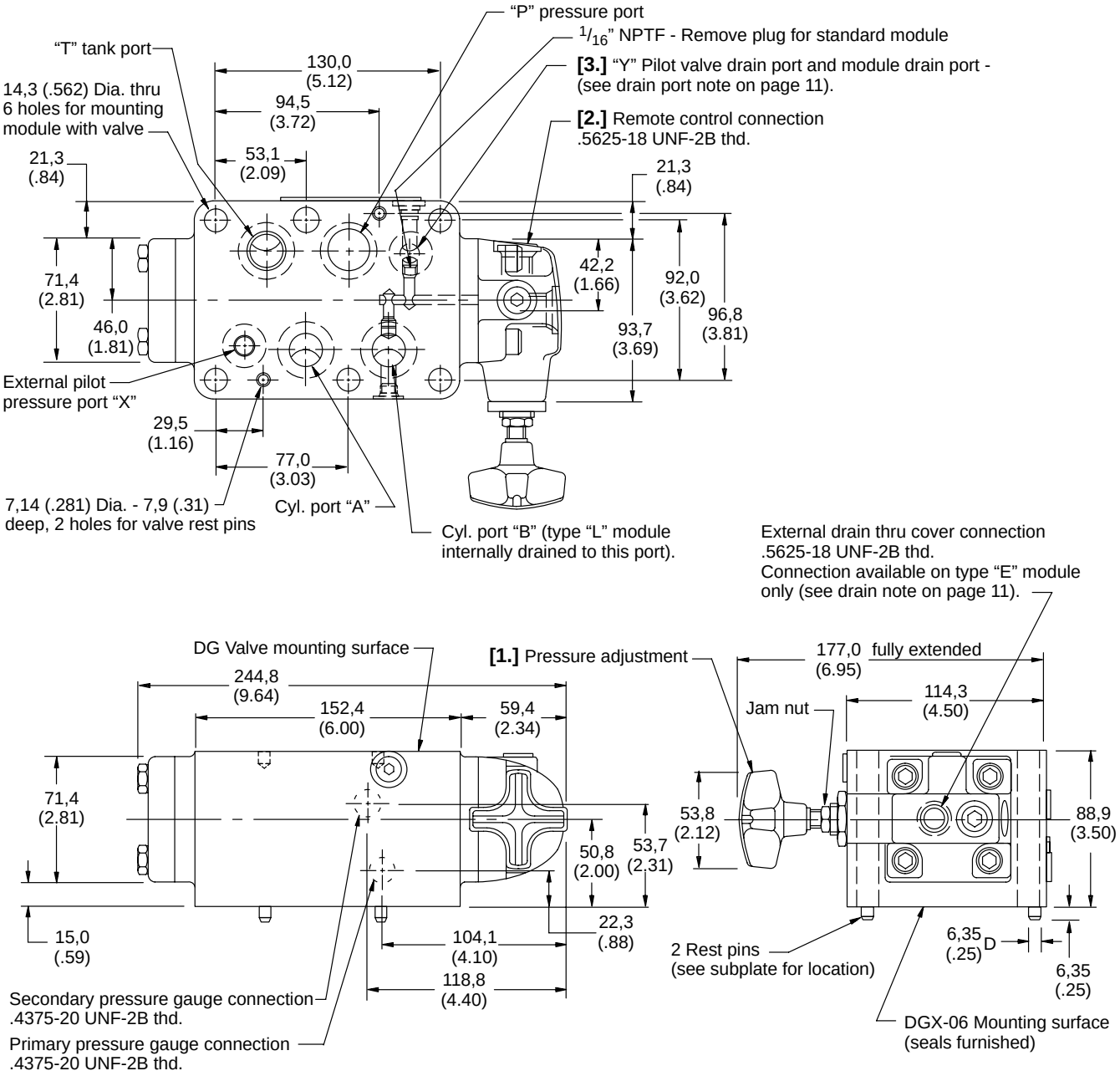

Flow Regulator Module

Model Code

DGFN - 06 - 5*

1 2 3

1 **Flow Control Module**

2 **Module Size**

06 - $^{3}/_{4}$ inch

5 **Design Number**

Subject to change. Installation dimensions remain as shown for designs 50 through 59.

General Data

These flow regulator modules have restriction checks in both cylinder ports. Flow to the directional valve passes through the module; flow out of the cylinder port of the directional valve passes free flow over restriction checks; return flow must pass over one of the restriction checks. As a result, the actuator device is controlled in a meter-out mode in each direction.

Application

Drain

Pilot valve drain line “Y” must be piped directly to tank through a surge free line so that there will be no back pressure at this drain. Transient pressure must not exceed 0,35 bar (5 psi).

Pressure Drop

Through the module at 132 l/min (35 USgpm) and 21 cSt (100 SUS) is 11,4 bar (165 psi) with adjusting screws completely in (total drop P to A plus B to T).

Ratings

Max. inlet pressure: 210 bar (3000 psi)
Max. flow (rec.): 227 l/min (60 USgpm)

Weight

DGFN-06-5* . . . . . 6,4 kg (14 lbs.)

Flow Regulator Graphical Symbol

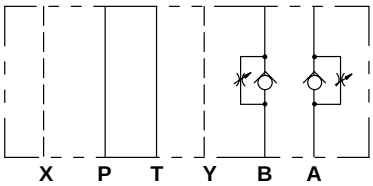

DGFN-06 Flow Regulator Module Installation

Dimensions shown in millimeters (inches)

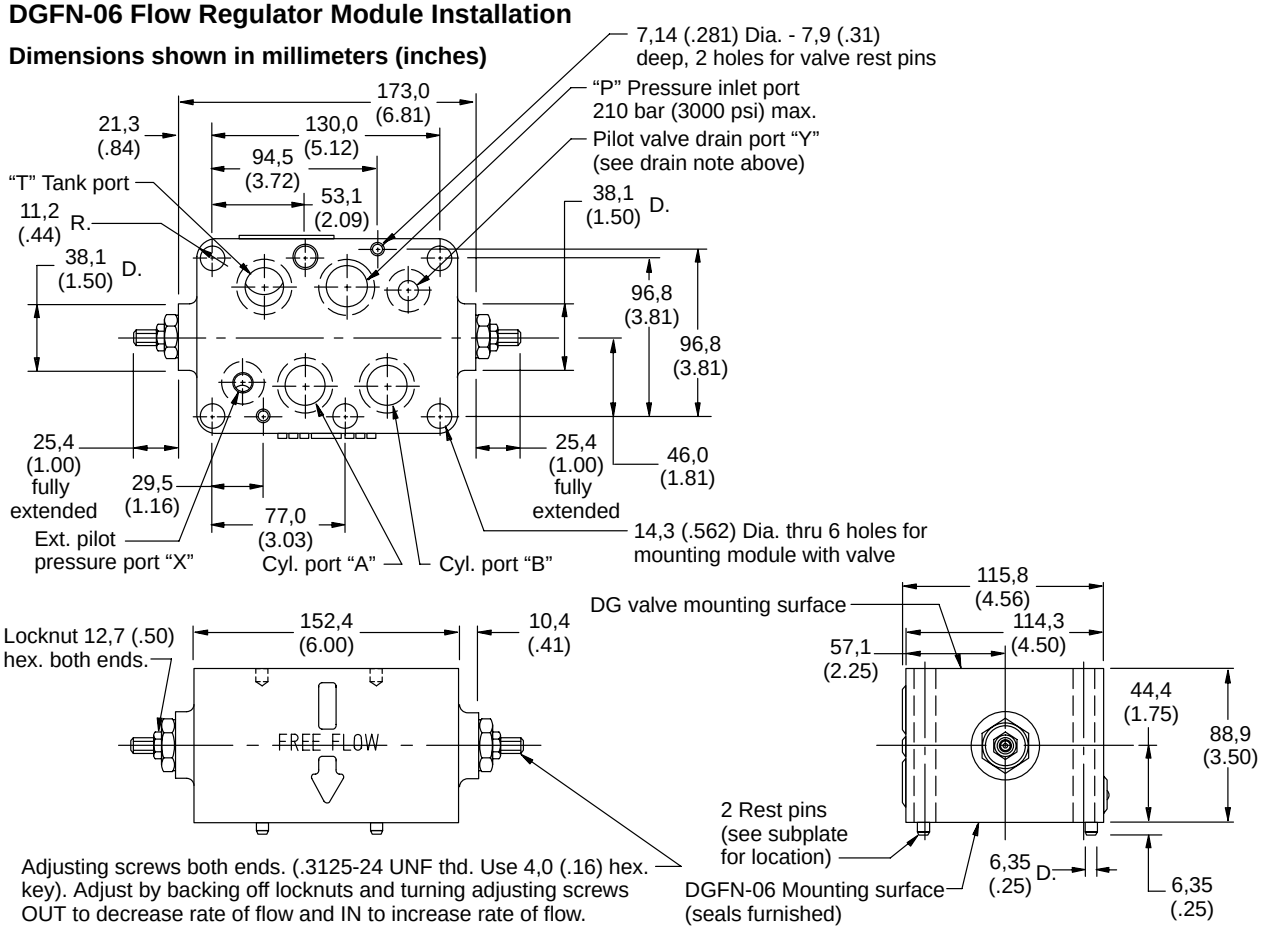

Pilot Operated Check Module

Model Code

DGPC - 06 - D A * D B * - 5*

1 2 3 4 5 6 7 8 9

1 Pilot Operated Check Module

X - Direct operated

2 Module Size

06 - $^{3}/_{4}$ inch

3 "D" Decompression Feature

Blank if not required.

4 Check in Cyl. "A" Port

5 Check Valve Cracking Pressure

Blank for standard 2 bar (30 psi) cracking pressure. Other cracking pressures are available upon request.

6 "D" Decompression Feature

Blank if not required.

7 Check in Cyl. "B" Port

8 Check Valve Cracking Pressure

Blank for standard 2 bar (30 psi) cracking pressure. Other cracking pressures are available upon request.

9 Design Number

Subject to change. Installation dimensions remain as shown for designs 50 through 59.

General Data

These modules are available with a check valve in either one or both cylinder ports. They are arranged for free flow out of the DG*S-8 directional valve.

For return flow, one check can be unseated by a common striker piston mounted co-axially between the two checks; this happens when internal pressure on one side is sufficient to cause the striker piston to open the check valve on the opposite side. In a neutral condition (with cylinder ports open to tank at the directional valve) compression springs will seat the checks and the machine actuator will be held stationary.

A small decompression poppet which opens before the main check valve is available. Add the letter "D" as shown in the model code.

Application

Directional Valve
Directional valve types with cylinder ports open to tank in center position are recommended. (Spool types 0, 6, 9 and 33). The DGPC module is not usable with pressure centered or DG18S-8 air operated valves.

Drain
Drain connection "Y" must be piped directly to tank through a surge free line so there will be no back pressure at the valve drain port. Transient pressure must not exceed 0,35 bar (5 psi).

Note
When using pilot operated check modules, it is desirable to include a flow control module (DGFN-06) to impose a greater back pressure on the cylinder than the load generates to avoid chattering.

Pressure Drop

Through the module at 132 l/min (35 USgpm) and 21 cSt (100 SUS) is 7 bar (100 psi) not including the check cracking pressure (total drop P to A plus B to T).

Ratings

Max. flow (rec.)	227 l/min (60 USgpm)
Max. inlet pres.	210 bar (3000 psi)
Opening ratios:	
Decompression poppet	34.1:1
Check	02.2:1
Cracking pressures:	
Each check (standard)	2 bar (30 psi)
(Other cracking pressures are available on request.)	

Weight

DGPC-06 . . . . . 13,2 kg (29 lbs.)

DGPC-06 Pilot Operated Check Installation

Dimensions shown in millimeters (inches)

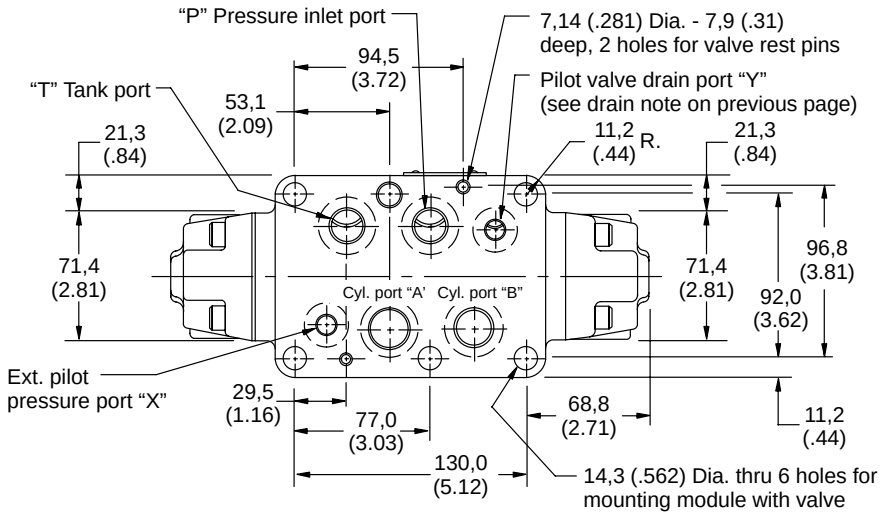

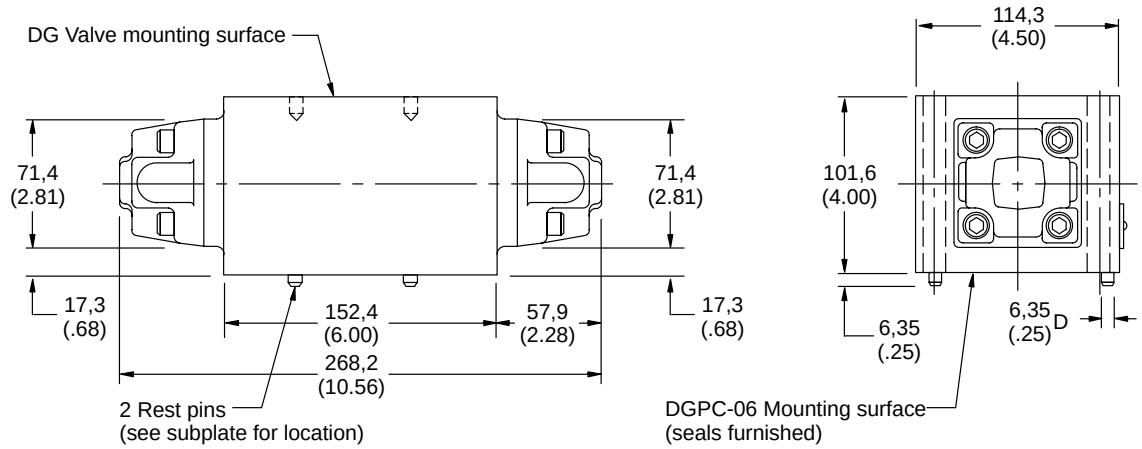

DGSM-8 Single Station Subplates & Mountings

General Data

Before beginning to assemble individual modular valves, mating surfaces must be undamaged and completely clean in order to ensure a perfect seal.

Single Station Subplates

DGSM single station subplates are designed for individual mounting of one modular valve system.

Mounting Pad

When a subplate is not used, a machined pad (as indicated by subplate shaded area) must be provided for mounting. Pad must be flat within 0,013 mm (.0005 inch) and smooth within 1,6 µm (63 microinch).

Mounting Bolts for Modular Valves

Mounting the various combinations of modular valves in vertical assemblies will require bolt kits of different lengths. These lengths can be determined from the Bolt Length/Kits Selection Chart (below) which indicates the height of the various modules. Mounting bolts provided by the customer should be SAE grade 7 or better.

Bolt Kits for Modular Mounting

A range of bolt kits is available for mounting the various modules, normally topped with a DG5S-8, DG3S-8 or DG17S-8 directional control valve. As the modules are of varying height, it is necessary to calculate the height of the stack and then add 20,66mm (.81 in.) for thread engagement. The Bolt Length/Kits Selection Chart (below) contains a list of all possible bolt lengths for the modular system to NFPA-D08 (ISO-4401-08) interface.

Bolt Length Selection Chart - Bolt Kits for Modular Valves

Note: This table serves as a guide in selecting the proper mounting bolt length for various combinations of modules. After the circuit is developed and the components to be stacked are predetermined, add the required lengths plus a 20,6 mm (.81 inch) thread engagement for the subplate or manifold. Select the proper inch thread bolt and order by the bolt kit number. All bolt kits include six (6) socket head screws and six (6) lockwashers 4,4 mm (.17 inch) thick.

Using two (2) center bolts is optional. All six (6) bolts are recommended for pressure ranges of 140 bar (2000 psi) to 210 bar (3000 psi) for maximum seal life.

DG5S-8	FN, R, X	C	PC	Subplate	Bolt Length	Bolt Kit Model No.
Length Required (inch)*						
1.86*	3.5	2.75	4.0	0.64*	$^1/_2$ - 13 UNC thd.	
1	–	1	–	1	5-$^1/_4$	BK255693
1	1	–	–	1	6	BK255691
1	–	–	1	1	6-$^1/_2$	BK255692
1	1	1	–	1	8-$^3/_4$	BK255668
1	–	1	1	1	9-$^1/_4$	BK255671
1	2	–	–	1	9-$^1/_2$	BK255670
1	1	–	1	1	10	BK255669
1	2	1	–	1	12-$^1/_4$	BK255676
1	1	1	1	1	12-$^3/_4$	BK255677
1	3	–	–	1	13	BK255678
1	2	–	1	1	13-$^1/_2$	BK255679

Recommended bolt torque 79 Nm (700 lb. in.).
* Assumes use of 4,4 mm (.17 inch) thick lockwasher.

Ordering Procedure

Valves, subplates and mounting bolts must be ordered separately.
Example:

One (1) DG5S-8-0C-M-W-B-2* Valve
One (1) DGX-H06-2-60 Reducing module
One (1) DGSM-8-10-T12 Subplate
One (1) BK255691 Inch bolt kit

Example for ordering:

(1) DG5S-8 Valve . . . . . 42,9 mm (1.69 in.)
(1) DGFN-06 Module . . . . . 88,9 mm (3.50 in.)
(1) DGPC-06 Module . . . . . 101,6 mm (4.00 in.)
+ Manifold thread engagement . . . . 20,6 mm (.81 in.)
Total bolt length . . . . . 254,0 mm (10.00 in.)
Order bolt kit number BK225669.

Mounting Subplates

Model No.	"E" Thd.	Tubing O.D.	"F" Dia.	Weight (approx.)
DGSM-8-10-T12	1.0625-12 UN	.750	23,8 (.937)	5.0 kg (11 lbs)
DGSM-8-10-T16	1.3125-12 UN	1.000	24,6 (.969)	5.0 kg (11 lbs)

Additional Subplates

Model No.	Tubing O.D. (thd. size)	System Connections
DGSME-8-10-T12	.750 O.D. (1.0625-12 UN thd.)	Side
DGSME-8-10-T16	1.000 O.D. (1.3125-12 UN thd.)	Side
DGSM-8-10-T20	1.250 O.D. (1.6250-12 UN thd.)	Rear

Mounting Subplate DGSM-8-10-T12/16

Dimensions in millimeters (inch)

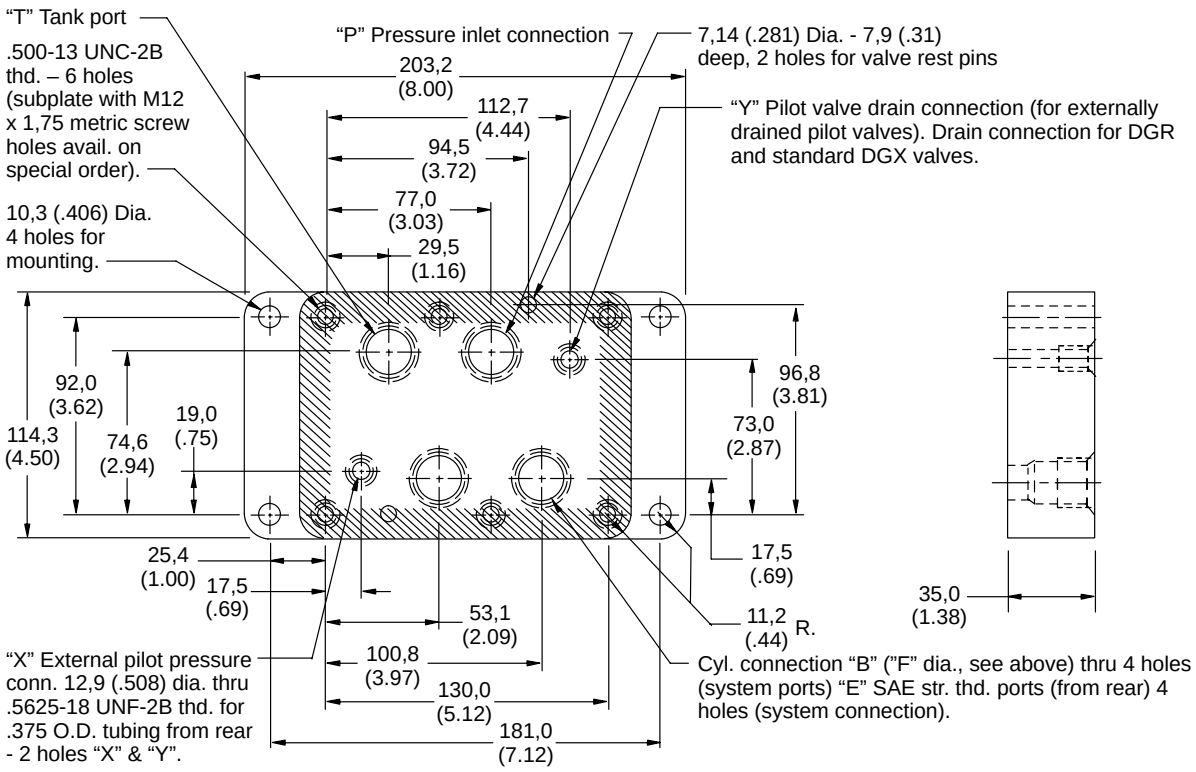

Application Data

Fluid Cleanliness

Proper fluid condition is essential for long and satisfactory life of hydraulic components and systems. Hydraulic fluid must have the correct balance of cleanliness, materials, and additives for protection against wear of components, elevated viscosity, and inclusion of air.

Essential information on the correct methods for treating hydraulic fluid is included in Vickers publication 561 “Vickers Guide to Systemic Contamination Control” available from your local Vickers distributor or by contacting Vickers, Incorporated. Recommendations on filtration and the selection of products to control fluid condition are included in 561.

Recommended cleanliness levels, using petroleum oil under common conditions, are based on the highest fluid pressure levels in the system and are coded in the chart below. Fluids other than petroleum, severe service cycles, or temperature extremes are cause for adjustment of these cleanliness codes. See Vickers publication 561 for exact details.

Vickers products, as any components, will operate with apparent satisfaction in fluids with higher cleanliness codes than those described. Other manufacturers will often recommend levels above those specified. Experience has shown, however, that life of any hydraulic component is shortened in fluids with higher cleanliness codes than those listed below. These codes have been proven to provide a long, trouble-free service life for the products shown, regardless of the manufacturer.

	System Pressure Level bar (psi)		
Product	**<70 (<1000)**	**70-210 (1000-3000)**	**210+ (3000+)**
Vane Pumps – Fixed	20/18/15	19/17/14	18/16/13
Vane Pumps – Variable	18/16/14	17/15/13	
Piston Pumps – Fixed	19/17/15	18/16/14	17/15/13
Piston Pumps – Variable	18/16/14	17/15/13	16/14/12
Directional Valves	20/18/15	20/18/15	19/17/14
Pressure/Flow Control Valves	19/17/14	19/17/14	19/17/14
CMX Valves	18/16/14	18/16/14	17/15/13
Servo Valves	16/14/11	16/14/11	15/13/10
Proportional Valves	17/15/12	17/15/12	15/13/11
Cylinders	20/18/15	20/18/15	20/18/15
Vane Motors	20/18/15	19/17/14	18/16/13
Axial Piston Motors	19/17/14	18/16/13	17/15/12
Radial Piston Motors	20/18/14	19/17/13	18/16/13

Fluids and Seals

Flourocarbon seals are standard and are suitable for use with phosphate ester type fluids or their blends, water glycol, water-in-oil emulsion fluids and petroleum oil. Refer to data sheet I-286-S for hydraulic fluid and temperature recommendations.

Service Drawings		Dwg No.
DGC-*06	Pressure Relief Module	I-3381-S
DGC5-060A	Solenoid Controlled Relief Module	I-3425-S
DGR-06	Pressure Sequence Module	I-3649-S
DGX-*06	Pressure Reducing Module	I-3650-S
DGPC-06	Pilot Operated Check Module	I-3397-S
DGFN-06	Flow Regulator Module	I-3384-S

Eaton Hydraulics
15151 Highway 5
Eden Prairie, MN 55344
Telephone: 612 937-7254
Fax: 612 937-7130
www.eatonhydraulics.com

46 New Lane, Havant
Hampshire PO9 2NB
England
Telephone: (44) 170-548-6451
Fax: (44) 170-548-7110