Vickers®

Service Data

Pressure Relief

Pressure Relief Module

DGMC2-3-AB-*W-BA-*W-31

Model	Spring	Pressure Relief Module	Pressure Range	
			bar	(PSI)
DGMC2-3-AB-BW-BA-BW-31	531671	531928	10 - 70	145-1000
DGMC2-3-AB-CW-BA-CW-31	531672	531529	30-140	435-2000
DGMC2-3-AB-FW-BA-FW-31	531673	531930	50-250	725-3600

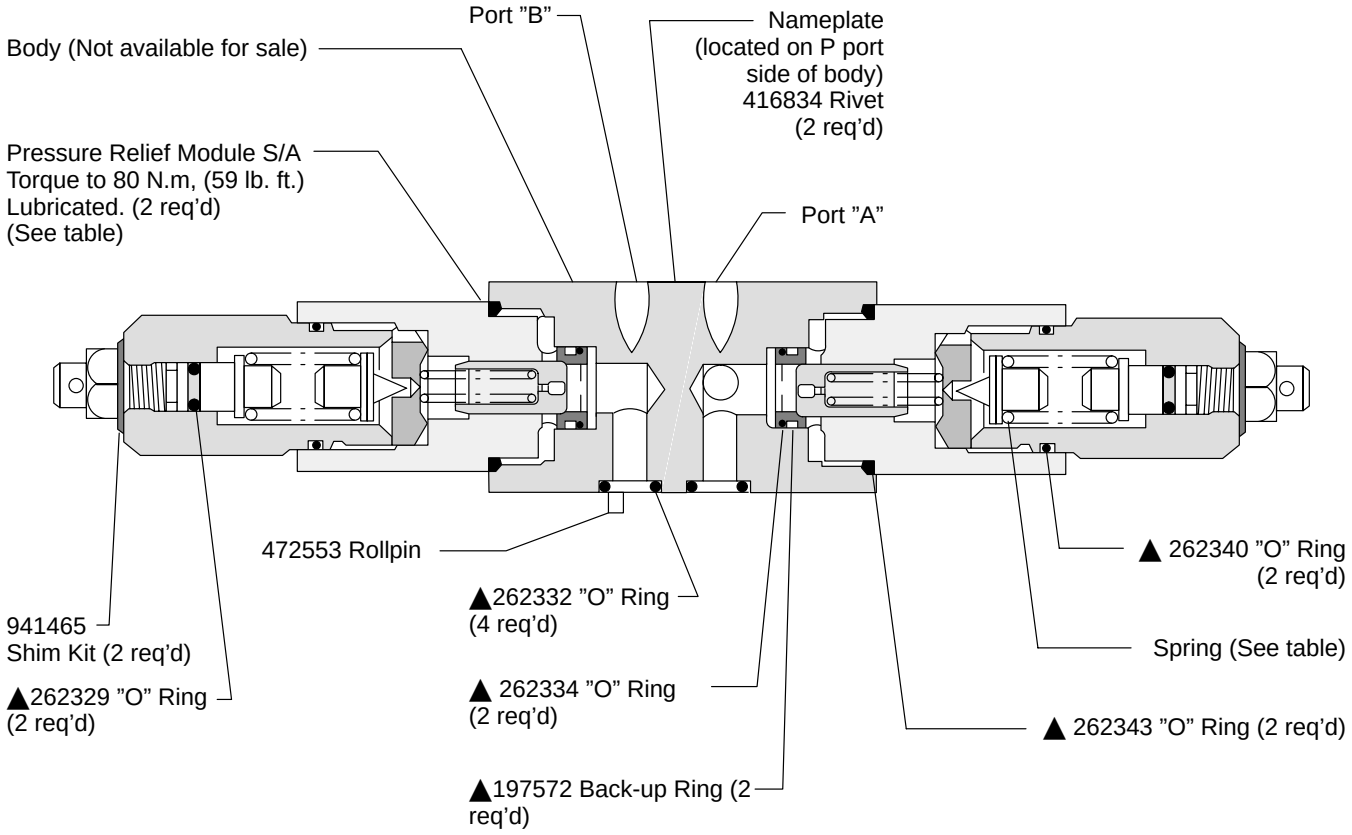

▲ Included in F3 Seal Kit 920252

Model Code

DGMC2 - 3 - A B - * W - B A - * W - 31

1 2 3 4 5 6 7 8 9 10 11

1 Model Series

DGM - Modular valves, service line relief module

2 Interface

CETOP 3
NFPA-D-01

3 Port Operated Upon

A Port

4 Port Drained to

B Port

5 Pressure Controls Adjustment Range bars (PSIG)

	Bar	PSI
B -	10-70	(145-1000)
C -	30-140	(435-2000)
F -	50-250	(725-3600)

6 Adjustment Mechanism

Standard wrench adjustment

7 Port Drained to

B Port

8 Port Operated Upon

A Port

9 Pressure Controls Adjustment Range bars (PSIG)

	Bar	PSI
B -	10-70	(145-1000)
C -	30-140	(435-2000)
F -	50-250	(725-3600)

10 Adjustment Mechanism

Standard wrench adjustment

11 Design

For satisfactory service life of these components, use full flow filtration to provide fluid which meets ISO cleanliness code 20/18/15 or cleaner. Selections from Eaton OFP,OFR and OFRS filter series are recommended.

Printed in U.S.A.