Check Valves

Direct Check Valve Module

(F3) DGMDC-5-T-X-*-20

Insta–Plug & Indicator Lights

Insta-Plug

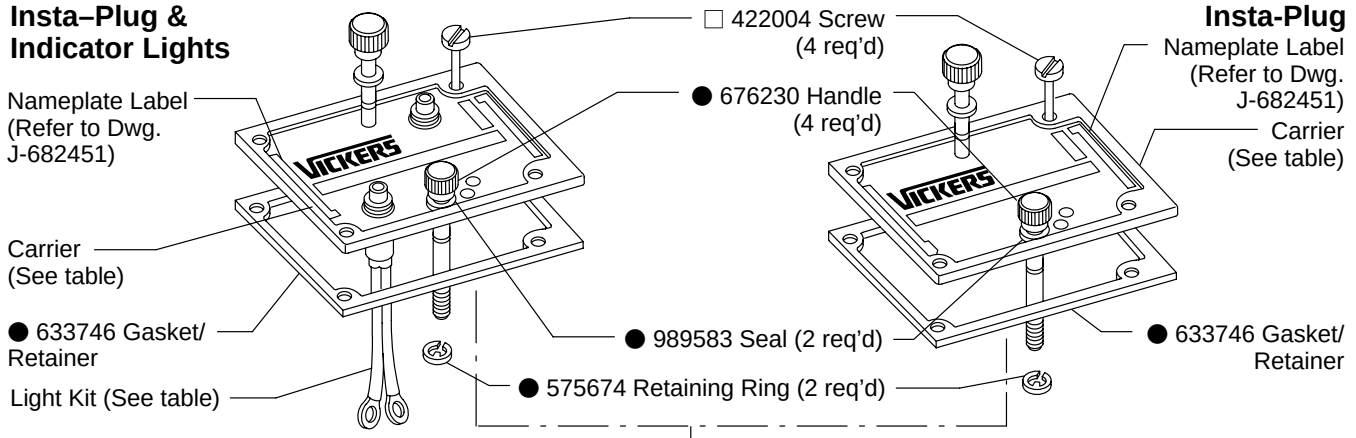

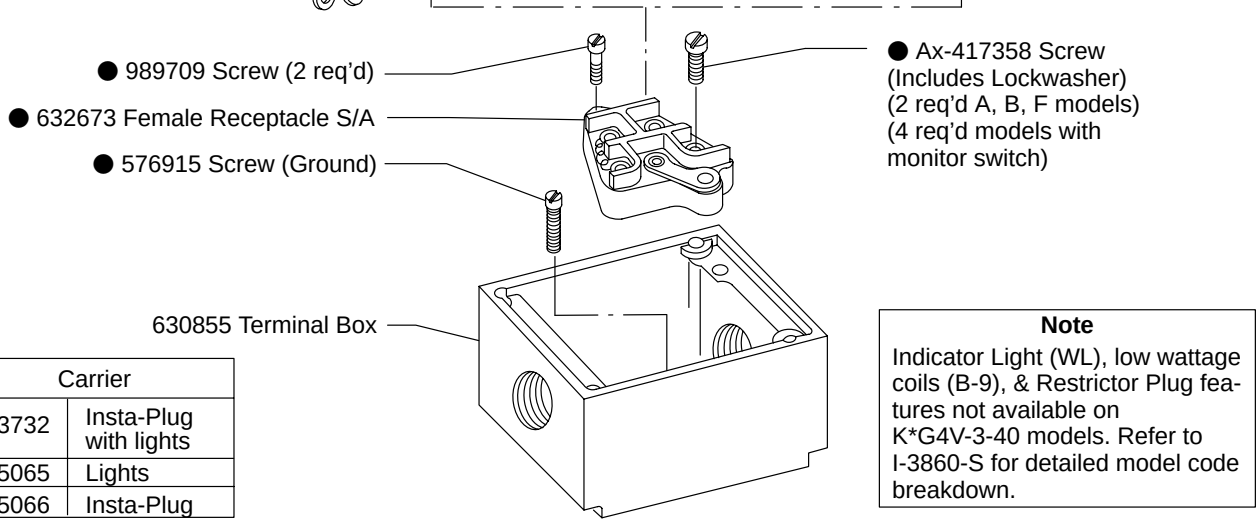

Carrier	
633732	Insta-Plug with lights
635065	Lights
635066	Insta-Plug

Note

Indicator Light (WL), low wattage coils (B-9), & Restrictor Plug features not available on K*G4V-3-40 models. Refer to I-3860-S for detailed model code breakdown.

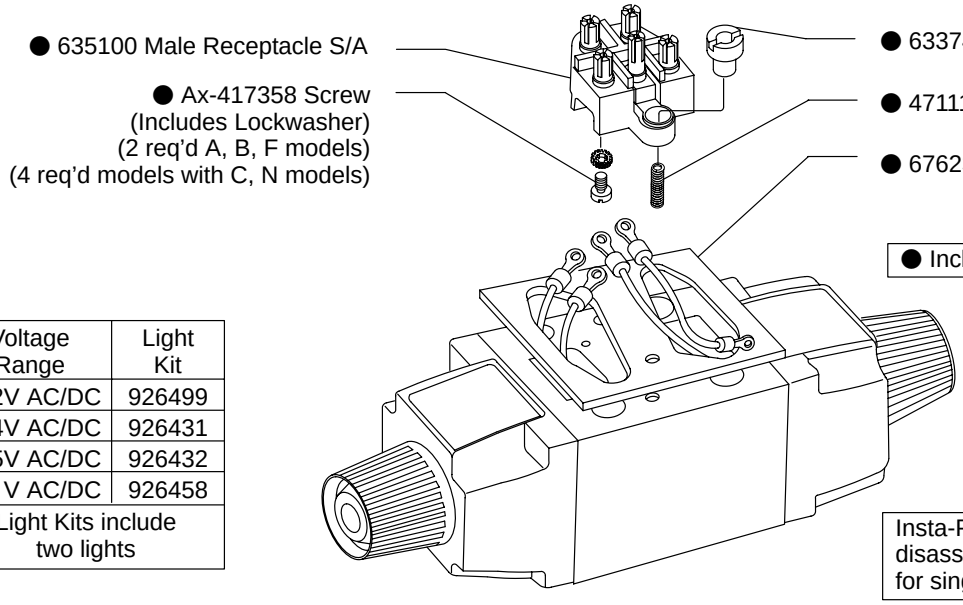

● Included in 926455 Insta-Plug Kit

Voltage Range	Light Kit
12V AC/DC	926499
24V AC/DC	926431
115V AC/DC	926432
230 V AC/DC	926458
Light Kits include two lights	

□ Lot Kits (25 pcs. only)	
Part No.	Kit No.
422004	944066

Parts prefixed with symbol available only in kit

Insta-Plug part numbers & assembly/ disassembly sequence are the same for single & double solenoid models.

Electrical Connector & Wiring Diagram

Connector Type	Part Number	Warning Tag
3 Pin	400784	400881
5 Pin	409706	400882
Electrical power must be disconnected before removing or replacing electrical plug		

A - 3 Pole Single Solenoid Models
B - 5 Pole Single Solenoid Models
C - 5 Pole Double Solenoid Models
D - 5 Pole Single Solenoid & Monitor Switch Models (Wired Normally Open)
E - 5 Pole Single Solenoid & Monitor Switch Models (Wired Normally Closed)

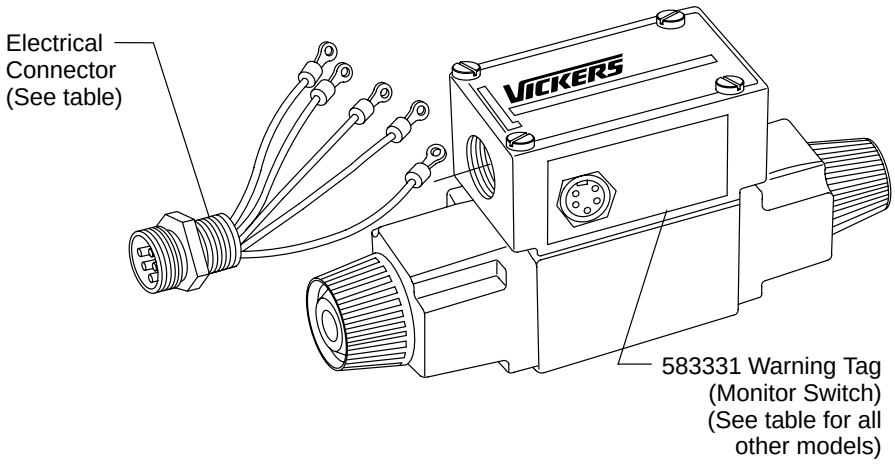

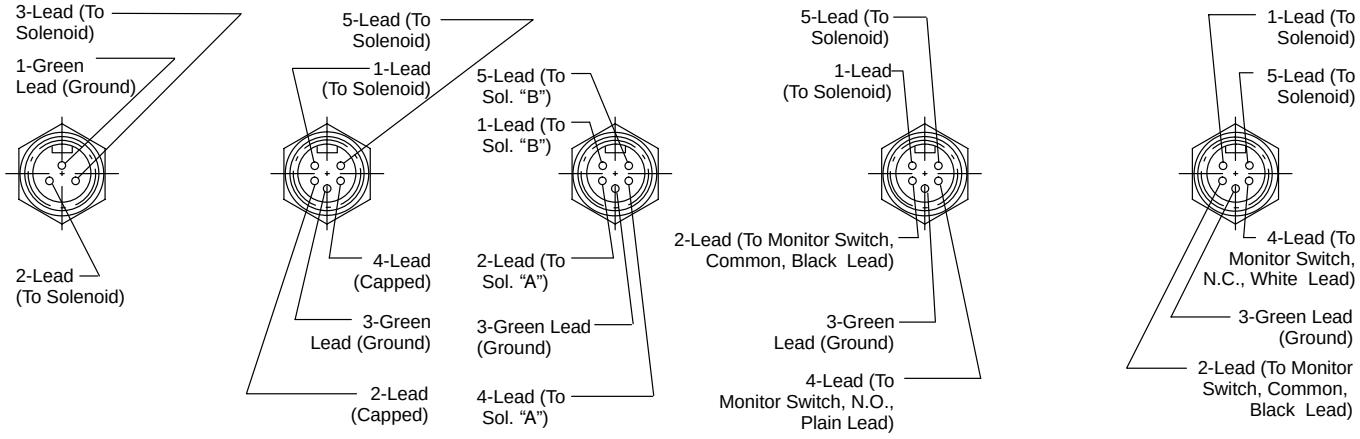

Model Code

(K) DG4 V - 3 - * * * (L) - M (S) (P) - **- *- (9) - (***) - 40**

1 2 3 4 5 6 7 8 9 10 11 12 13 14 15 16

1 Proportional Valve

2 Model Series

DG4 - Directional Valve, subplate or manifold mounted, solenoid operated

3 Maximum Pressure

Rating 350 bar (5000 PSI)

4 Interface

NFPA/D01/ISO-4401-3

5 Spool Type

6 Spool Spring Arrangement

7 Manual Override
(Omit when not req'd)

8 Left Hand
(Omit when not req'd)

9 Flag Symbol Heading Electrical Features and Options

10 Monitor Switch

11 Electrical Features

PA3- 3 pin reciptacle (single solenoid only)
PA5 - 5 pin receptacle
PB - Insta-Plug male & female receptacle

12 Electrical Options

U - DIN 43650 Coil
W - Wiring hsg. 1/2 NPT thread
WL- Wiring hsg. 1/2 NPT thread (with indicator lights)

13 Coil Code Letter

14 Low Wattage Coil
(B Coil only)

15 Restrictor Plug
(Omit when not req'd)

16 Design