Vickers®

Check Valves

Pressure Operated Check Valves

DGPC-01-A*B*-51
DGPC-06-A*B*-51

Model Code

DG PC - 01 - A * B * - 51

1 2 3 4 5 6 7 8

1 Model Series

Directional control manifold or subplate mounted

2 Model Series

Pressure operated check module

3 Port Size

1/8 inch

4 Check Valve Location

Cylinder port ‘A’

5 Check Valve Cracking Pressure

Cylinder port ‘A’
(Omit for standard 30 PSI)

6 Check Valve Location

Cylinder port ‘B’

7 Check Valve Cracking Pressure

Cylinder port ‘B’
(Omit for standard 30 PSI)

8 Design

CAUTION
This valve cannot be used with pressure centered or DG-18 air operated valves.

● Included in 347456 S/A

NOTE
Refer to installation drawing 522650 for bolt kit information and module stacking data. The mounting bolt torque should not exceed a maximum of 112 lb. in. Subplate information is tabulated on parts drawing I-3381-S.

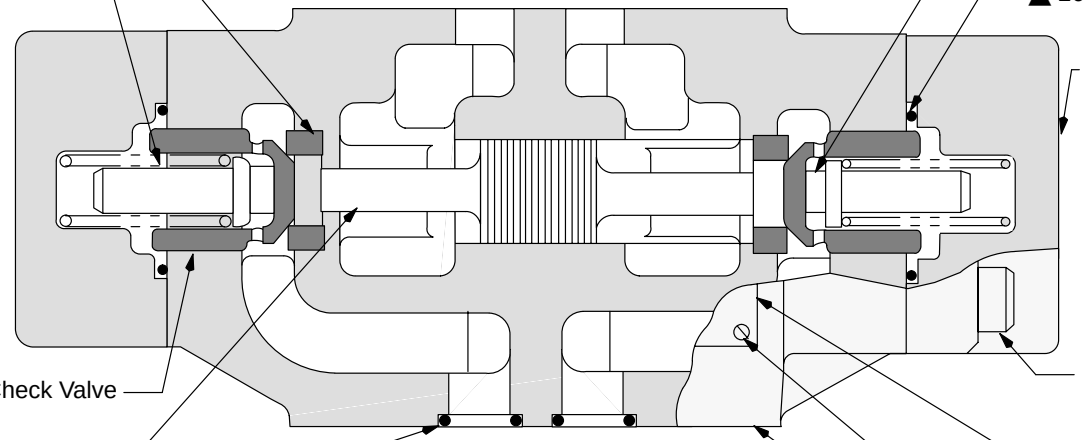

▲ Included in 920215 F3 Seal Kit

Model Code

DG PC - 06 - A * B * - 51

1 2 3 4 5 6 7 8

1 Model Series

Directional control manifold or subplate mounted

2 Model Series

Pressure operated check module

3 Port Size

3/4 inch

4 Check Valve Location

Cylinder port ‘A’

5 Check Valve Cracking Pressure

Cylinder port ‘A’
(Omit for standard 30 PSI)

6 Check Valve Location

Cylinder port ‘B’

7 Check Valve Cracking Pressure

Cylinder port ‘B’
(Omit for standard 30 PSI)

8 Design

CAUTION
This valve cannot be used with pressure centered or DG-18 air operated valves.

● Included in 349164 S/A

NOTE
Refer to installation drawing 522650 for bolt kit information and module stacking data. The mounting bolt torque should not exceed a maximum of 112 lb. in. Subplate information is tabulated on parts drawing I-3381-S

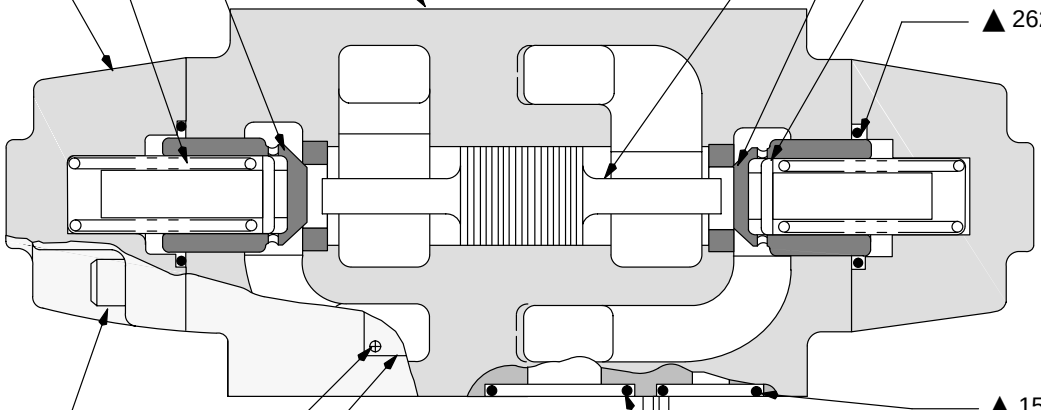

▲ Included in 920216 F3 Seal Kit

© Eaton Hydraulics, Incorporated 2000
All Rights Reserved

Printed in U.S.A.