Service Data

Vickers®

Pressure Controls

Flange Mounted Pressure Control Valves

CPF3*-08/10/12-*-*-20 Bi-Pressure with Maximum Pressure Override
CPF4*-08/10/12-*-*-20 Tri-Pressure

Released 8–01–93

I–3779–S

CPF3/4S–06/08

CODE	■ PRESSURE ADJ. S/A Head 1,2 & 3	MAX. PRESSURE bar (psi)
AW	02-140463	50 (725)
BW	02-140464	100 (1450)
FW	02-140465	207 (3000)
GW	02-140466	275 (4000)
AH	02-140467	50 (725)
BH	02-140468	100 (1450)
FH	02-140469	207 (3000)
GH	02-140470	275 (4000)
AK	02-140471	50 (725)
BK	02-140472	100 (1450)
FK	02-140473	207 (3000)
GK	02-140474	275 (4000)

Torque S/A to 65–75 N.m (48–55 lb.ft.)

RELIEF VALVE BLOCK	
Internal Drain	02–155251
Externail Drain	02–301152 SAE
(Shown)	02–301153 BSP

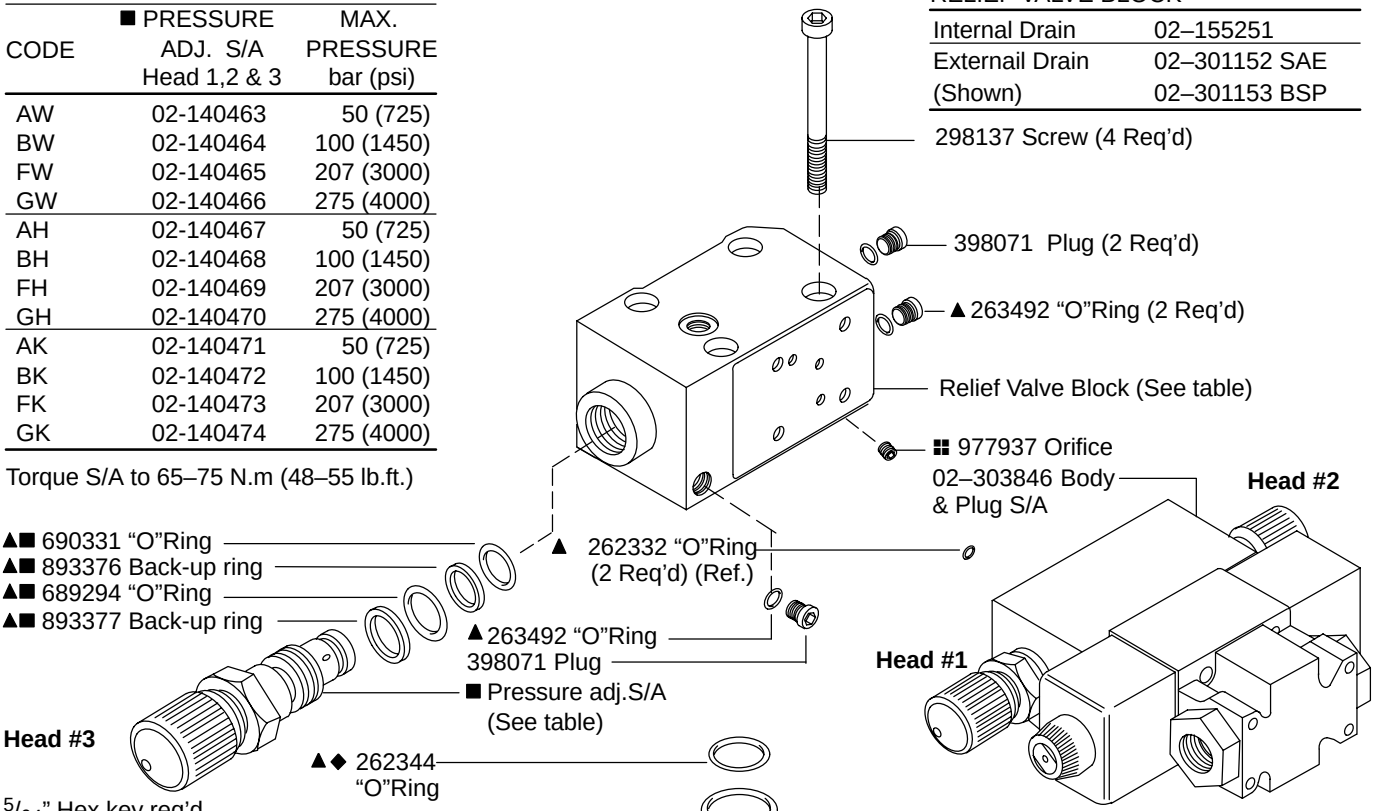

Use DG4V3(S)–0C–*–60 for CPF3**
Use DG4V3(S)–2C–*–60 for CPF4**

Refer to I–3886–S for pilot valve parts breakdown

675148 Pilot Valve Attaching Screws (4 req'd) (Ref.)
Torque 4.5–5.7 N.m (3.3–4.2 lb. ft.)

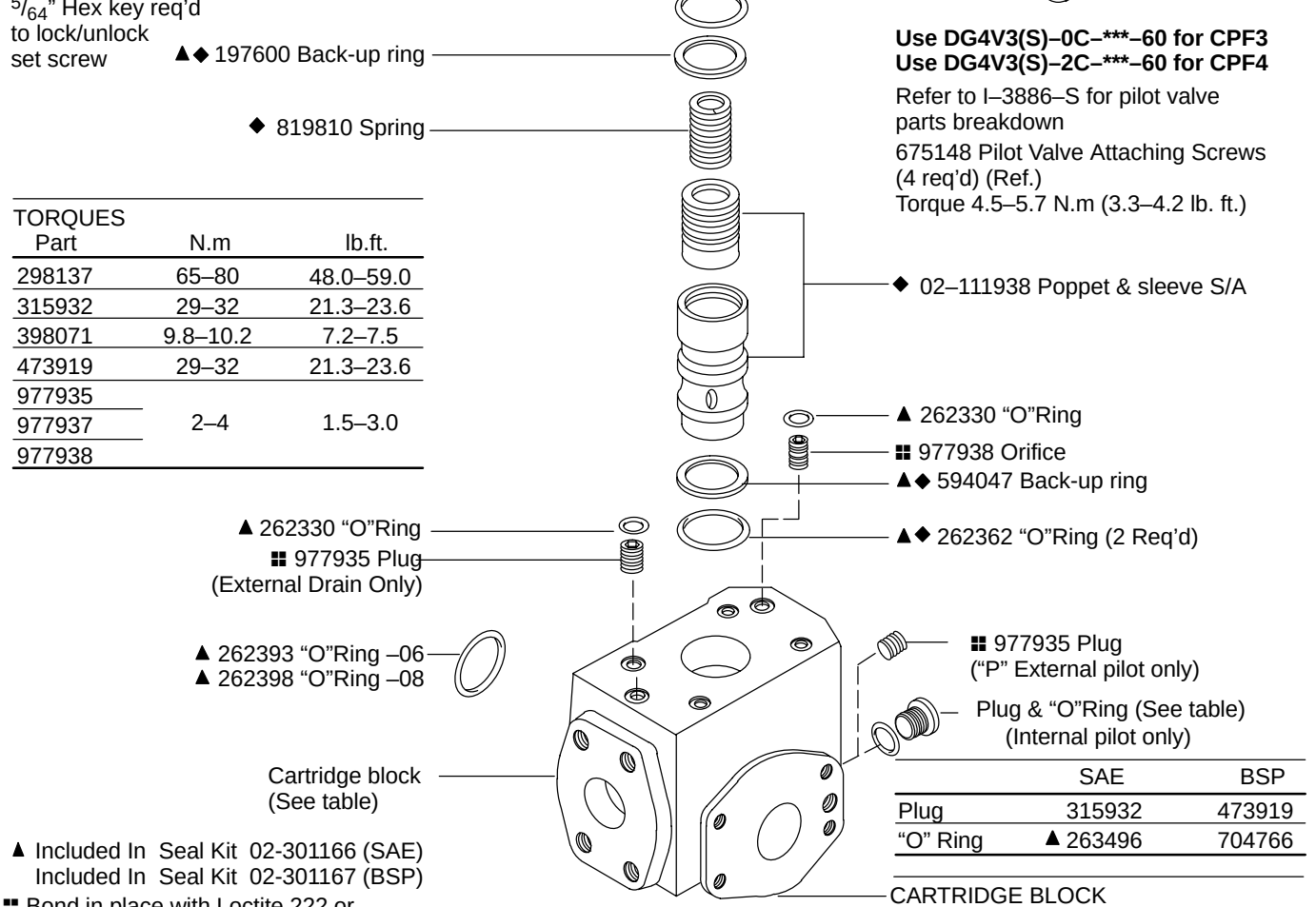

TORQUES Part	N.m	lb.ft.
298137	65–80	48.0–59.0
315932	29–32	21.3–23.6
398071	9.8–10.2	7.2–7.5
473919	29–32	21.3–23.6
977935	2–4	1.5–3.0
977937		
977938		

	SAE	BSP
Plug	315932	473919
"O" Ring	▲ 263496	704766

CARTRIDGE BLOCK SIZE	SAE	BSP
06	02–155245	02–155265
08	02–155247	02–155267

▲ Included In Seal Kit 02-301166 (SAE)
Included In Seal Kit 02-301167 (BSP)

■■ Bond in place with Loctite 222 or equivalent

Parts prefixed with symbols available only in kits.

© Eaton Hydraulics, Incorporated 2000
All Rights Reserved

CPF3/4*–10/12

CODE	■ PRESSURE ADJ. S/A Head 1, 2, 3	MAX. PRESSURE bar (psi)
AW	02-140463	50 (725)
BW	02-140464	100 (1450)
FW	02-140465	207 (3000)
GW	02-140466	275 (4000)
		350 (5000)
AH	02-140467	50 (725)
BH	02-140468	100 (1450)
FH	02-140469	207 (3000)
GH	02-140470	275 (4000)
		350 (5000)
AK	02-140471	50 (725)
BK	02-140472	100 (1450)
FK	02-140473	207 (3000)
GK	02-140474	275 (4000)
		350 (5000)

Torque S/A to 65–75 N.m (48–55 lb.ft.)

RELIEF VALVE BLOCK	
Internal Drain	02–155258
External Drain	02–301156 SAE 02–301157 BSP

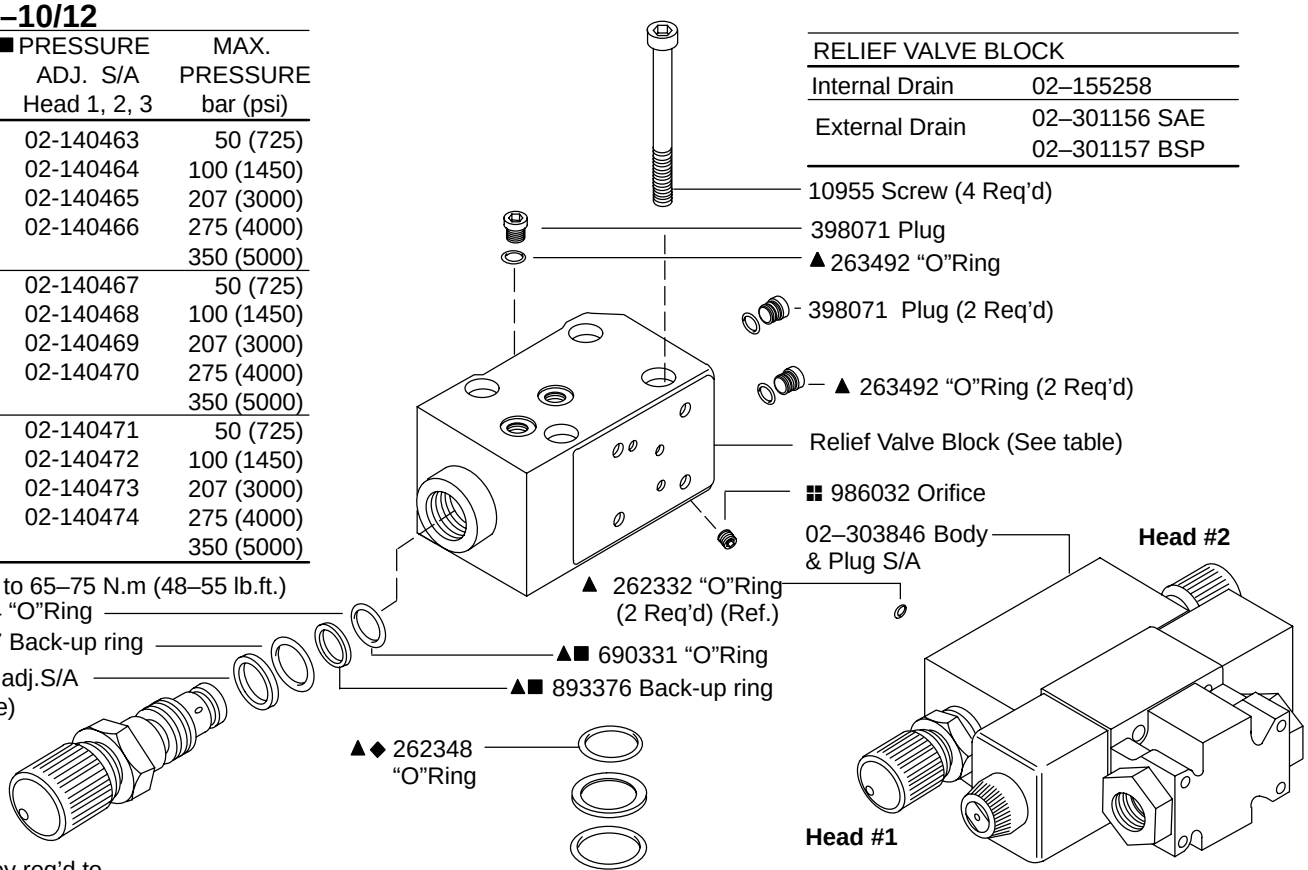

5/64" Hex key req'd to lock/unlock set screw

Use DG4V3(S)–0C–*–60 for CPF3**
Use DG4V3(S)–2C–*–60 for CPF4**

Refer to I–3886–S for pilot valve parts breakdown

675148 Pilot Valve Attaching Screws
(4 req'd) (Ref.)
Torque 4.5–5.7 N.m (3.3–4.2 lb. ft.)

◆ 02–157559 Cartridge valve insert

TORQUES Part	N.m	lb.ft.
10955	110–115	81.1–84.8
315932	29–32	21.3–23.6
398071	9.8–10.2	7.2–7.5
473919	29–32	21.3–23.6
873753	2–4	1.5–3.0
977935		
986032		

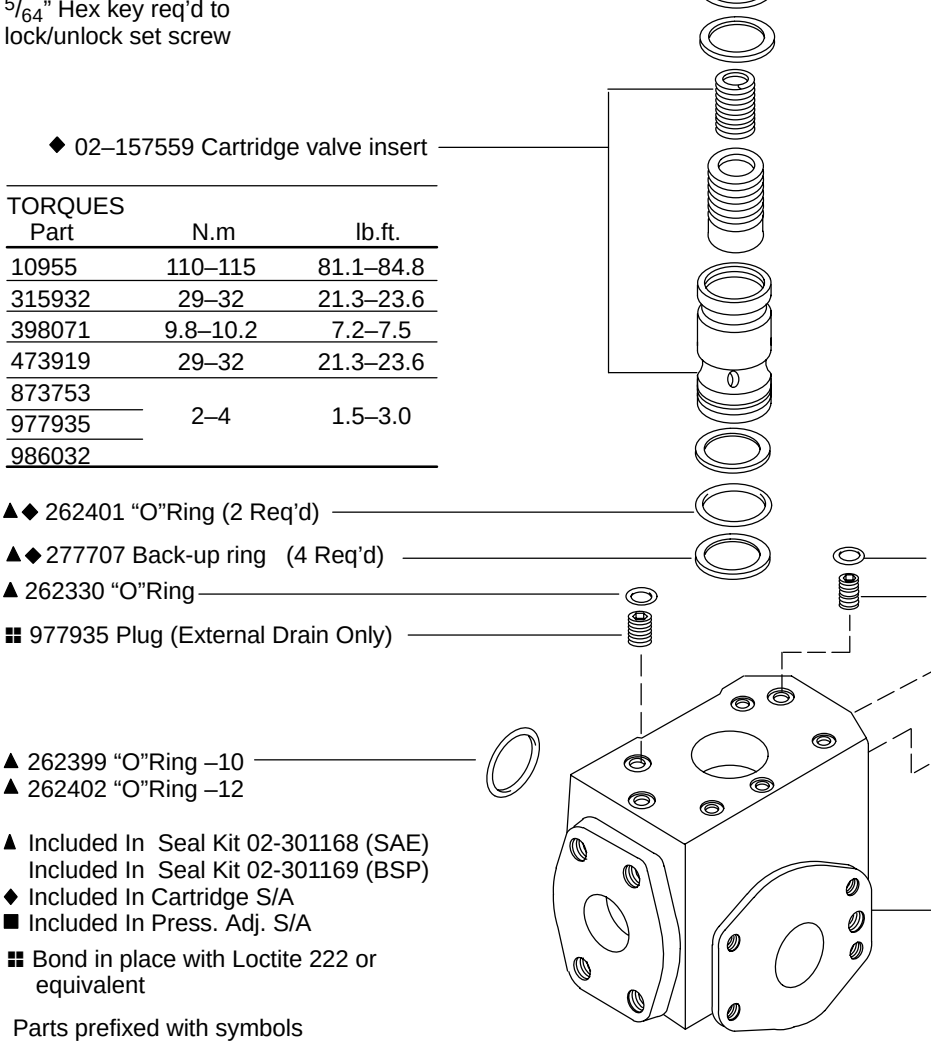

	SAE	BSP
PLUG	315932	473919
"O" RING	▲ 263496	704766

CARTRIDGE BLOCK SIZE	SAE	BSP
10	02–155254	02–155269
12	02–155260	02–155850
V12	02–155263	02–155852

▲ Included In Seal Kit 02-301168 (SAE)
Included In Seal Kit 02-301169 (BSP)
◆ Included In Cartridge S/A
■ Included In Press. Adj. S/A
⠿ Bond in place with Loctite 222 or equivalent

Parts prefixed with symbols available only in kits.

MODEL CODE BREAKDOWN

C PF * * - 06 - F * * - * - (B) - (P) - (1) - 3 (S) - (*) - (V) - M - (S*) - * (L) - * * - 20**

1 2 3 4 5 6 7 8 9 10 11 12 13 14 15 16 17 18 19 20 21 22

1 Valve Function

C - Relief

2 Mounting Type

PF - Pump flange mounting

3 Unit Type

3 - Bi-pressure with safety
4 - Tri-pressure

4 Flange Type

S - SAE J518C 4-bolt flange standard series code 61 (All sizes)
V - SAE J518C 4-bolt high pressure code 62 (12 size only)

5 Valve Size

06 - $^3/_4$ inch
08 - 1 inch
10 - 1 $^1/_4$ inch
12 - 1 $^1/_2$ inch

6 Head 1 Maximum Pressure Adjustment

A - 50 bar (725 psi)
B - 100 bar (1450 psi)
F - 207 bar (3000 psi)
G - 275 bar (4000 psi)
350 bar (5000 psi) - (CPF*V-12 models only)

7 Head 2 Maximum Pressure Adjustment

A - 50 bar (725 psi)
B - 100 bar (1450 psi)
F - 207 bar (3000 psi)
G - 275 bar (4000 psi)
350 bar (5000 psi) - (CPF*V-12 models only)

8 Head 3 Maximum Pressure Adjustment

A - 50 bar (725 psi)
B - 100 bar (1450 psi)
F - 207 bar (3000 psi)
G - 275 bar (4000 psi)
350 bar (5000 psi) - (CPF*V-12 models only)

Note: Head 3 is the maximum pressure override adjustment. The pressure range selection should be at least 250 psi higher than those for Heads 1 and 2.

9 Control Type

W - Screw adjust with locknut
H - Handknob adjust without key
K - Micrometer adjust with keylock

10 Thread Type

Remote Control/Vent Connection
Blank - SAE-6 O-ring boss port (.5625-18 UNF-2B thd.)
B - BSP-G $^1/_4$ ($^1/_4$" BSPF)

11 Remote Pilot

Blank - Internal pilot
P - External pilot

12 Remote Drain

Blank - Internal drain
1 - External drain

13 Vent Valve

3 - Standard performance
3S - High performance -
Uses OC type spool/spring arrangement for CPF3 and 2C type spool/spring arrangement for CPF4; other features are optional. Refer to Vickers service literature I–3866–S.

14 Manual Override Options

15 Solenoid Energization Identification

16 Electrical Options Flag

17 Spool Position Monitoring Switch

18 Solenoid Type/Electrical Connections

19 Indicator Lights

20 Coil Identification

21 Tank Rating Pressure

2 - 10 bar (145 psi) for spool position indicator models.
5 - 100 bar (1450 psi) for standard performance models, DG4V-3(S), with AC or DC solenoids.
6 - 210 bar (3045 psi) for high performance models, DG4V-3, with AC solenoids.
7 - 210 bar (3045 psi) for high performance models, DG4V-3 with DC solenoids.

22 Design Number, 20 series

Printed in U.S.A.