Vickers®

Check Valves

Service Parts Information

Pilot Operated Check Valve

4CT-06-(D)*-20
4CG-06-(D)*-20

Model	Spring	P.S.I.	Check Valve	Guide Poppet
4CT-06-A-20	354636	30	359859	359860
4CT-06-DA-20			342366	354644
4CT-06-B-20	386660	50	359859	359860
4CT-06-C-20	388352	75		
4CT-06-DC-20			342366	354644
4CT-06-F-20	388353	150	359859	388358
4CT-06-DF-20			342366	388359

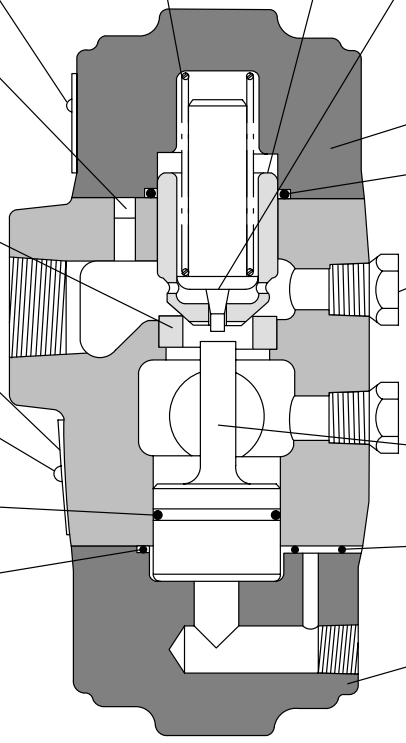

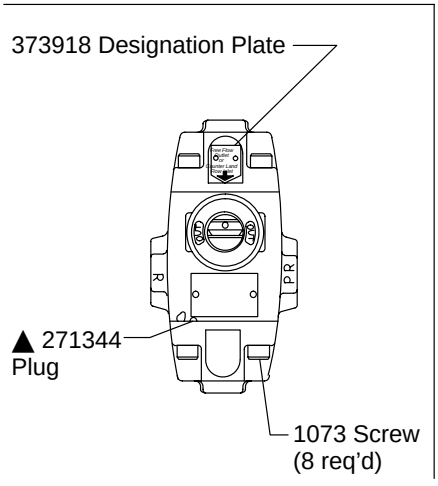

▲ Included in F3 Seal Kit 919675

VICKERS

Model Code

4C * - 06 - (D) * - 20

1 2 3 4 5 6

1 Model Series

4C - Pilot operated check valve

2 Mounting

G - Gasket mounted
T - Threaded connection

3 60 Series

4 Decompression Feature

Omitted - No decompression feature

5 Pressure Range

A - 30 psi
B - 50 psi
C - 75 psi
F - 150 psi

6 Design

4CG-06-(D)-20

Model	Spring	PSI	Guide Poppet	Check Valve
4CG-06-A-20	354636	30	359860	359859
4CG-06-DA-20			354644	342366
4CG-06-B-20	386660	50	359860	359859
4CG-06-C-20	388352	75		
4CG-06-DC-20			354644	342366
4CG-06-F-20	388353	150	388358	359859
4CG-06-DF-20			388359	342366

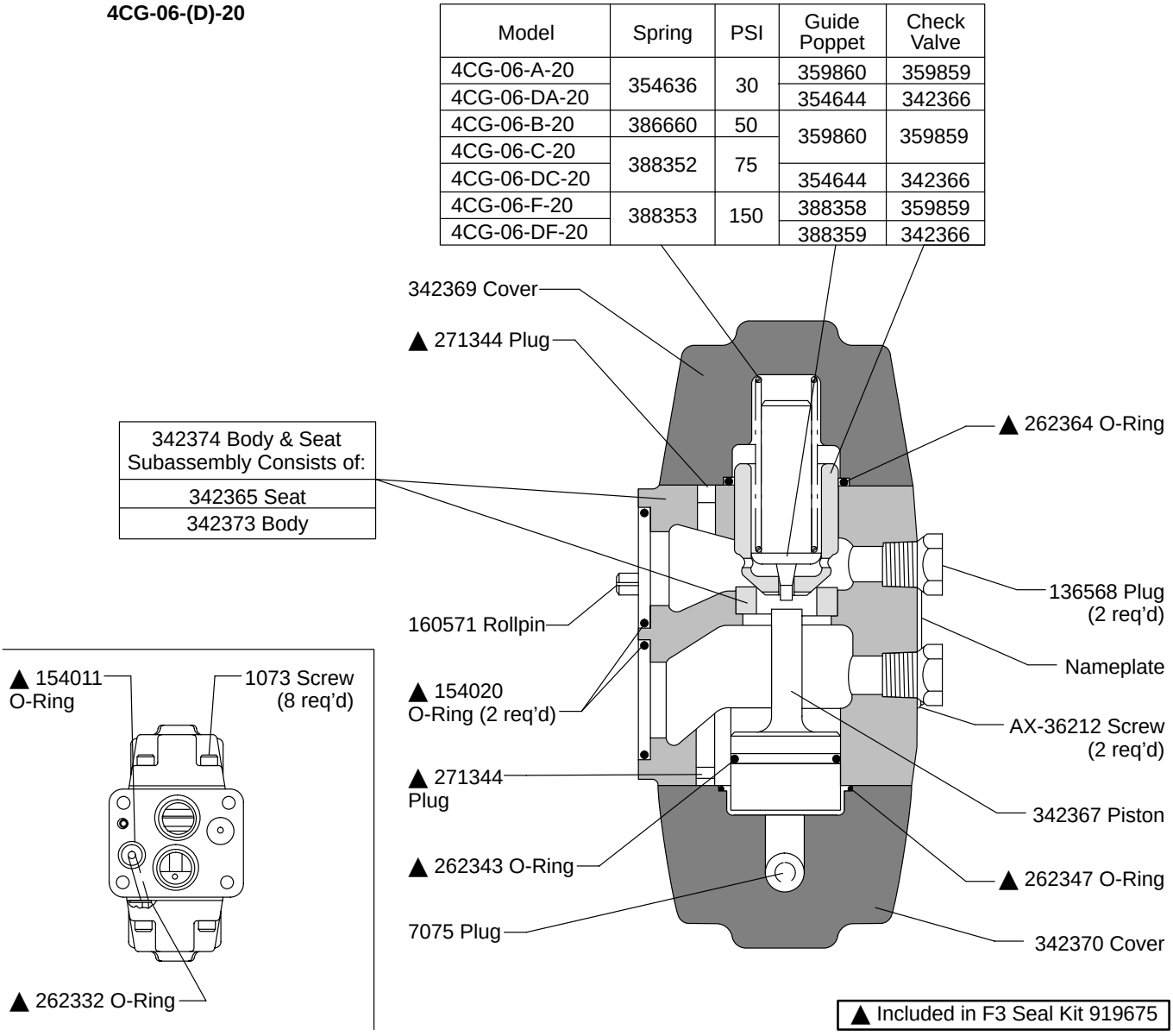

▲ Included in F3 Seal Kit 919675

For satisfactory service life of these components, use full flow filtration to provide fluid which meets ISO cleanliness code 20/18/15 or cleaner. Selections from Eaton OFP,OFR and OFRS filter series are recommended.

Printed in U.S.A.