MDG Mobile Directional Valve
Build Kit

MDG for Mobile Equipment
Flows to 60 l/min (15.8 US gpm)

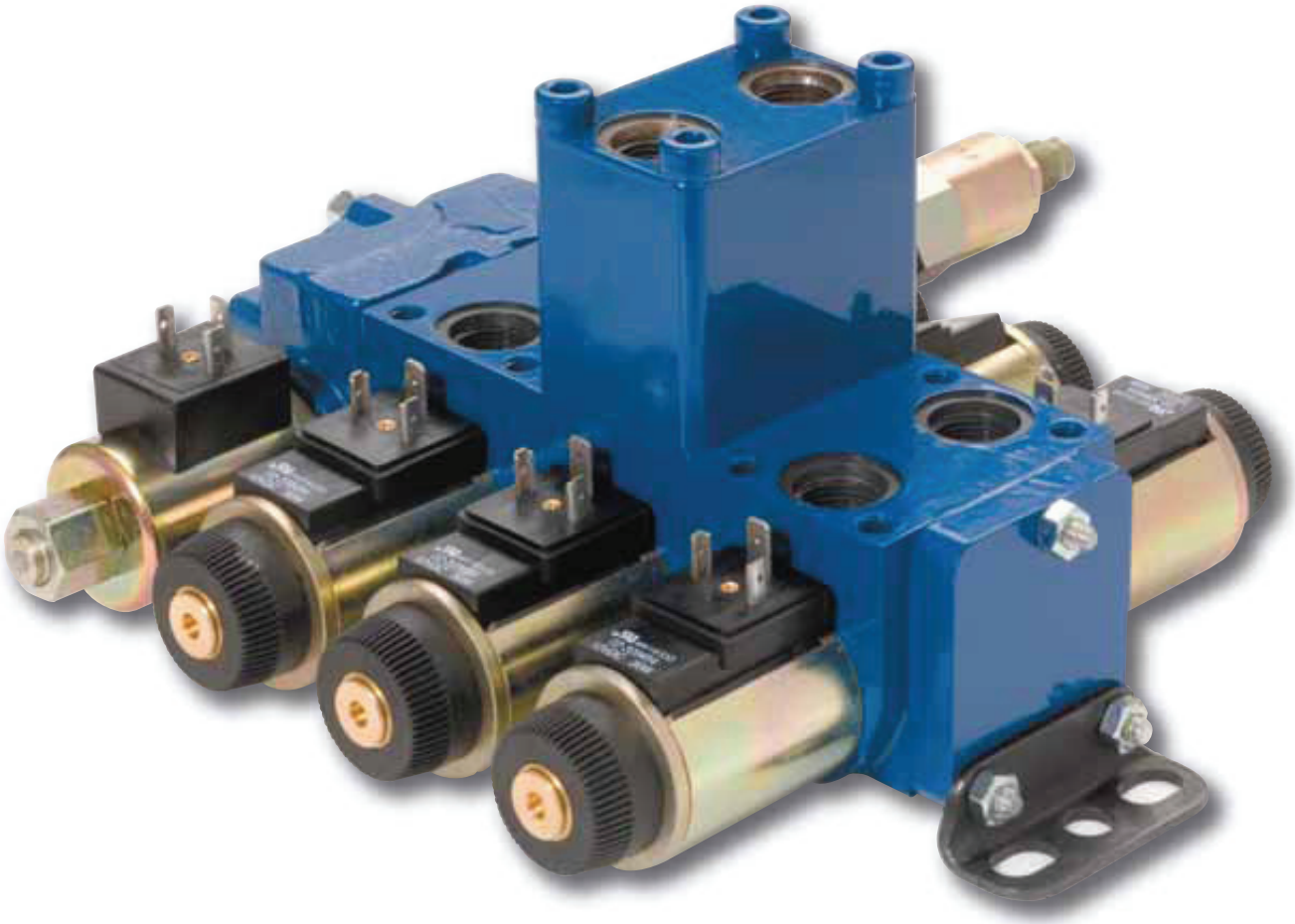

Powering Business Worldwide

MGD Build Kit Program

The MDG Valve Build Kit Program leverages the versatile and modular product design of the MDG valve; enabling a stocking distributor to add further value for end customers in the following ways:

- FIRST TO DELIVER a custom MDG valve solution for a customer requirement.
- QUICK RESPONSE to dynamic customer needs and modifications.

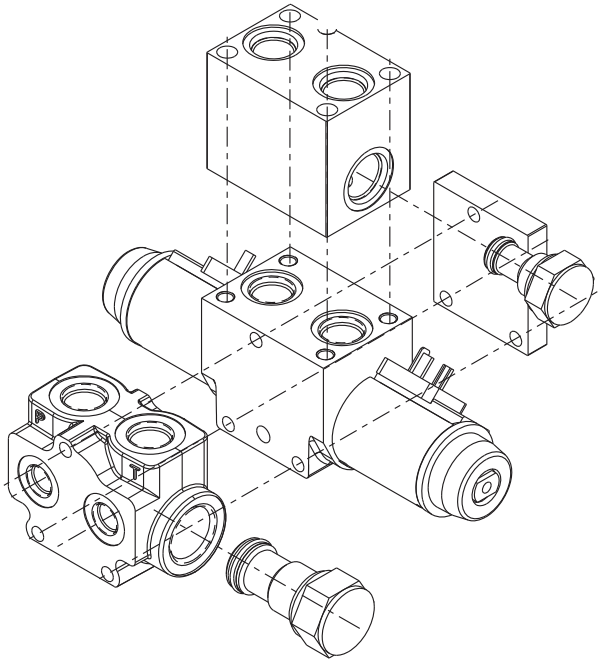

Product Overview

Flows to 60 l/min (15.8 US gpm)

Rated Pressures per NFPA T 2.6.1:

P, A & B: 350 bar (5000 psi)

T: 210 bar (3000 psi)

The Eaton MDG mobile directional control valve is a versatile and modular design based upon the proven Eaton Vickers™ industry leading DG4V3 design. The MDG valve design is a closed center, parallel or series circuit, that can also function as an open center circuit through the use of unloading inlet options.

The MDG valve offers versatility and flexibility in system applications through a sectional design, allowing the use of up to six sections per bank assembly. Further, the MDG valve can be configured to create custom, multi-functional circuits through the use of optional banking functions such as inlet and work port options.

For further technical information, reference document E-VLDI-MCOO3-E.

Features and Benefits

Modularity

- Sectional design allows the use of up to six sections per bank assembly.

Flexibility and Versatility

- Optional banking functions with various inlet and work port options.

Performance and Reliability

- Mobile design is based upon Eaton Vickers industry leading DG4V3 DG valve.
- Meets key OEM specifications regarding temperature, vibration, heat rise/drop, impact test, water dunk (thermal shock and hermetic seal), salt spray, and dielectric strength test.
- Modular banking design concept eliminates costly fittings and potential leak points.

MDG Assembly

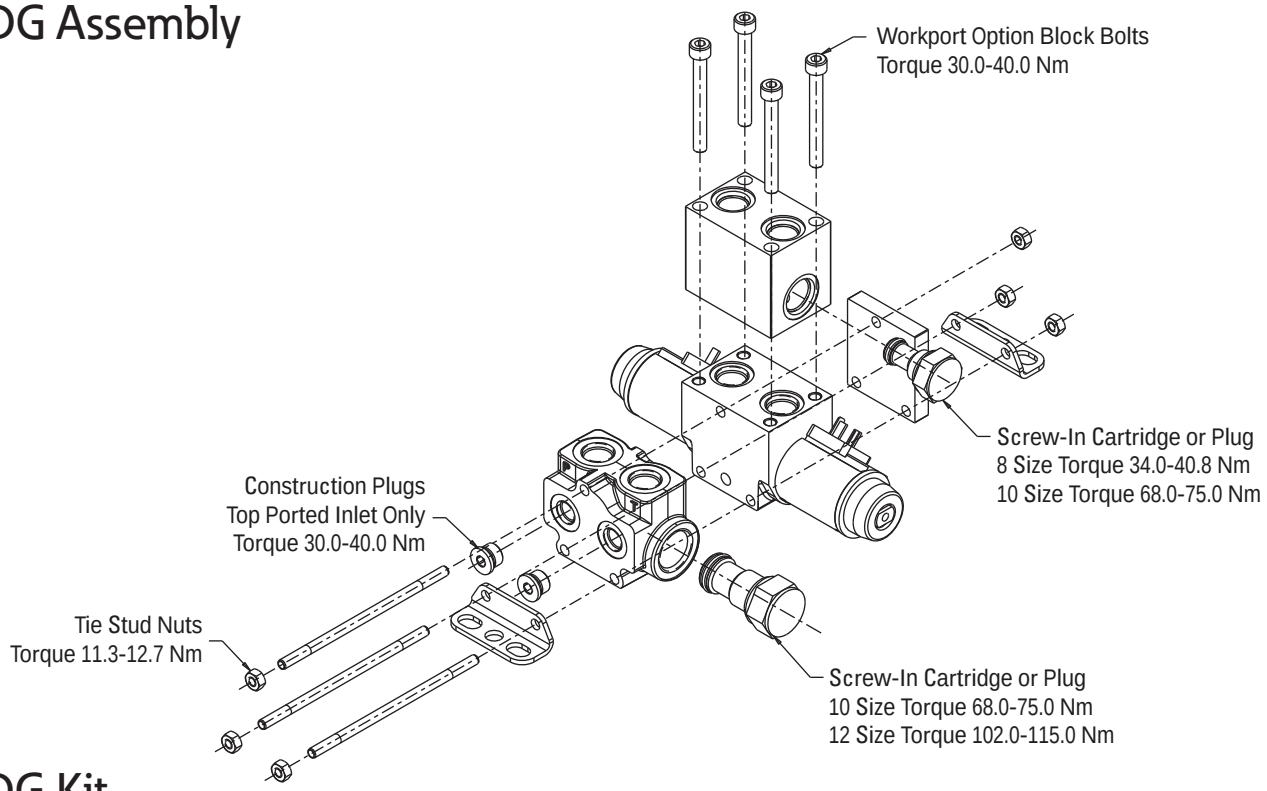

MDG Kit Components

Inlet Module

PART NUMBER	DESCRIPTION
02-397492	Top ports, SAE -8, C-10-2 plugged cavity
02-396089	Top ports, SAE -8, C-12-2 plugged cavity
02-397488	End ports, SAE -8, C-10-2 plugged cavity
02-396009	End ports, SAE -8, C-12-2 plugged cavity

Work Port Option Blocks

PART NUMBER	DESCRIPTION
02-396077	Single PO check, C-10-3-S cavity
02-397512	Dual PO check, C-8-4 cavity
02-396078	Single port relief, (2) C-10-2 cavities
02-397502	Dual port reliefs, (2) C-10-2 cavities
02-397527	Dual counterbalance, (2) C-10-3-S cavities

End Cover

PART NUMBER	DESCRIPTION
02-396044	Without ports – to be used for parallel sections
02-397506	Standard tank port – to be used for series sections

Accessories

PART NUMBER	DESCRIPTION
02-397521	Tie bolt set for (1) section assembly
02-397522	Tie bolt set for (2) section assembly
02-397523	Tie bolt set for (3) section assembly
02-397524	Tie bolt set for (4) section assembly
02-397525	Tie bolt set for (5) section assembly
02-397526	Tie bolt set for (6) section assembly
02-396092	Bolt kit for work port option block
02-396013	(1) Mounting bracket

SiCV Cartridges

PART NUMBER	DESCRIPTION
565541	Normally open, 210 bar solenoid operated bypass (SV3-10-O)
02-175813	Normally open, 350 bar solenoid operated bypass (SV13-10-O)
566246	Screw adjust relief, 17-240 bar range (RV5-10)
565572	Screw adjust relief, 35-350 bar range (RV5-10)
02-200991	Normally open, bypass/relief, (SRV4-12) Fixed setting in bar (250)
02-199856	Normally open, bypass/relief, (SRV4-12) Fixed setting in bar (210)
565577	275 bar relief, (RV8-10)
02-371349	4:1 ratio pilot check on dual ports (DPC2-8)
02-173179	4:1 ratio pilot check on single port (POC1-10)
02-171965	250 bar CB on A, B ports (CBV1-10)

SiCV Coils

PART NUMBER	DESCRIPTION
300AA00089A	(SV3-10-O, SRV4-12) -12 V, no diode, dual spade
300AA00095A	(SV3-10-O, SRV4-12)- 12 V, no diode, 18" flying leads
300AA00196A	(SV3-10-O, SRV4-12) -12 V, no diode, MetriPack 150 male on 6" leads
300AA00081A	(SV3-10-O, SRV4-12) -12 V, no diode, DIN 43650 connector
710775	Mating plug with DIN 43650 connector
300AA00172A	(SV3-10-O, SRV4-12) -12 V, no diode, Weatherpack male on 6" leads
300AA00129A	(SV13-10-O) -12 V, no diode, dual spade
300AA00135A	(SV13-10-O) -12 V, no diode, 18" flying leads
300AA00121A	(SV13-10-O) -12 V, no diode, DIN 43650 connector
710775	Mating plug with DIN 43650 connector
300AA00163A	(SV13-10-O) -12 V, no diode, Weatherpack male on 6" leads

Exploded View

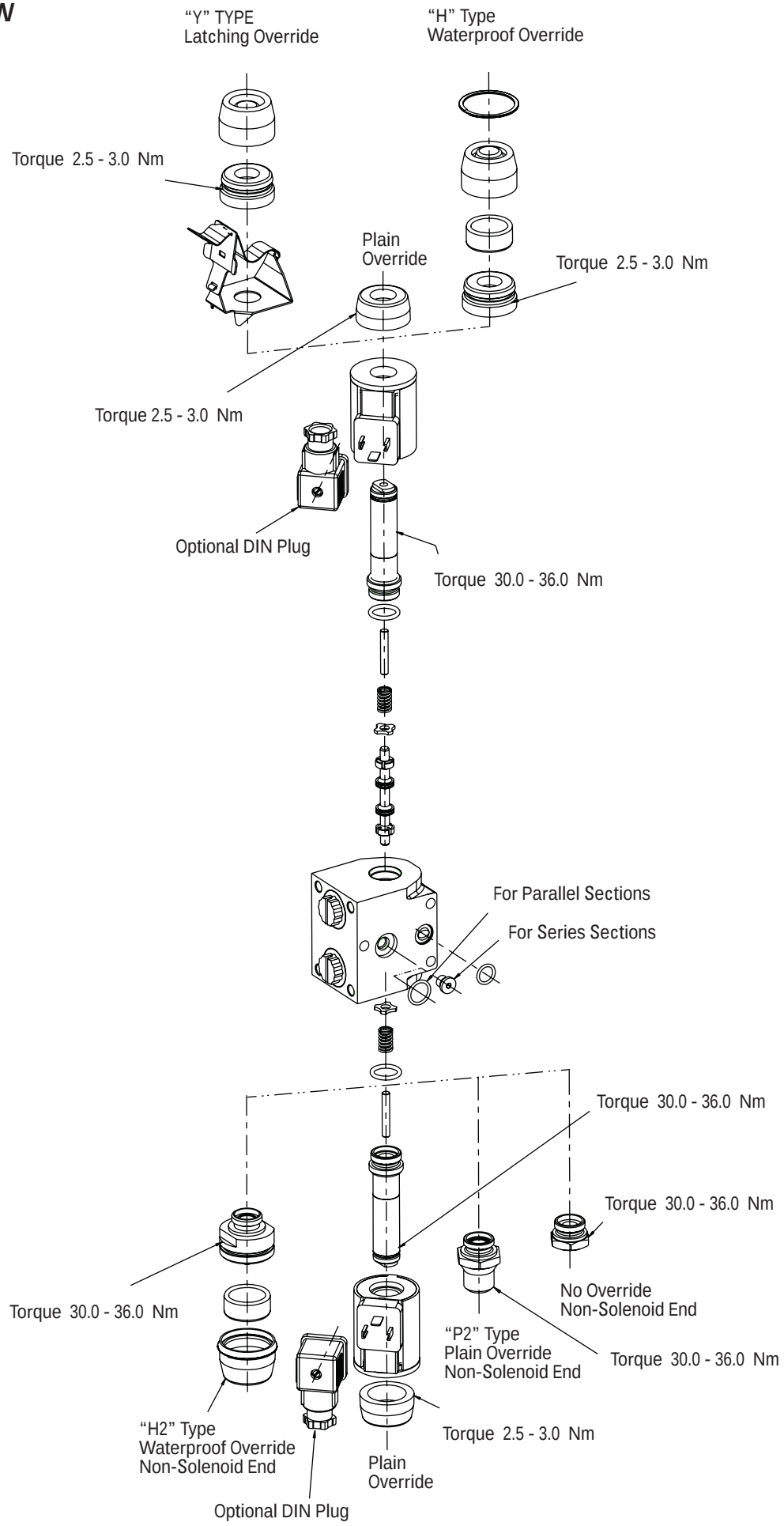

Operating Sections

PART NUMBER	DESCRIPTION
100AP10006A	Valve Section, Parallel, SAE ports, 12V Deutsch, 0C spool
100AP10007A	Valve Section, Parallel, SAE ports, 12V Deutsch, 2C spool
100AP10008A	Valve Section, Parallel, SAE ports, 12V Deutsch, 6C spool
100AP10009A	Valve Section, Parallel, SAE ports, 12V Deutsch, 8C spool
100AP10010A	Valve Section, Parallel, SAE ports, 12V DIN, 0C spool
100AP10011A	Valve Section, Parallel, SAE ports, 12V DIN, 2C spool
100AP10012A	Valve Section, Parallel, SAE ports, 12V DIN, 6C spool
100AP10013A	Valve Section, Parallel, SAE ports, 12V DIN, 8C spool
100AP10014A	Valve Section, Parallel, Option ports, 12V Deutsch, 0C spool
100AP10015A	Valve Section, Parallel, Option ports, 12V Deutsch, 2C spool
100AP10016A	Valve Section, Parallel, Option ports, 12V Deutsch, 6C spool
100AP10017A	Valve Section, Parallel, Option ports, 12V Deutsch, 8C spool

PART NUMBER	DESCRIPTION
100AP10018A	Valve Section, Parallel, Option ports, 12V DIN, 0C spool
100AP10019A	Valve Section, Parallel, Option ports, 12V DIN, 2C spool
100AP10020A	Valve Section, Parallel, Option ports, 12V DIN, 6C spool
100AP10021A	Valve Section, Parallel, Option ports, 12V DIN, 8C spool
100AP10022A	Valve Section, Series, SAE ports, 12V Deutsch, 0C spool
100AP10023A	Valve Section, Series, SAE ports, 12V Deutsch, 8C spool
100AP10024A	Valve Section, Series, SAE ports, 12V DIN, 0C spool
100AP10025A	Valve Section, Series, SAE ports, 12V DIN, 8C spool
100AP10026A	Valve Section, Series, Option ports, 12V Deutsch, 0C spool
100AP10027A	Valve Section, Series, Option ports, 12V Deutsch, 8C spool
100AP10028A	Valve Section, Series, Option ports, 12V DIN, 0C spool
100AP10029A	Valve Section, Series, Option ports, 12V DIN, 8C spool

Seal Kits

Kit No. 858995

Note: Each seal kit covers a variety of models and may have redundant seals for a particular model.

Spare Parts

COIL CONNECTION TYPE	12V W/O DIODE	24V W/O DIODE	12V WITH DIODE	24V WITH DIODE
A0 Dual Spade	02-309456	02-309457	02-309458	02-309459
D1 Deutsch DT042P	02-309468	02-309469	02-360868	–
L1 18" Flying Leads	02-309452	02-309453	02-339613	02-394209
M1 MetriPack 280 male	02-343208	–	02-343289	–
N1 MetriPack 280 female	02-343209	–	02-343290	–
P1 MetriPack 150 male	02-309464	02-309465	02-393988	–
U0 DIN 43650	02-309454	02-309455	–	02-393190
W1 Weatherpack male	02-309466	02-309467	02-337335	–

Eaton
Hydraulics Group USA
14615 Lone Oak Road
Eden Prairie, MN 55344
USA
Tel: 952-937-9800
Fax: 952-294-7722
www.eaton.com/hydraulics

Eaton
Hydraulics Group Europe
Route de la Longeraie 7
1110 Morges
Switzerland
Tel: +41 (0) 21 811 4600
Fax: +41 (0) 21 811 4601

Eaton
Hydraulics Group Asia Pacific
Eaton Building
4th Floor, No. 3 Lane 280 Linhong Rd.
Changning District
Shanghai 200335
China
Tel: (+86 21) 5200 0099
Fax: (+86 21) 5200 0400

Powering Business Worldwide

© 2011 Eaton Corporation
All Rights Reserved
Printed in USA
Document No. E-VLDI-TM001-E
August 2011