Service Data

Vickers®

Directional Controls

Multiple Unit Valves

CM11 Series, -21 Design

Fitting	Port Connection
254968	CM11**1-F*-21
254969	CM11**2-F*-21

Control Valve S/A	Relief Setting	Model
233018	500 PSI	CM11**-R05*-21
232794	750 PSI	CM11**-R07*-21
232795	1000 PSI	CM11**-R10*-21
232796	1250 PSI	CM11**-R12*-21
232797	1500 PSI	CM11**-R15*-21
232798	1750 PSI	CM11**-R17*-21
232799	2000 PSI	CM11**-R20*-21
233019	2200 PSI	CM11**-R22*-21
233020	2500 PSI	CM11**-R25*-21
266200	2750 PSI	CM11**-R27*-21
266054	3000 PSI	CM11**-R30*-21

Single Acting Sections (T,W) only		
Plug	Δ "O" Ring	Port Connections
186580	154129	CM11**1-21
181792	154130	CM11**2-21

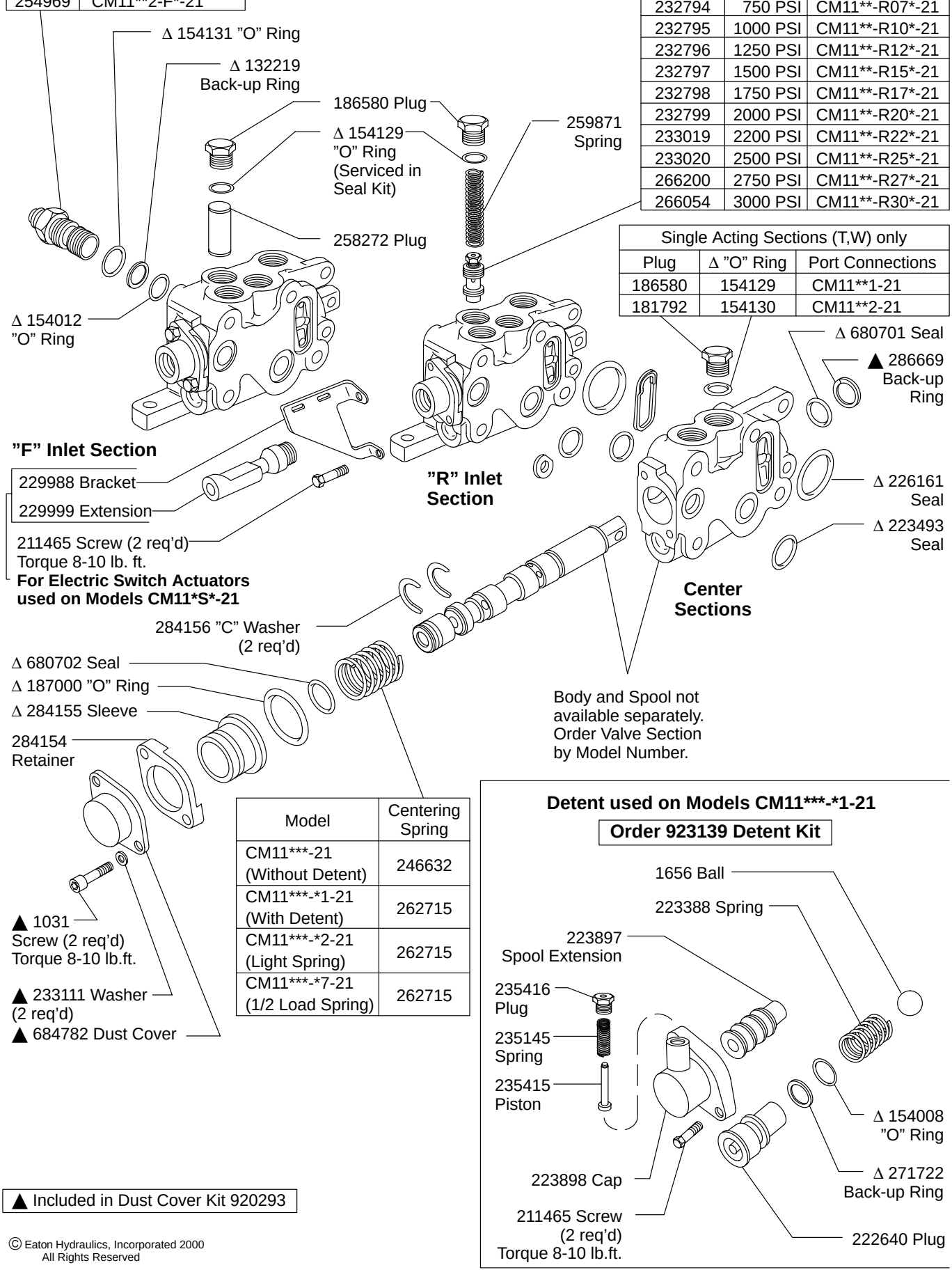

Model	Centering Spring
CM11***-21 (Without Detent)	246632
CM11***-*1-21 (With Detent)	262715
CM11***-*2-21 (Light Spring)	262715
CM11***-*7-21 (1/2 Load Spring)	262715

▲ Included in Dust Cover Kit 920293

© Eaton Hydraulics, Incorporated 2000
All Rights Reserved

Fulcrum Rod	Overall Length	Model	Operating Sections
245491	1.766”	CM11-H1-20	1
245492	3.391”	CM11-H2-20	2
245493	4.891”	CM11-H3-20	3
245494	6.391”	CM11-H4-20	4
245495	7.891”	CM11-H5-20	5
245496	9.391”	CM11-H6-20	6
245497	10.891”	CM11-H7-20	7
245498	12.391”	CM11-H8-20	8
245499	13.891”	CM11-H9-20	9
245500	15.391”	CM11-H10-20	10

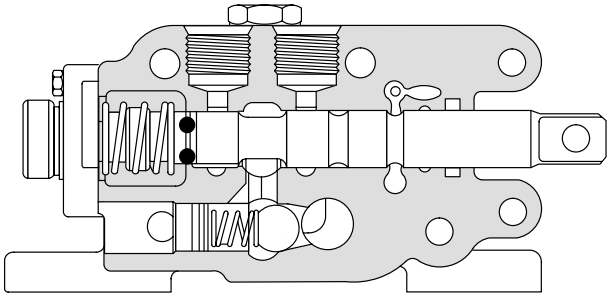

CM11NO*-RV** Option**

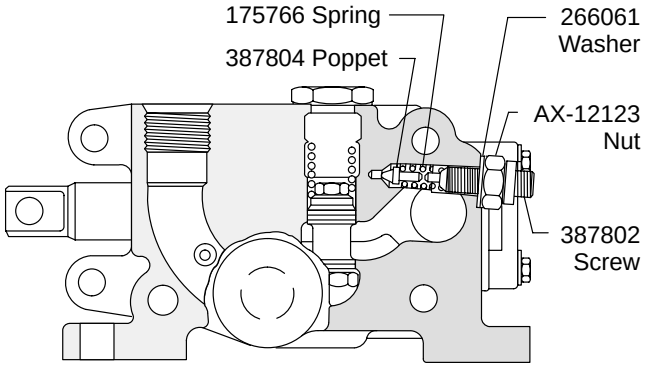

Note
Adjust 387802 screw to specified relief setting (V**) and tighten AX-12123 jam nut. (V**) value must be 250 PSI below (R**) value.

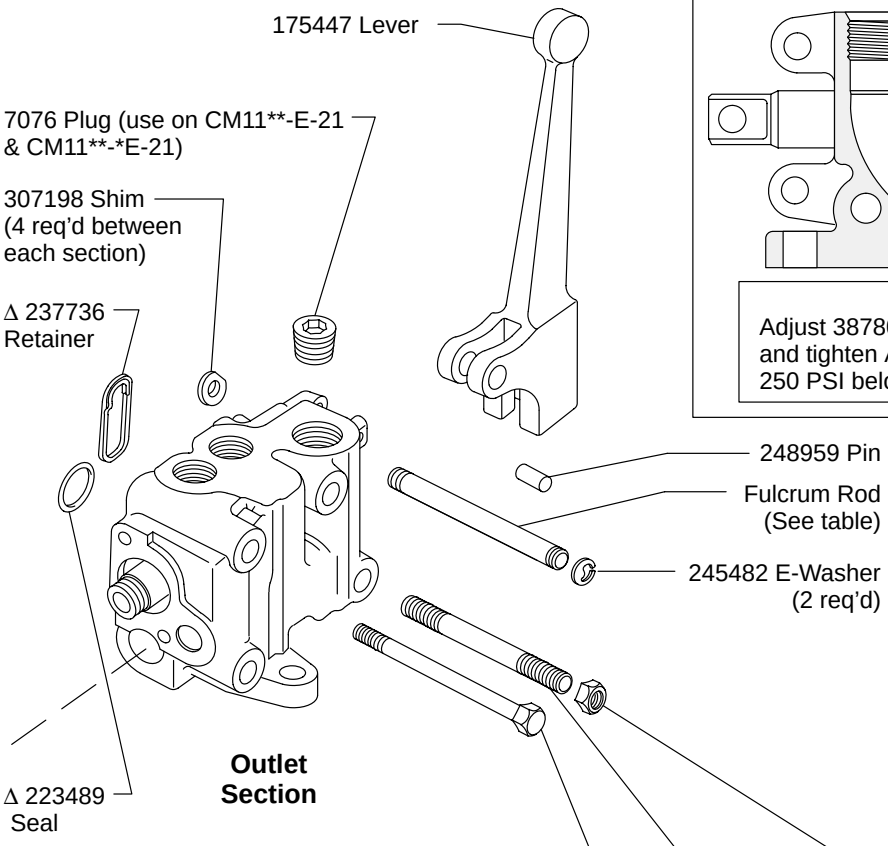

CM11*-L-21**
Order by Model Numer

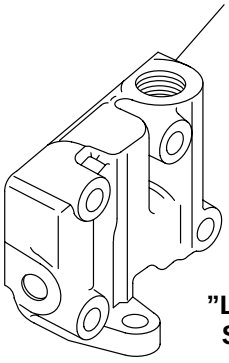

”L” Outlet Section

Screw (4 req’d)	Stud (4 req’d)	Overall Length	Nut Torque 17 lb.ft.	Model	Operating Sections
223161			1454	CM11-P1-20	1
223162			(4 req’d)	CM11-P2-20	2
	223163	7.38”		CM11-P3-20	3
	223164	8.88”		CM11-P4-20	4
	223165	10.38”		CM11-P5-20	5
	223166	11.88”	1454	CM11-P6-20	6
	223167	13.38”	(8 req’d)	CM11-P7-20	7
	223168	14.88”		CM11-P8-20	8
	223169	16.38”		CM11-P9-20	9
	223170	17.88		CM11-P10-20	10

Service all units with F3 Seal Kit 923093

▲ Included in 920278 Seal Kit

Model Code

CM11 ** * - * ** V ** * * ** - 21**

1 2 3 4 5 6 7 8 9 10

1 Model Series

CM11 - Multiple unit control valve

2 Valve Bank Modification

NO - No modification
ND - Standard sections - dust covers
NS - Standard sections - electric switch actuators
ZO - Narrow bypass sections - no modification
ZD - Narrow bypass sections - dust covers
ZS - Narrow bypass sections - electrical switch actuators

3 Port Connections

1 - 7/8-14 UNF - 2B Inlet & discharge ports - 3/4-16 UNF - 2B cylinder ports
2 - 1 1/16-14 UNF - 2B inlet & discharge ports - 7/8-14 UNF - 2B cylinder ports

4 Inlet Body Type

F - Carry over port - no relief valve
R - Standard - relief valve (partial flow bypass)
K - Standard - relief valve (full flow bypass)
J - Standard - relief valve (partial flow bypass)

5 System Relief Valve Setting (PSI)

05 - 500 PSI	20 - 2000 PSI
07 - 750 PSI	22 - 2250 PSI
10 - 1000 PSI	25 - 2500 PSI
12 - 1250 PSI	27 - 2750 PSI
15 - 1500 PSI	30 - 3000 PSI
17 - 1750	

6 Adjustable System Relief Valve Setting - PSI

(Omit if not required)

V05 - 500 PSI	V17 - 1750 PSI
V07 - 750 PSI	V20 - 2000 PSI
V10 - 1000 PSI	V22 - 2250 PSI
V12 - 1250 PSI	V25 - 2500 PSI
V15 - 1500 PSI	

7 Spool Type

A6 - Counterbalance
B - Motor
C - Float
D - Double acting
D3 - Dual function
D4 - Special metering
D5 - Combined & B spool functions
T - Single acting
W3 - Safety interlock

8 Spool Modification

(Omit if not required)

1 - Detent for any spools
2 - Light centering spring
7 - Half load centering spring

9 Outlet Body Type

L - Standard
E - Carry over port
E1 - E section with additional outlet port

10 Design

For satisfactory service life of these components in industrial applications, use full flow filtration to provide fluid which meets ISO cleanliness code 20/18/15 or cleaner. Selections from Vickers OFP, OFR, and OFRS series are recommended.

Printed in U.S.A.