Overhaul Manual

Vickers®

Directional Controls

Multiple Unit Valves

CM2 and CM3 Series -20 Design
CM2 and CM3 Series -30 Design

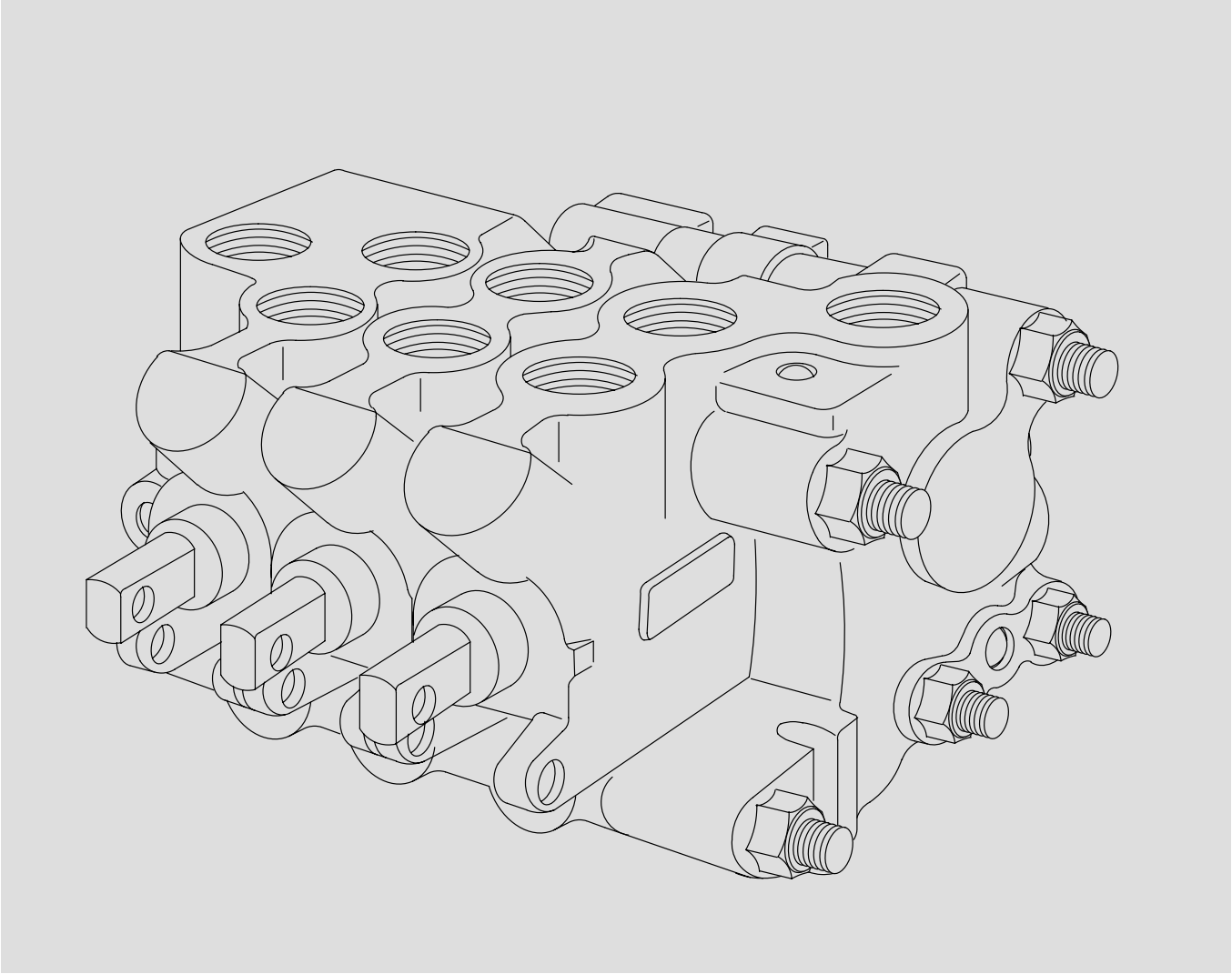

Revised 7/1/86

M-2400-S

Forward

This manual illustrates and describes the recommended procedure for servicing the CM2 and CM3 series valves.

Valves of the -30 design will be referred to throughout this manual, but this information is essentially the same for the -20 design valves. Service parts are generally interchangeable between the -20 and -30 design valves, however, it is recommended that the catalogs referenced in Table I be consulted for service parts for the respective design. Customers who wish to incorporate -30 design sections in -20 design valves can do so without concern. In this instance, a tie bolt must be left out. This does not affect the operation or function of the valve as one tie bolt on the -20 design is redundant.

To service these valves, read this manual thoroughly, and follow the instructions carefully.

Comments or suggestions concerning this publication may be direct to the Mobile Service Department of Vickers.

©Eaton Hydraulics, Incorporated 2000
All Rights Reserved

Table of Contents

Section		Page
I.	Introduction	4
	A. Purpose of Manual	4
	B. General Information	4
II.	Description	6
	A. General	6
	B. Assembly and Construction	6
	C. Detent Features	6
	D. Mounting	6
	E. Installation Drawing	6
III.	Principles of Operation	7
	A. General	7
	B. Operating Sections	7
	1. Inlet Sections	7
	2. Outlet Sections	7
	3. Spool Operation	7
	4. Flow Control and Relief Valve	9
	5. Check Valve	9
	6. Detent	9
	7. Tandem Operation	10
	C. Non-Operating Sections	10
	1. General	10
IV.	Installation	11
	A. Installation Drawings	11
	B. Mounting	11
	C. Port Connections	11
	D. Relief Valve	11
	E. Tandem Installation	11
	F. Hydraulic Tubing	11
	G Hydraulic Fluid Recommendations	11
V.	Inspection and Maintenance	13
	A. Service Tools	13
	B. Inspection	13
	C. Adding Fluid to the System	13
	D. Lubrication	13
	E. Replacement Parts	13
	F. Troubleshooting	14
VI.	Overhaul	15
	A. General	15
	B. Disassembly	15
	C. Cleaning, Inspection and Repair	15
	D. Assembly	15
VII.	Valve Options	16
	A. General	16
VIII.	Testing of Multiple Unit Valves	16

Section I – Introduction

A. Purpose Of Manual

This manual has been prepared to assist the users of Vickers CM2 and CM3 series -20/-30 Design Multiple Unit Valves in properly maintaining and repairing their units. In the sections which follow, the multiple unit valves are described in detail, their theory of operation is discussed and instructions are given for their proper installation, maintenance and overhaul.

B. General Information

1. **Related Publications** - Service parts information and installation dimensions are not contained in this manual. The parts catalogs and installation drawings listed in Table 1 are available from your local Vickers Mobile Division application engineering office, or from:

Vickers
Mobile Hydraulics Division
P.O. Box 302,Troy, Michigan 48084
Attn: Mobile Service Department

Model Series	Parts Catalogs	Installation Drawings
CM2-20	M-2401-S	M-259218
CM2-30	M-2403-S	
CM3-20	M-2402-S	M-259219
CM3-30	M-2404-S	

Table 1.

2. **Model Codes** - Variations within each basic model series are covered in the model code. Table 2 shows a complete breakdown of the model codes covering these units. Service inquiries should always include the complete model code number as stamped on the valve bodies.

Model Code

CM 2 NO 2 - K 25 B U DD 1 L - 20 - *

1 2 3 4 5 6 7 8 9 10 11 12 13

1 Directional Control
CM - Multiple unit valve, mobile

2 Series Designation
2 - 2 series
3 - 3 series

3 Valve Bank Modifications
N - Standard sections
O - No modifications

4 Port Connections CM2 Series
1 - 1.3/16-12 inlet & cyl. ports
1.5/16-12 outlet ports
2 - 1.5/16-12 inlet & cyl. ports
1.5/8-12 outlet ports
4 - 1.5/8-12 inlet & outlet ports
1.5/16-12 cyl. ports

5 Port Connections CM3 Series
1 - SAE 1” 4 bolt flange
2 - 1.5/16-12 inlet & cyl. ports
1.5/8-12 outlet ports
4 - 1.5/8-12 inlet & cyl. ports
1.7/8-12 outlet ports

6 Inlet Body Type
R - Standard relief valve
(Partial flow by-pass)
F - Tandem inlet valve
(Full flow by-pass)
K - Standard relief valve
(Full flow by-pass)

7 Relief Valve Settings
05 - 500 psi
07 - 750 psi
10 - 1000 psi
12 - 1250 psi
15 - 1500 psi
17 - 1700 psi
20 - 2000 psi
22 - 2250 psi
25 - 2500 psi

8 Spools
B - Motor spool
C - Float spool
D - Double acting
T - Single acting

9 U Section - No Spool
(For Series Operation)

10 Spool Modification
1 - Detent

11 Outlet Body
L - Standard Outlet
E - Tandem Outlet

12 Design & Modification
20 - Second design, no modification
30 - Third design, no modification

13 Special Features

Table 2. Model Code Breakdown

Section II – Description

A. General

CM2 and CM3 Series -20/-30 Design Valves are made up of directional control valve sections mounted in banks and connected internally to common pressure and tank return passages. A valve bank usually consists of an inlet and operating (R*, F*, or K*), a number of operating sections (*) and an operating and outlet section (*L or *E). Each operating section contains a sliding spool (for example B, C, D or T Spool). In valve banks where only one operating section is required, an R* section is used with an L or E tank plate section.

B. Assembly and Construction

Figure 1 is a cross-sectional view showing the construction and assembly of a three-section valve. Each section normally contains a sliding spool with centering springs and a check valve. The inlet section also contains a relief valve assembly.

Passages between the bodies connect each section to the common inlet and tank ports. Seal rings between the sections seal the connecting passages. Sections are held together by studs and nuts.

C. Detent Features

1. **Spool Detents** - A spool detent assembly consists of a special end cap with a spring loaded plunger and a spool extension. The plunger engages in grooves of the spool extension to hold the spool in the desired position (see Figure 9).

D. Mounting

CM2 and CM3 Series -20/-30 Design Valves have mounting lugs cast into the inlet and outlet sections.

E. Installation Drawing

Vickers Mobile Hydraulics Division application engineers should be consulted for valve ratings and applications. (Refer to the installation drawing listed in Table 1 for the performance information.)

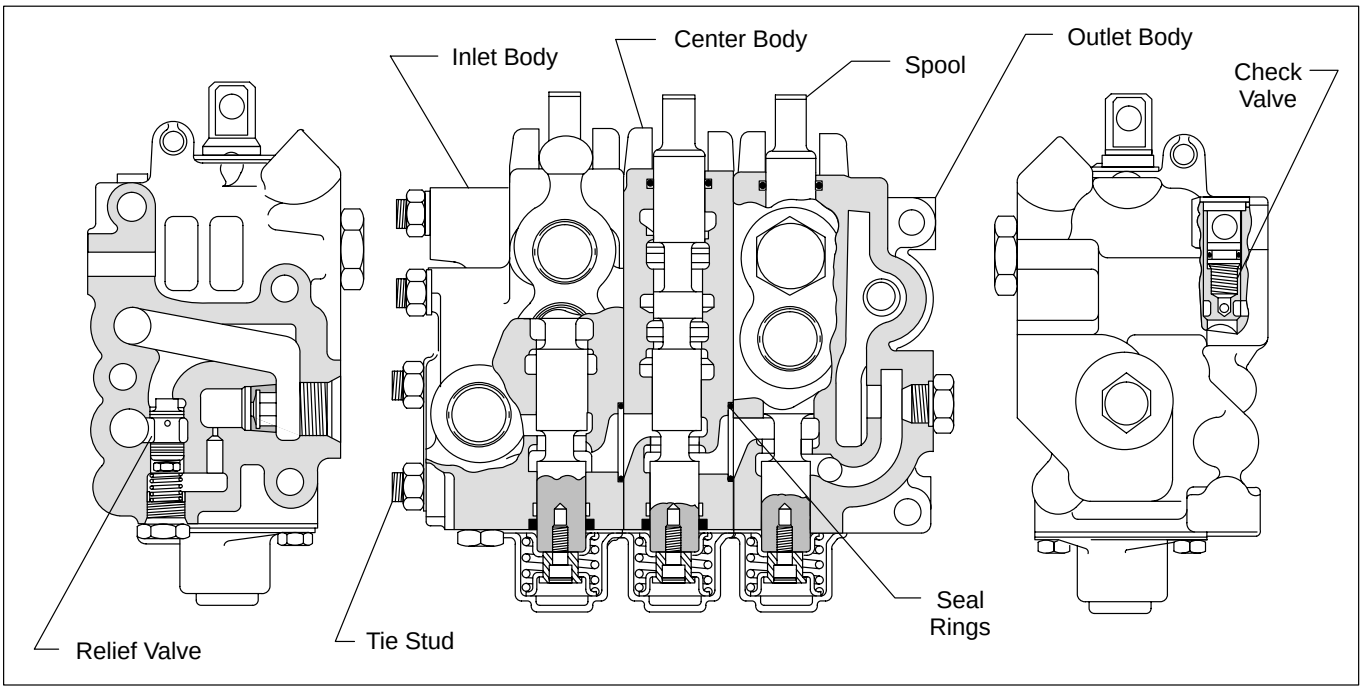

Figure 1.

Section III – Principles of Operation

A. General

Figure 2 is a schematic illustration of a four section valve, showing the cylinder ports and the by-pass pressure and tank passages. The pressure passage is used to carry fluid to the cylinder ports when the spools are shifted. The by-pass passage permits flow directly to the outlet when the spools are not being operated. The tank passages carry fluid to the tank port by return flow from the cylinder ports or fluid diverted past the flow control and relief valve.

The spools are shown in the centered or neutral position. Under these conditions, fluid in the pressure passage is blocked from the cylinder ports by the spool lands. Flow through the valve is through the by-pass and tank passage to the tank port.

B. Operating Sections

1. **Inlet Section** - The CM2 and CM3 series valve banks may be obtained with operating, R*, F*, or K*, inlet sections. These sections are available with B, C, D, or T, type spools.

These sections are individually described below.

a. **R* Section** - The R* section is equipped with an integral relief valve for overload protection. It is built to accept a check valve to prevent return flow through the valve.

The integral relief valve, with an orifice plug, also acts as a partial flow control valve. This feature lowers the pressure drop between the inlet and outlet ports. (See paragraph 4 for relief valve and flow control operation.)

The relief valve cracking pressure is pre-set at the factory. The pre-set cracking pressures range up to 2500 psi maximum. (See Table 2 Model Code for pressure settings.)

b. **F* Section** - The F* section has two pressure connections. One connection is made to the pump source and the second connection is made with a preceding valve assembly to accept the by-pass flow for tandem operation.

The F* section like the R* section is built to accept a check valve to prevent return flow when this feature is required. However, F* sections do not employ relief valve or partial flow by-pass.

c. **K* Section** - The K* section is essentially the same as the R* section except it has a full flow by-pass feature.

2. **Outlet Sections**

a. ***L Section** - When two or more spools are required in a valve bank, the last section will be an *L section. The "*" denotes the spool type. This section contains the exhaust oil port and also is built to accept a check valve to prevent back flow when this feature is required.

b. ***E Section** - This section is used for tandem operation by providing an outlet connection through which the by-pass feature for pump unloading is extended on to a subsequent valve bank. It is used in conjunction with an "F*" type inlet section in the next valve bank. Like the *L section it contains an operating spool and is built to accept a check valve to prevent back flow when this feature is required.

3. **Spool Operation**

General - Four standard spool designs are available ("B, " "C," "D," or "T,"). Any combination of spools may be used with a valve bank to perform a variety of operations. All operating spools are equipped with centering springs which return the spools to neutral.

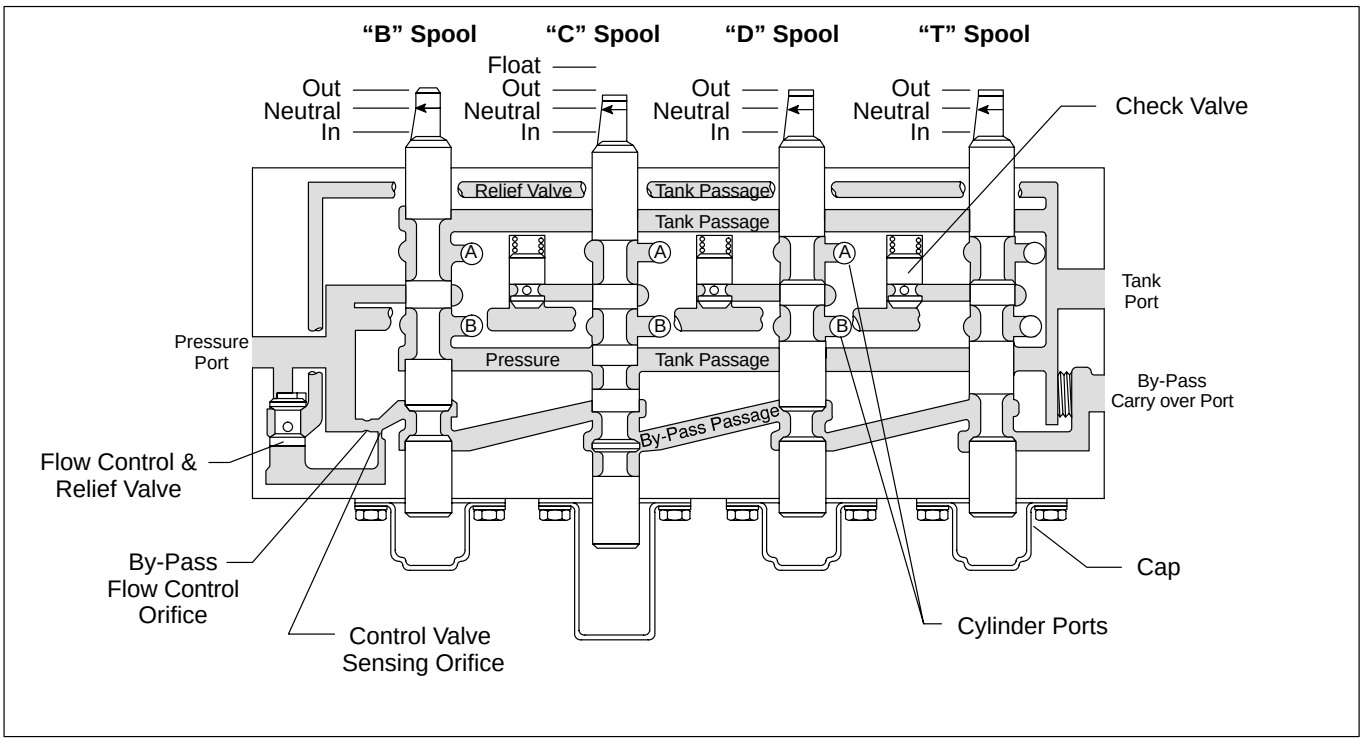

Figure 2.

For convenience A.S.A. symbols (Y32. 10-1958) are also shown with the following descriptions of each spool.

a. **"B"- Motor Spool** - "B" spools are used when flow is directed to the operation of a hydraulic motor instead of a cylinder. These spools are double acting in character so that the motor may be rotated in either direction. The cylinder ports are left partially open in the neutral position to allow free flow of oil between the motor and reservoir. See Figure 3 for spool position vs. flow characteristics.

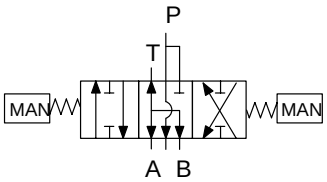

"B" Motor Spool

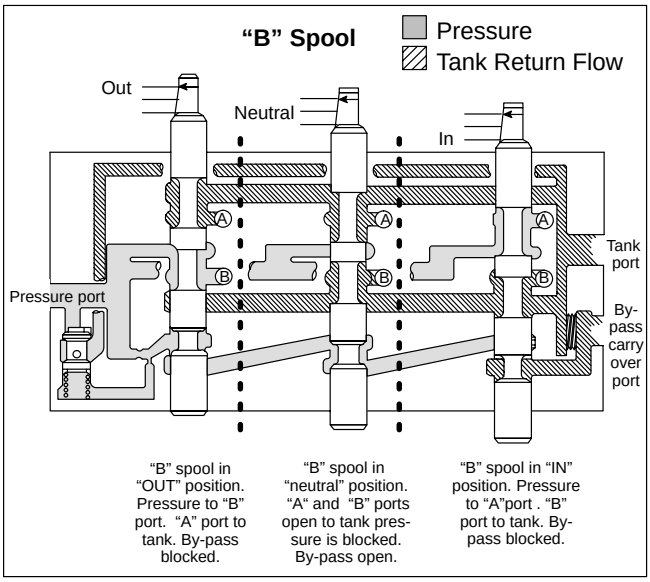

Figure 3.

b. **"C" Float Spools** - "C* spools are double acting with an additional float position. The spool is retained in the float position by a detent, and it is spring centered to neutral from the "in" and "out" positions. Both cylinder ports are open to the tank in the float position to permit free flow of oil in either direction. See Figure 4 for spool position versus flow.

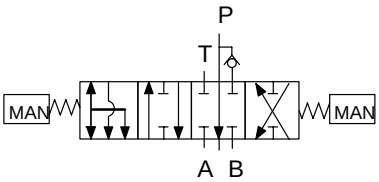

"C" Float Spool

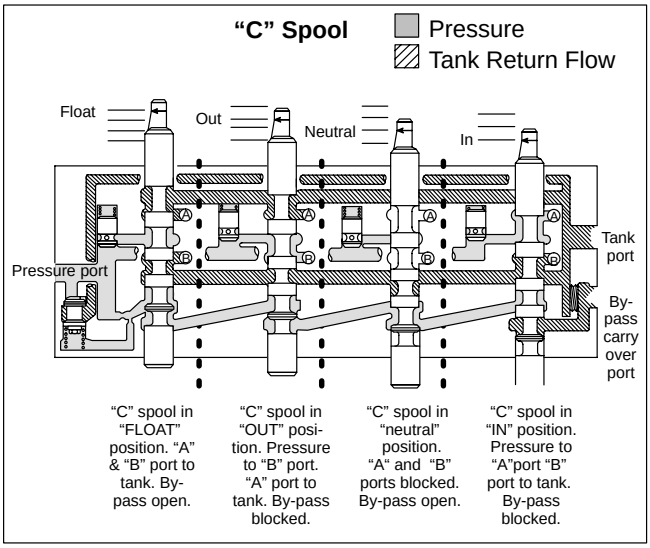

Figure 4.

c. **"D" Double Acting Spool** - "D* spools are used for applications where pump flow must be directed to either end of a cylinder, depending on the direction of movement required. The end of the cylinder not under pressure has its return flow directed to tank via internal coring of the valve sections. See Figure 5 for spool position versus flow.

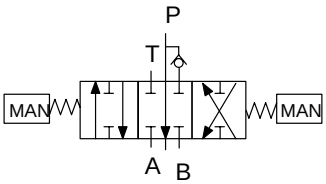

"D" Double Acting Spool

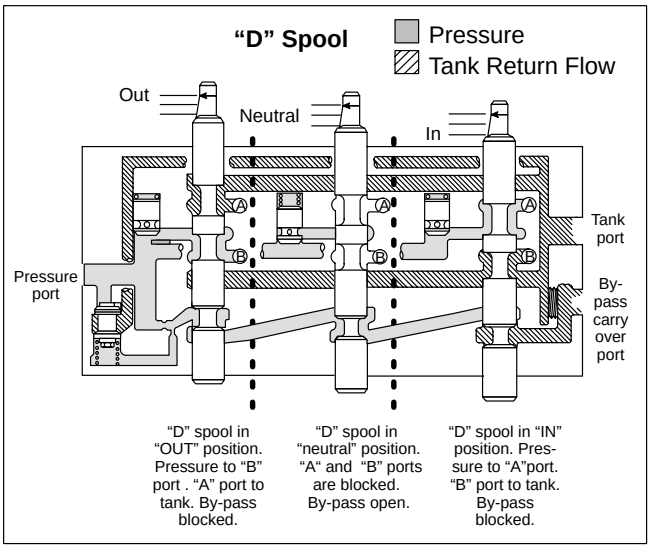

Figure 5.

c. **“T” Single Acting Spool** - “T* spools direct flow to one end of an operating cylinder only as in the example of the lift mechanism on a fork-type truck. Return flow is from the same end of operating cylinder and relies on gravity or mechanical means. See Figure 6 for spool position versus flow.

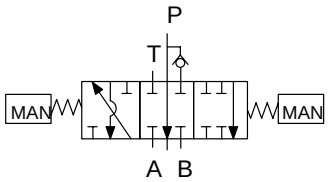

“T” Single Acting Spool

4. **Flow Control and Relief Valve**

General - The partial flow by-pass system in the CM2 and CM3 series valves makes use of a compound type flow control and relief valve arrangement. By sensing the pressure drop across an orifice at the entrance to the by-pass, the valve acts as a flow control to limit flow through the by-pass.

When a spool is completely shifted, the flow control is inoperative and full pump volume is available to the system. The control valve then functions as an overload relief valve. System pressure is limited to a prescribed maximum by the action of this valve.

a. **Flow Control** - Figure 7a shows the flow control valve operation with the spool in neutral. Flow across the by-pass orifice results in a pressure drop. The decreased pressure is sensed at the spring end of the valve sub-assembly through a sensing orifice. The slightly higher pressure at the other end of the valve permits it to shift down, diverting excess flow to the tank passage. With less than rated flow, shown on the installation drawing, there would be insufficient pressure drop across the by-pass orifice and the flow control valve would return to the closed position. Since the control valve is held closed by the large spring and all flow would be through the by-pass passage.

b. **Relief Valve** - Operation of the relief valve feature is shown in Figure 7b. Here an operating spool would be shifted, porting fluid to the system and blocking the by-pass.

Figure 7b shows operation at less than the relief valve setting. There is no flow over the by-pass orifice, so full system pressure is sensed at the spring end of the control valve, as well as the opposite end. The valve is thus hydraulically balanced and the large spring holds it closed.

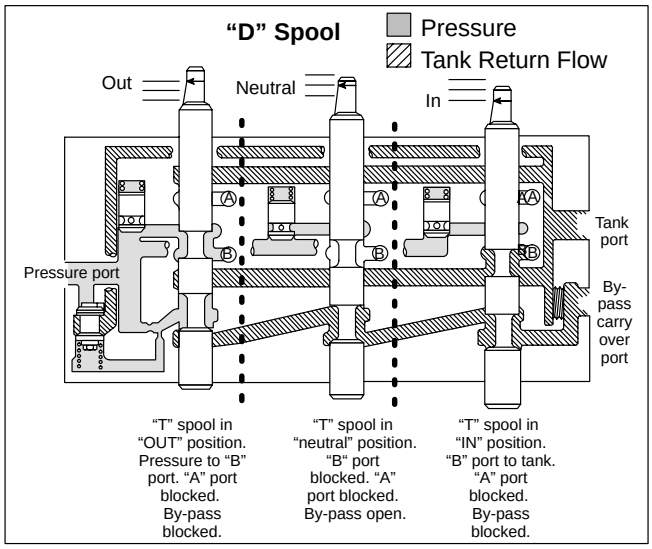

Figure 6.

Maximum pressure is determined by the setting of the small spring inside the control valve assembly. When system pressure is high enough to overcome this small spring, the poppet is forced off its seat. (See Figure 7C). Fluid immediately flows past the poppet to the tank passage. This flow created a pressure drop across the sensing orifice and the control valve is no longer hydraulically balanced. When this pressure differential is great enough to overcome the large spring, the valve shifts permitting flow to the tank passage.

5. **Check Valve** - Timing of the valve spools is such that the cylinder port opens to pressure and tank before the by-pass passage is completely blocked. To prevent return flow from passing into the pressure passage, check valves are provided in each operating section except the “B” section. The load is thus preventing from dropping.

6. **Detent** - The spool detent consists of a special end cap with a spring loaded plunger. The plunger engages in a groove in the spool extension and holds the spool in the desired position. Detent parts are illustrated in the exploded view in Figure 9a.

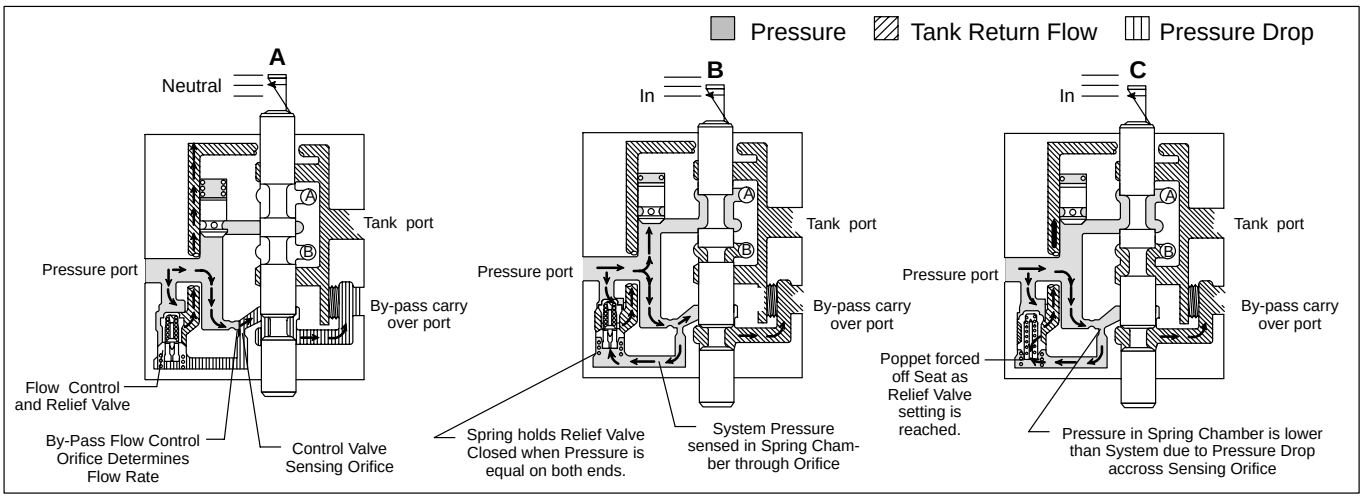

Figure 7.

7. **Tandem Operation** - Tandem operation permits operation of two banks of valves from the same pumping source. An internal plug in the outlet section of the first bank (see Figure 8) separates the by-pass passage from the tank passage. Cylinder exhaust oil is returned to tank via the alternate discharge port, and by-pass oil is directed out the primary discharge port to the by-pass port of the bank.

In Figure 8, either bank can be operated separately or both simultaneously. This is possible because of the tandem by-pass connection from the inlet connection of the first bank to the F inlet connection of the second bank. If neither bank is operating, part of the fluid flows through both by-pass passages directly to tank. The balance is diverted through the tank passage of the first section as shown in Figure 2.

In some cases, it is desirable to have tandem valves connected in series where, the second bank is dependent upon the operation of the first bank. The first bank has control priority because the tandem by-pass connection is not used. The cylinder by-pass oil of the first bank is directed out of primary discharge port to the inlet port of the second bank. Use a “K” inlet section in the first bank if full flow is desired to the second bank. Otherwise reduced flow will be encountered.

C. Non-Operating Sections

1. **General** - The CM2 valve non-operating sections are the “E” and “L” outlet sections and a center “U” section. These sections do not have operating spools. The functions of these sections are as follows:

a. **“E” Outlet Section** - The “E” type section provides an outlet section by which the by-pass feature for pump unloading is extended to a subsequent valve bank (tandem operation). It is generally used in conjunction with the “F” type inlet section on the subsequent valve bank assembly. This “E” type section is only used with one spool banks.

b. **“L“ Outlet Section** - The “L” type section is basically the same section as the “E” section except it provides only one connection for exhaust oil and is used as the last section on a single spool bank where tandem operation is not required.

c. **“U“ Center Section** - The “U” section, when mounted between two operational sections, permits the operation of two cylinders or motors in series. This is accomplished by porting the outlet of the first operating section to the inlet of the second operating section.

NOTE

It should be noted that the pressure drop across the valve, when used in series operation, will be the sum of the pressure drops for each section.

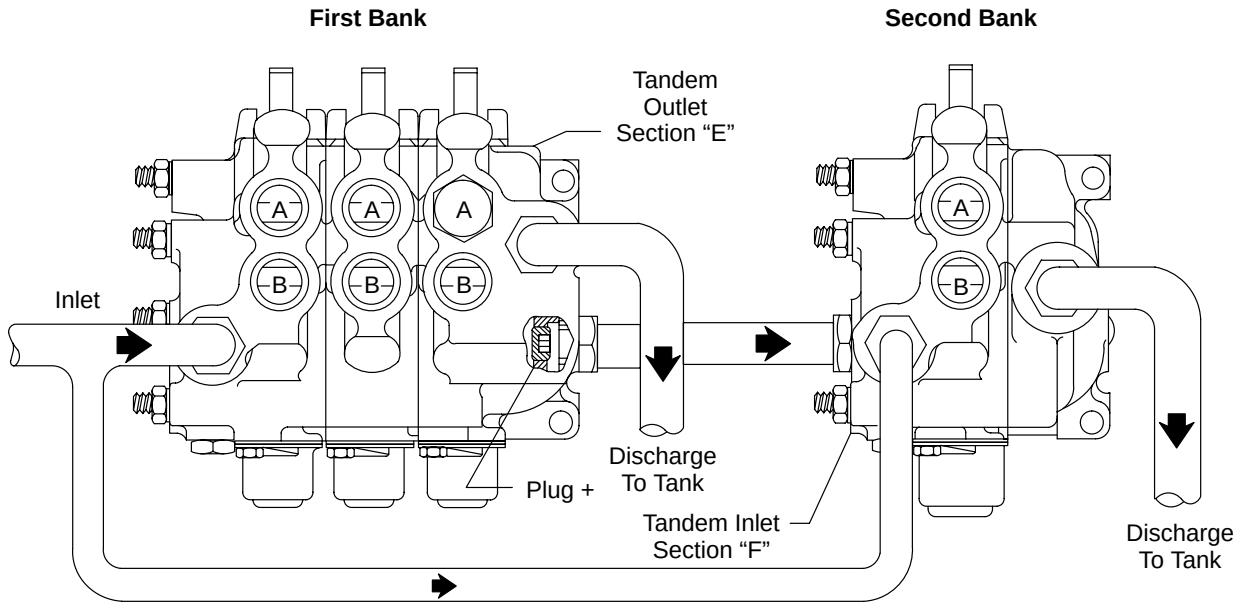

+ = Separates By-Pass and Tank Passages in “E” Section.

Figure 7.

Section IV – Installation and Operating Instructions

A. Installation Drawings

The installation drawings M-259218 and M-259219 should be consulted for installation dimensions.

B. Mounting

These valves can be mounting in any position. Enough clearance must be left to provide access to the port connections and to permit actuating the control mechanism. The valves should be securely bolted to the mounting surface.

NOTE

Valves should be mounted on a relatively flat surface to prevent possible distortion of the valve bodies.

C. Port Connections

All connections are compatible with standard SAE fittings and O-ring seals. It is only necessary to tighten fittings so that there is a firm metal-to-metal contact.

D. Relief Valve

Relief valve sub-assemblies in the inlet section are preset and tested for given pressure settings. Selection of the relief valve setting is based on the work requirements of the system. If a different relief valve setting is required, the valve sub-assembly should be replaced (see parts catalog M-2401-S, M-2402-S, M-2403-S or M-2404-S).

E. Tandem Installation

1. Piping arrangement for tandem series operation is shown in Figure 8.

2. The outlet section of the first bank must be an “E” section which is equipped with a plug (see Figure 8) to block the primary discharge port from tank. The discharge to tank port must be connected to tank.

NOTE

Slight leakage past the internal plug is permissible. The plug should not be tightened excessively, as there is the danger of distorting the body and causing the spool to bind.

F. Hydraulic Tubing

NOTE

For instructions on pickling, refer to Instruction Sheet M-9600.

1. All tubing must be thoroughly cleaned before installation to remove dirt, rust and scale. Recommended methods of cleaning are sand blasting, wire brushing and pickling.

2. The number of bends in tubing should be kept to a minimum to prevent excessive turbulence and friction of oil flow.

3. Tubing should not be bent too sharply. The minimum radius for bends is three times the inside diameter of the tube.

4. To minimize flow resistance and the possibility of leakage, only as many fittings and connections as are necessary for proper installation should be used.

G. Hydraulic Fluid Recommendations

The oil in a hydraulic system serves as the power transmission medium. It is also the system’s lubricant and coolant. Selection of the proper oil is a requirement for satisfactory system performance and life. Oil must be selected with care and with the assistance of a reputable supplier.

Two Important Factors in Selecting an Oil are:

1. **Antiwear Additives** - The oil selected must contain the necessary additives to insure high antiwear characteristics.

2. **Viscosity** - The oil selected must have proper viscosity to maintain adequate lubricating film at system operating temperature.

Suitable Types of Oil are:

1. **Crankcase Oil meeting API Service Classification MS**. The MS (most severe) classification is the key to proper selection of crankcase oils for Mobile hydraulic systems.

2. **Antiwear Type Hydraulic Oil** - There is no common designation for oils of this type. However, they are produced by all major oil suppliers and provide the antiwear qualities of MS crankcase oils.

3. **Certain Other Types of Petroleum Oils** are suitable for Mobile hydraulic service if they meet the following provisions:

a. Contain the type and content of antiwear compounding found in MS crankcase oils or have passed pump test similar to those used in developing the antiwear type hydraulic oils.

b. Meet the viscosity recommendations shown in the following table.

c. Have sufficient chemical stability for Mobile hydraulic system service.

The following types of oil are suitable if they meet the above three provisions:

Series 3 Diesel Engine Oil
Automatic Transmission Fluid Types A, F and DEXRON
Hydraulic Transmission Fluid Types C-1 and C-2

The following table summarizes oil types recommended for use with Vickers equipment in Mobile hydraulic systems by viscosity and service classification.

Hydraulic System Operating Temperature Range (Min.* to Max.)	SAE Viscosity Designation	American Petroleum Institute (API) Service Classification
0° F. to 180° F.	10W	MS
0° F. to 210° F.	10W-30**	MS
50° F. to 210° F.	20-20W	MS

Table 3.

* Ambient Start Up Temperature
** See paragraph on Viscosity Index

Operating Temperature:

The temperatures shown in Table 3 are cold start-up to maximum operating. Suitable start-up procedures must be followed to insure adequate lubrication during system warm-up.

Arctic Conditions:

Arctic conditions represent a specialized field where extensive use is made of heating equipment before starting. If necessary, this, and judicious use of SAE 5W or SAE 5W-20 oil in line with the viscosity guidelines shown in the table, may be used. Dilution of SAE 10W (MS) oil with maximum of 20% by volume of kerosene or low temperature diesel fuel is permissible. During cold start-up, avoid high speed operation of hydraulic system components until the system is warmed up to provide adequate lubrication. Operating temperature should be closely monitored to avoid exceeding a temperature of 130° F with any of these light weight or diluted oils.

Other Factors in Selecting an Oil are:

1. **Viscosity** - Viscosity is the measure of fluidity. In addition to dynamic lubricating properties, oil must have sufficient body to provide adequate sealing effect between working parts of pumps, valves, cylinders and motors, but not enough to cause pump cavitation or sluggish valve action. Optimum operating viscosity of the oil should be between 80 SSU and 180 SSU. During sustained high temperature operation viscosity should not fall below 60 SSU.

2. **Viscosity Index** - Viscosity index reflects the way viscosity changes with temperature. The smaller the viscosity change the higher the viscosity index. The viscosity index of hydraulic system oil should not be less than 90. Multiple viscosity oils, such as SAE 10W-30, incorporate additives to improve viscosity index (polymer thickened). Oils of this type generally exhibit both temporary and permanent decrease in viscosity due to the oil shear encountered in the operating hydraulic system. Accordingly, when such oils are selected, it is desirable to use those with high shear stability to insure that viscosity remains within recommended limits.

3. **Additives** - Research has developed a number of additive agents which materially improve various characteristics of oil for hydraulic systems. These additives are selected to reduce wear, increase chemical stability, inhibit corrosion and depress the pour point. The most desirable oils for hydraulic service contain higher amounts of antiwear compounding.

Special Requirements:

Where special considerations indicate a need to depart from the recommended oils or operating conditions, see your sales representative.

Cleanliness:

Thorough precautions should always be observed to insure that the hydraulic system is clean:

1. Clean (flush) entire system to remove paint, metal chips, welding shot, etc.

2. Filter each change of oil to prevent introduction of contaminant into the system.

3. Provide continuous oil filtration to remove sludge and products of wear and corrosion generated during the life of the system.

4. Provide continuous protection of system from entry of airborne contamination.

5. During usage, proper oil filling and servicing of filters, breathers, reservoirs, etc., cannot be over-emphasized.

Section V – Service and Maintenance

A. Service Tools

No special tools are required to service CM2 or CM3 series multiple unit valves.

B. Inspection

Periodic inspection of spool operation, oil condition and pressure connections saves time-consuming breakdowns and unnecessary parts replacement.

1. All hydraulic connections must be kept tight. Loose connections not only allow leakage but also permit air to be drawn into the system, resulting in noisy and/or erratic operation.

2. Spools should return to neutral automatically when the control is released. The centering spring force is approximately 60 to 120 pounds. If more force is necessary, the spool may be binding or control linkage may be faulty.

3. System filters and reservoir should be checked periodically for foreign particles. If excessive contamination is found, the system should be drained. The reservoir must be cleaned thoroughly before refilling.

C. Adding Fluid to the System

When hydraulic fluid is added to the system, it should be pumped through a 25 micron filter. If such a filter is not available, or practical to use in the field, a funnel with a fine wire screen (200 mesh or better) can be used.

It is important that oil be clean and free of all substance which will cause improper operation and excessive wear of the pump or other hydraulic units in the system. Be sure to purge all air from the system.

D. Lubrication

Internal lubrication is provided by system oil.

E. Replacement Parts

Only genuine parts manufactured or sold by Vickers should be used as replacement parts for these valves. Only Vickers knows the true quality level required of each part. These are listed in parts catalogs M-2401-S, M-2402-S, M-2403-S and M-2404-S copies of which are available on request.

F. Troubleshooting

Table 4 lists the difficulties which may be experienced with the unit and hydraulic system. It indicates the cause and remedy for each of the troubles listed. It should always be remembered that pressure and delivery are factors which are usually dependent upon each other. Adequate pressure gage equipment and a thorough understanding of the operation of the complete hydraulic system are essential to diagnose improper operation.

TROUBLE	PROBABLE CAUSE	REMEDY
Oil leads at either end of spool	Defective O-rings in valve body	Replace O-rings.
	Broken springs	Replace springs.
	Bent spool	Replace with new section of same size and type.
	Foreign particles	Clean system and valve,
	Misalignment of operating linkage	Check linkage for binding condition.
	Valve tank improperly torque	Re-torque nuts to specified ratings.
Detent type spools will not stay in detent position	Worn detent barrel	Replace detent barrel.
	Weak or broken detent spring	Replace detent spring.
No motion, slow or jerky action of hydraulic system	Relief valve not properly set, or stuck in base and/or worn	Repair, clean and readjust.
	Dirt or foreign particles lodged between relief valve control poppet and seat	Disassemble, clean and reassemble.
	Valve body cracked inside	Replace valve section.
	Spool not moved to full stoke	Check travel.
No relief valve action (High Pressure)	Small particle of dirt plugging orifice in relief valve sub-assembly	Remove relief valve and check hole. If blocked, clear hole.
	Relief valve sub-assembly installed backwards.	Install properly.
Load will not hold	Oil by-passing between spool and body	Replace valve.
	Oil by-passing piston in cylinder	Repair or replace cylinder.
	Spool not centered	Refer to above spool remedies.
Load drops when spool is moved from neutral to a power position	Dirt or foreign particles lodged between check valve poppet and seat.	Disassemble, clean and reassemble.
	Scored or sticking check valve poppet	Replace poppet.

Table 4. Troubleshooting Chart

Section VI – Overhaul

A. General

During disassembly, particular attention should be given to identification of parts for reassembly. Spools are selectively fitted to valve bodies and must be returned to the same bodies from which they were removed. Valve sections should be reassembled in the same order.

Figure 9 and 9A is an exploded view showing the proper relationship for reassembly. Reference is made to these figures in the procedures which follow.

B. Disassembly

1. **Controls** - Be sure the unit is not subjected to pressure. Disconnect and cap all lines and disconnect linkage to the spool. If hand levers are used, remove the “E” rings which retain the fulcrum rod and remove the links, levers and retaining rings.

2. **Attaching Parts** - Remove the four tie studs and nuts and separate the valve sections. Be careful not to destroy or lose spacers.

3. **End Caps** - Remove the two screws which secure the spool and cap and remove the cap. If the cap has a detent assembly, screw out the detent plug and remove the spring and piston. Remove the O-ring from the body.

4. **Operating Spool** - Slide the spool out of its bore from the cap end and remove the O-rings from the valve body around the spool bore. Do not remove the centering spring and retainers unless it is necessary to replace them.

5. **Check Valve** - Grip the stem of the check valve plug with pliers and pull it out of the valve body. Remove the spring and poppet from the valve body.

6. **Relief Valve Sub-Assy** - Screw out the plug which retains the relief valve and remove the O-ring from the plug. Remove the spring and the relief valve sub-assembly. In F* sections, remove the solid plug.

7. **Valve Body** - Remove the plug and O-ring from the blocked cylinder port on models with a single acting spool. If the alternate discharge port is plugged, it is not necessary to remove the plug unless the body is to be replaced.

C. Cleaning, Inspection and Repair

1. Discard all old seals. Wash all parts in a clean mineral oil solvent and place them on a clean surface for inspection.

2. Carefully remove burrs by light stoning or lapping. Be certain there is no paint or burrs on matting surfaces of valve bodies.

3. Inspect the valve spools and bores for burrs and scoring. If scoring is not deep enough to cause objectionable leakage, the surfaces can be stoned or polished with crocus cloth. If scoring is excessive, the valve body and spool must be replaced by ordering a new section. Check the valve spool for freedom of movement in the bore.

4. Check the relief valve for smooth movement in its bore. The valve should move from its own weight.

D. Assembly

NOTE

Coat all parts with clean hydraulic oil to facilitate reassembly and provide initial lubrication. Petroleum jelly can be used to hold seal rings in place on assembly.

1. **Valve Body** (Figure 9) - On models with single-acting spool, install the O-ring on the port plug and plug the appropriate cylinder port. Tighten the plug securely, but DO NOT over tighten.

2. **Relief Valve** - Install the O-ring on the relief valve plug. Place the relief valve assembly in its bore, hex nut end towards opening. Install the spring and plug and tighten the plug securely but DO NOT ever tighten.

3. **Check Valve** - Install a new back-up ring and O-ring on the check valve plug with the O-ring toward the spring and poppet. Place the poppet and spring in the body and install the plug.

4. **Operating Spool** - If centering spring and spool have been removed, install new O-rings in the O-ring groove in the body at each end of the spool bore. Install spool in bore from the cap end. Install the flat retainer, guide and screw. Tighten the screw securely. Align the flat retainer by shifting the spool. Spool bind is an indication of flat retainer misalignment. Install the end cap and attaching screws. Tighten the end cap screws securely. On models with detents grease all the detent parts and install the piston, springs and plug. Be sure to screw the plug in all the way.

5. **Assembly of Unit Sections.**

CAUTION

Make sure all mating surfaces of valve bodies are free of burrs and paint.

Install seal rings in the grooves in the body of each inlet and center section. Use petroleum jelly to hold the seals in place. For CM2 valves, install the spacers to insure against spool bind when the studs are tightened. With the mounting feet on a flat surface carefully place the sections together in the same order in which they were removed. The mounting feet must be maintained in a flat plane to prevent spool bind (due to body distortion) when the valve is mounted for operation. If levers are used, install pins in each spool and assembly the levers fulcrum rod and “E” rings. Tighten the nuts on the CM2 to 45-50 foot pounds torque and on the CM3 to 55-60 foot pounds torque.

Section VII – Valve Options

A. General

Operating sections can be supplied with anti-cavitation check valves, and combination anti-cavitation check valves with cylinder port relief valves. The use of these accessories will be identified by a special feature suffix on the model number. Refer to the installation drawings listed in Table 1 for these options.

1. **Anti-Cavitation Check Valve** - To eliminate cavitation created in the system, an anti-cavitation check valve may be employed. The valve can be installed on each cylinder port of any operating section where required. When the system pressure is less than tank pressure, a vacuum is created. The anti-cavitation check valve equalizes the unbalanced pressure condition by metering fluid from the tank passage back to the pressure port. The anti-cavitation check valve is located in valve operating sections next to the cylinder ports and function when the spool is in neutral and operating position.

2. **Anti-Cavitation Check with Cylinder Port Relief Valve** - The anti-cavitation check with cylinder port relief valve is a combination of anti-cavitation check valve with an integral cylinder port relief valve sub-assembly. The operation of the anti-cavitation check feature is described in paragraph VII, A, 1. The cylinder port relief sub-assembly limits the maximum pressure in the cylinder port. The relief sub-assembly normally functions when the valve spool is in the neutral position. Fluid is discharged from the cylinder port to the tank passage of the directional valve. The pressure setting is generally higher than the main system relief valve. The relief valve subassemblies are pre-set at the factory.

Section VIII – Testing

Vickers Mobile Division application engineering personnel should be consulted for recommendations on test stand circuit requirements and construction. If test equipment is available, valves should be tested at the recommended flow and pressure shown on installation drawings M-259218 and M-259219.

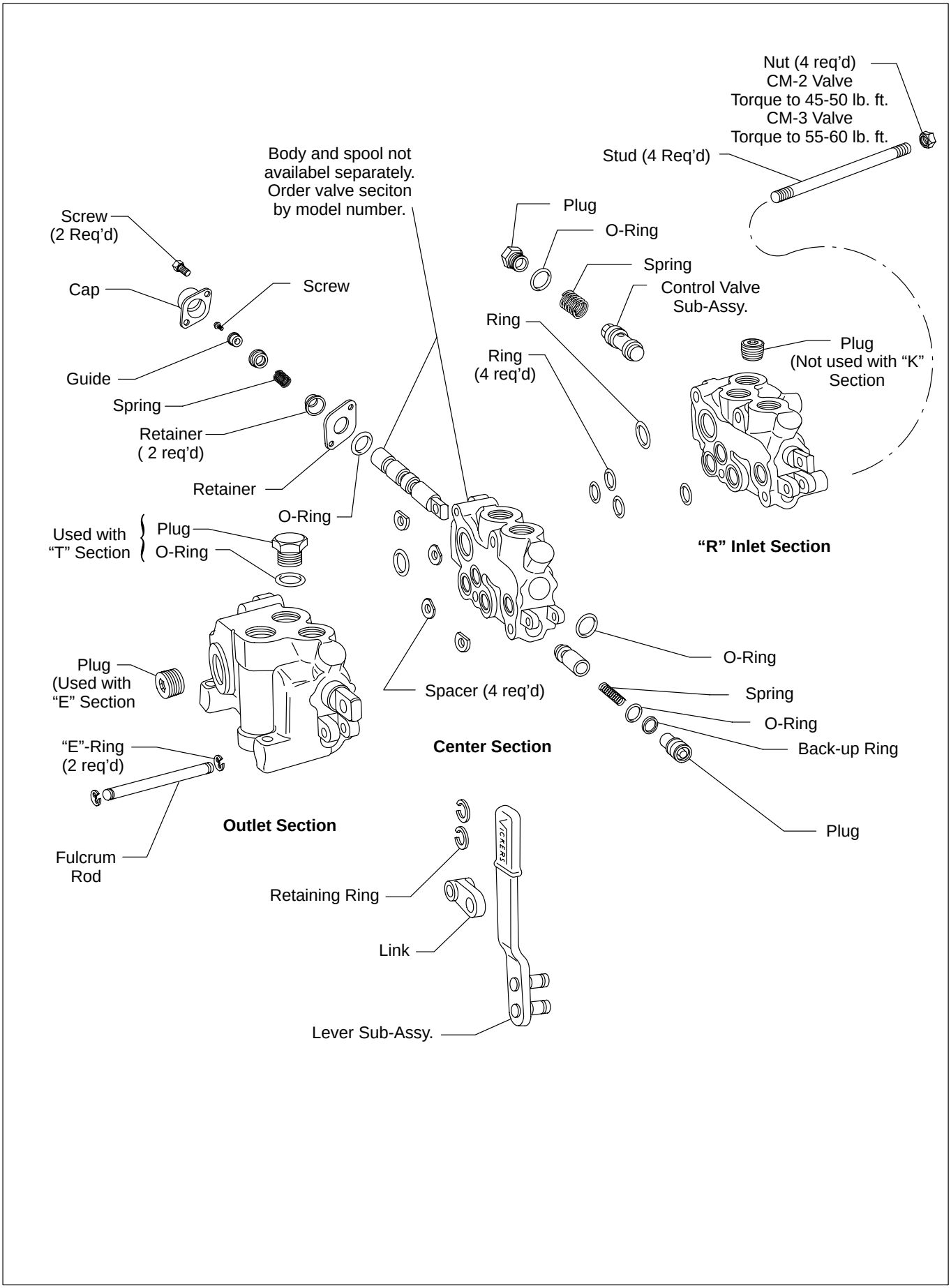
Nut (4 req'd)
CM-2 Valve
Torque to 45-50 lb. ft.
CM-3 Valve
Torque to 55-60 lb. ft.
Stud (4 Req'd)
Body and spool not
availabel separately.
Order valve seciton
by model number.
Screw
(2 Req'd)
Plug
O-Ring
Spring
Control Valve
Sub-Assy.
Cap
Screw
Ring
Ring
(4 req'd)
Plug
(Not used with "K"
Section
Guide
Spring
Retainer
(2 req'd)
Retainer
O-Ring
Used with
"T" Section
Plug
O-Ring
"R" Inlet Section
Plug
(Used with
"E" Section
Spacer (4 req'd)
O-Ring
Spring
O-Ring
Back-up Ring
"E"-Ring
(2 req'd)
Center Section
Plug
Outlet Section
Fulcrum
Rod
Retaining Ring
Link
Lever Sub-Assy.

Figure 9.

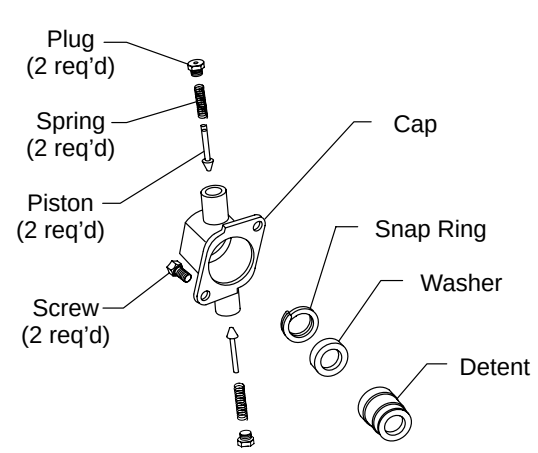

Detent used on "C" Float Section

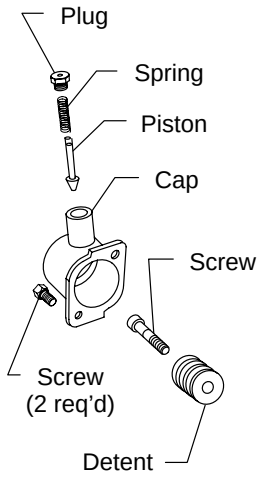

Detent used on "I" Section

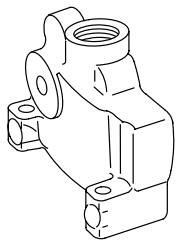

"L" Section

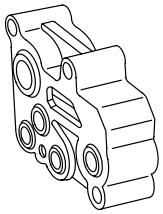

"U" Section

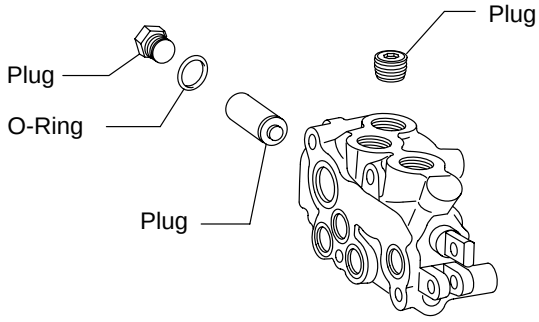

"F" Inlet Section

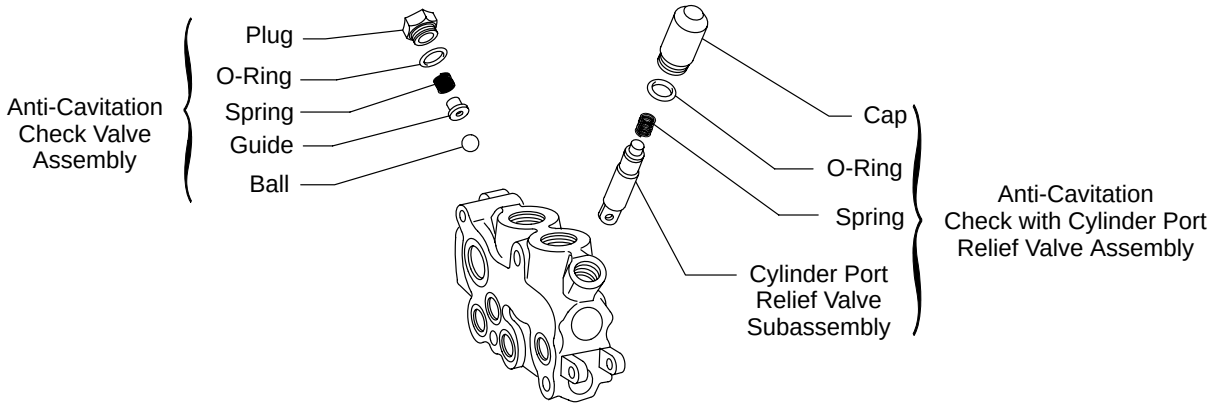

Figure 9a.

Eaton Hydraulics
15151 Highway 5
Eden Prairie, MN 55344
Telephone: 612 937-7254
Fax: 612 937-7130
www.eatonhydraulics.com

46 New Lane, Havant
Hampshire PO9 2NB
England
Telephone: (44) 170-548-6451
Fax: (44) 170-548-7110