Vickers®

Service Data

Directional Controls

Multiple Unit Valves

CM3 Series -30 Design

C Spool Float Detent

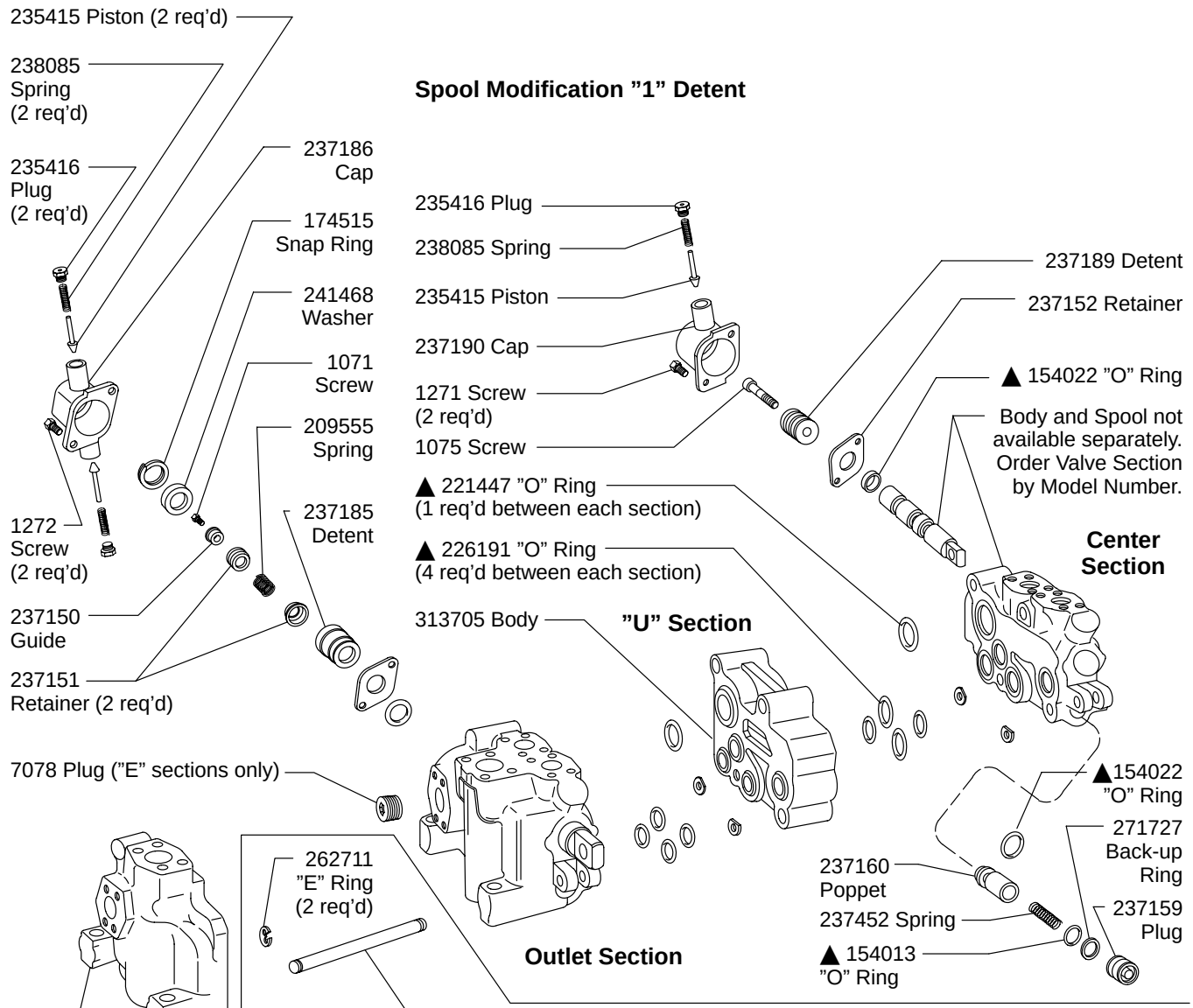

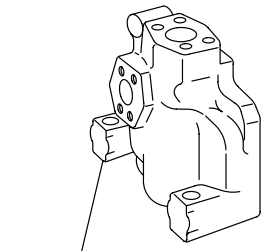

"L" Section

Body	Model Designation
313703	CM3NO1-L-30
313733	CM3NO4-L-30
313883	CM3NO2-L-30

Fulcrum Rod	Length (Inches)	Operating Sections	Lever Kit Model
262721	2.781	1	CM3-H 1-30
263102	5.068	2	CM3-H 2-30
263103	7.568	3	CM3-H 3-30
263104	10.068	4	CM3-H 4-30
263105	12.568	5	CM3-H 5-30
263106	15.068	6	CM3-H 6-30
263107	17.568	7	CM3-H 7-30
263108	20.068	8	CM3-H 8-30
263109	22.568	9	CM3-H 9-30
263110	25.068	10	CM3-H10-30

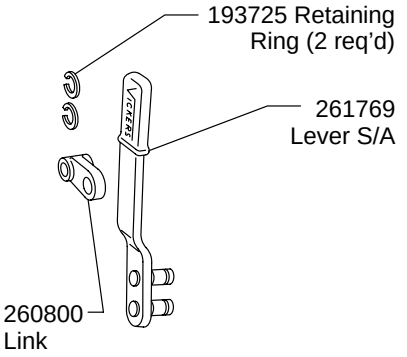

© Eaton Hydraulics, Incorporated 2000
All Rights Reserved

Control Valve S/A	Relief Setting (PSI)	Model Designation
233015	500	CM3NO*-*05*-30
232836	750	CM3NO*-*07*-30
232837	1000	CM3NO*-*10*-30
233027	1250	CM3NO*-*12*-30
232838	1500	CM3NO*-*15*-30
232839	1750	CM3NO*-*17*-30
232840	2000	CM3NO*-*20*-30
233016	2250	CM3NO*-*22*-30
233017	2500	CM3NO*-*25*-30

*Stud Kit Model	Operating Sections	*Stud (4 req'd)	Length (Inches)
CM3-P 1-30	1	280784	5.75
CM3-P 2-30	2	237172	6.25
CM3-P 3-30	3	237173	8.75
CM3-P 4-30	4	237174	11.25
CM3-P 5-30	5	237175	13.75
CM3-P 6-30	6	237176	16.25
CM3-P 7-30	7	237177	18.75
CM3-P 8-30	8	237178	21.25
CM3-P 9-30	9	237179	23.75
CM3-P10-30	10	237180	26.25

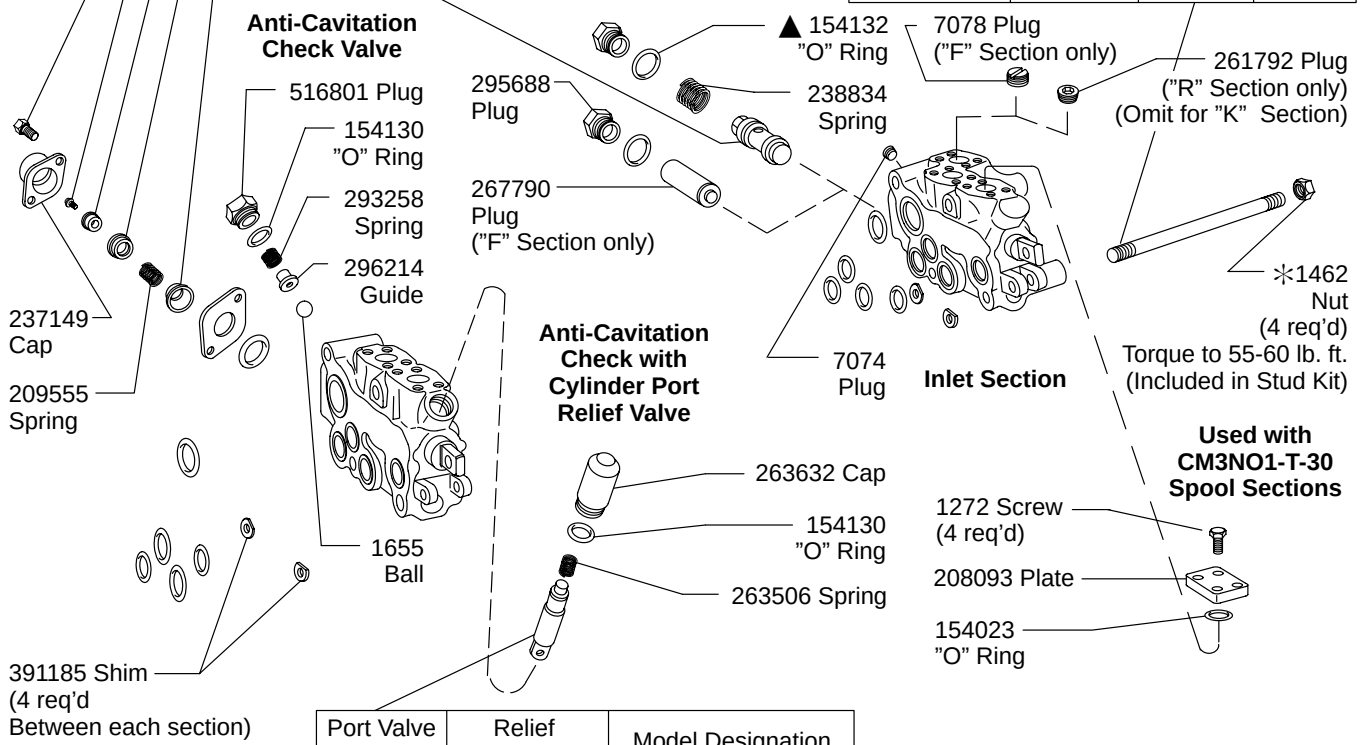

Port Valve S/A	Relief Setting (PSI)	Model Designation
263601	750	CM3NO*-*-30-*-07
263602	1000	CM3NO*-*-30-*-10
263603	1250	CM3NO*-*-30-*-12
263604	1500	CM3NO*-*-30-*-15
263605	1750	CM3NO*-*-30-*-17
263606	2000	CM3NO*-*-30-*-20
263607	2250	CM3NO*-*-30-*-22
263608	2500	CM3NO*-*-30-*-25
294688	2750	CM3NO*-*-30-*-27
263610	3000	CM3NO*-*-30-*-30
263611	3250	CM3NO*-*-30-*-32
263612	3500	CM3NO*-*-30-*-35

✳Thread Studs fully into Oulet Section first, then complete assembly of Valve.

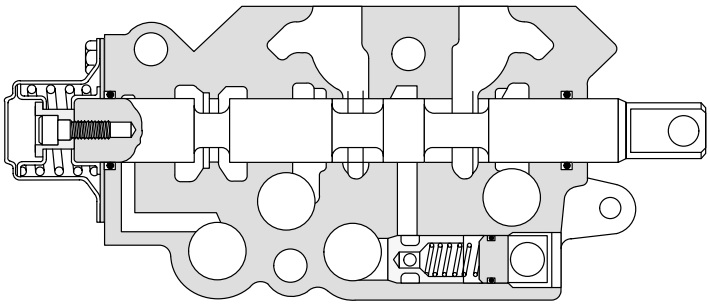

▲ Service all units with F3 Seal Kit 922927

Model Code

CM3 N0 1 - * ** ** 1 * - 30 - A**B** - * - *(**) - N - B22**

1 2 3 4 5 6 7 8 9 10 11 12 13 14

1 Model Series

CM3 - Multiple unit control valve, mobile

2 Valve Bank Modification

NO - No modification

3 Port Connections

1 - SAE 1 inch 4-bolt flange inlet & cylinders, SAE 1 1/4 4-bolt flange discharge

4 Inlet Body Type

F - Carry over port - no relief valve
K - Standard - relief (full flow bypass)
R - Standard - relief valve (partial flow bypass)

5 System Relief Valve Setting (PSI)

05 - 500	12 - 1250	20 - 2000
07 - 750	15 - 1500	22 - 2250
10 - 1000	17 - 1750	25 - 2500

6 Spool Type

B - Motor
C - Float
D - Double acting
T - Single acting
U - Series section (no spool)

7 Spool Modification
(Omit if not required)

1 - Detent for B, D, or T spools

8 Outlet Body Type

L - Standard
E - Carry over port

9 Design Number

30 - 3rd Design

10 1st Spool

A** - Check and port relief on end "A"
B** - Check and port relief on end "B"

Port relief setting - PSI

07 - 750	17 - 1750	27 - 2750
10 - 1000	20 - 2000	30 - 3000
12 - 1250	22 - 2250	32 - 3250
15 - 1500	25 - 2500	35 - 3500

11 2nd Spool

A - Check only on end "A"
B - Check only on end "B"

12 3rd Spool

A22 - Check and port relief set at 2250 PSI on end "A"
B - Check only on end "B"

13 4th Spool

N - No check or relief valve in port "A" or "B"

14 5th Spool

B22 - Check and port relief set at 2250 PSI in "B" port only. Nothing in port "A".

For satisfactory service life of these components in industrial applications, use full flow filtration to provide fluid which meets ISO cleanliness code 20/18/15 or cleaner. Selections from Eaton OFP, OFR, and OFRS series are recommended.

Printed in U.S.A.