Eaton®

Selector Valves

June 1996

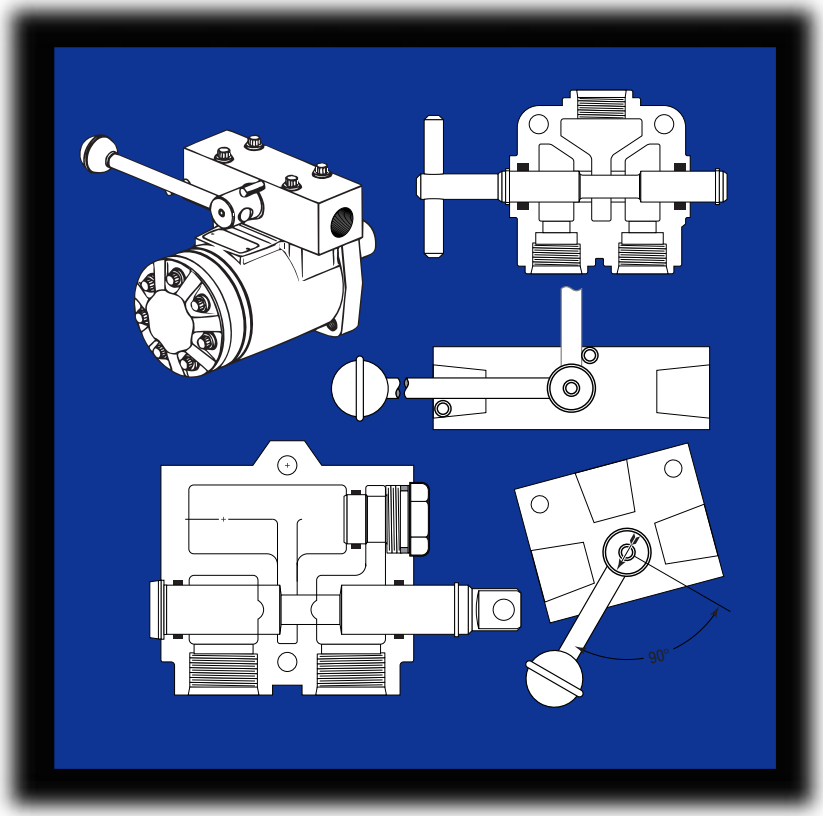

Manually Operated Selector Valves

Hydraulics

We Manufacture

Solutions

Model 15676 30 GPM Selector Valve

With Optional Inlet Relief Valve

Dimensions

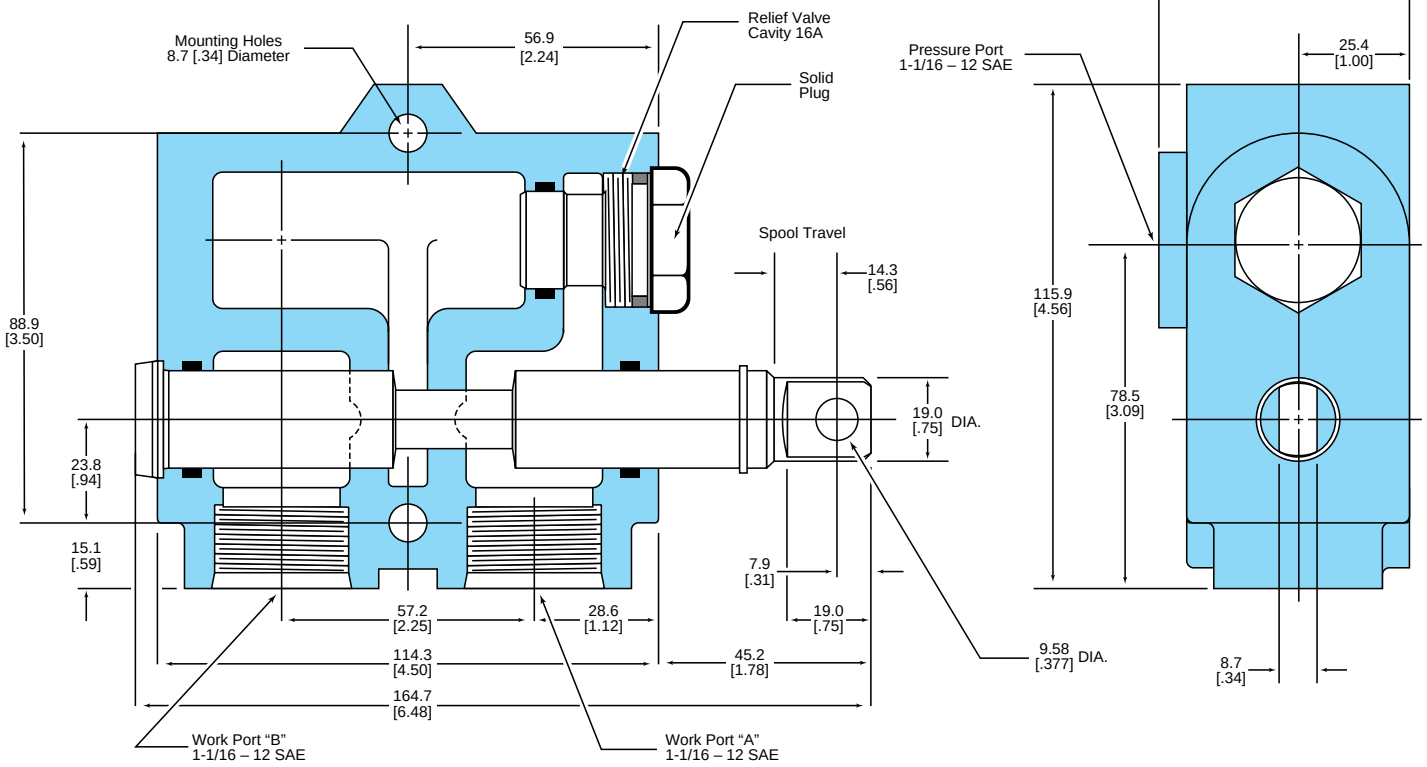

Schematic

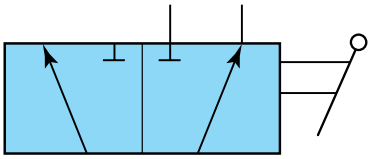

Specifications

Rated Input Flow	113.6 L/min. [30 GPM]
Rated Pressure	172.4 bar [2500 PSI]
Weight	3.2 kg. [7.0 lbs.]
Paint	Primer

Note: When a relief valve is installed in relief valve cavity 16A port "A" must be connected to tank, port "B" is then used as a pressure port to control valve or motor.

Ordering Information

Order No. 15676-DAA

Model 39004 20 GPM Selector Valve

Dimensions

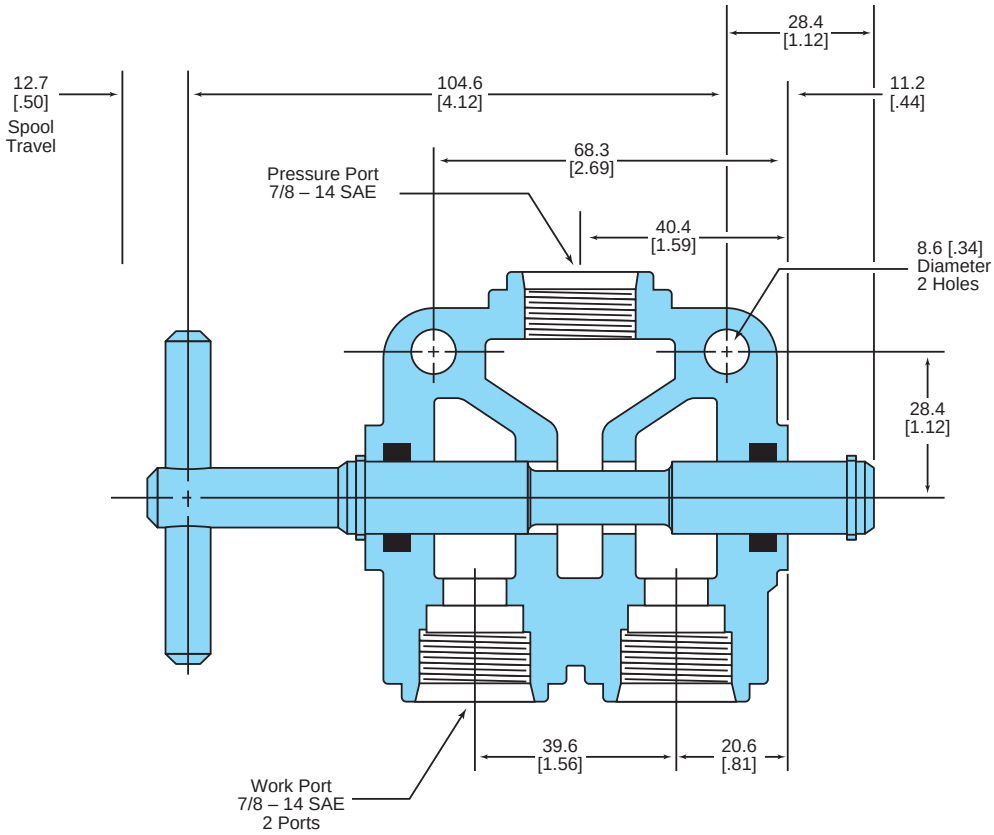

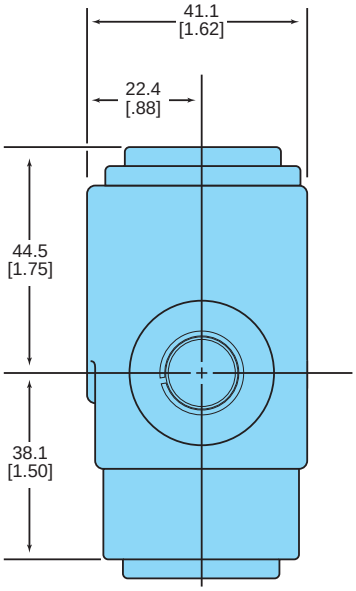

Schematic

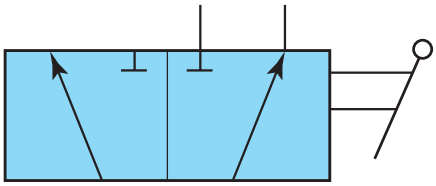

Specifications

Rated Input Flow	75.7 L/min. [20 GPM]
Rated Pressure	172.4 bar [2500 PSI]
Weight	1.5 kg. [3.25 lbs.]
Paint	Primer

Ordering Information

Order No. 39004-ABC

Rotary Selector Valves–3 or 4 Way

Two position, two or three way plug-type selector valves are used to turn motor circuits on and off, for auger and conveyor controls, and for fishing gurdys. Normal operating pressure is 104 bar [1500 PSI] due to forces required to operate the lever, but valves may be used in any set position to 207 bar [3000 PSI]. They are available with in-line mounting or for manifold mounting on Char-Lynn® H and S Series motors.

20 GPM 3 Way In Line Selector

No Relief, Nominal Pressure Rating 207 bar [3000 PSI]

Flow	Product Number	Mounting	Port Size	Shipping Weight
76 l/min 20 GPM	601-1015		1/2 NPTF	3.3 kg 1.5 lbs

Dimensions

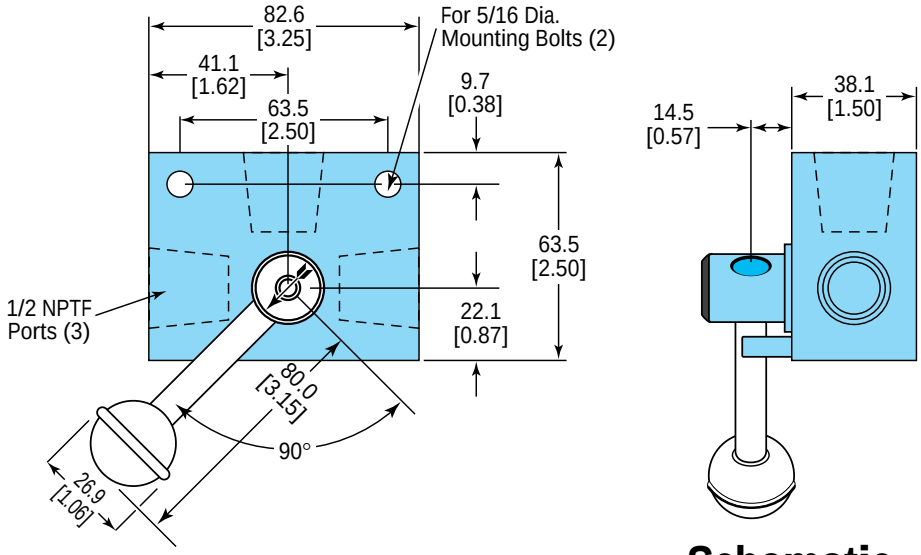

Schematic

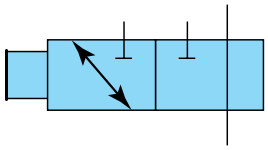

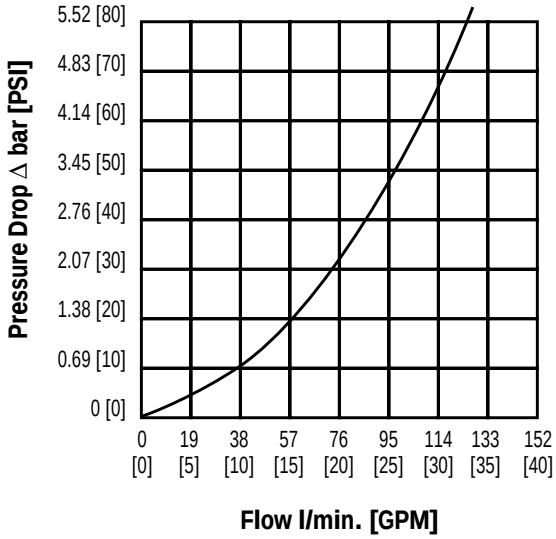

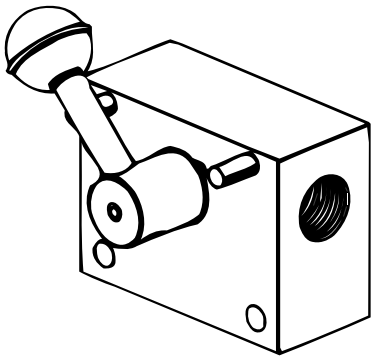

601-1015

20 GPM 4 Way Port Mounted Selector

No Relief, Nominal Pressure Rating 207 bar [3000 PSI]

Flow	Product Number	Mounting	Port Size	Shipping Weight
76 l/min 20 GPM	601-1126	Char-Lynn H&S Series Motor Port Mounting	7/8–14 O-ring	3.3 kg 1.5 lbs

Dimensions

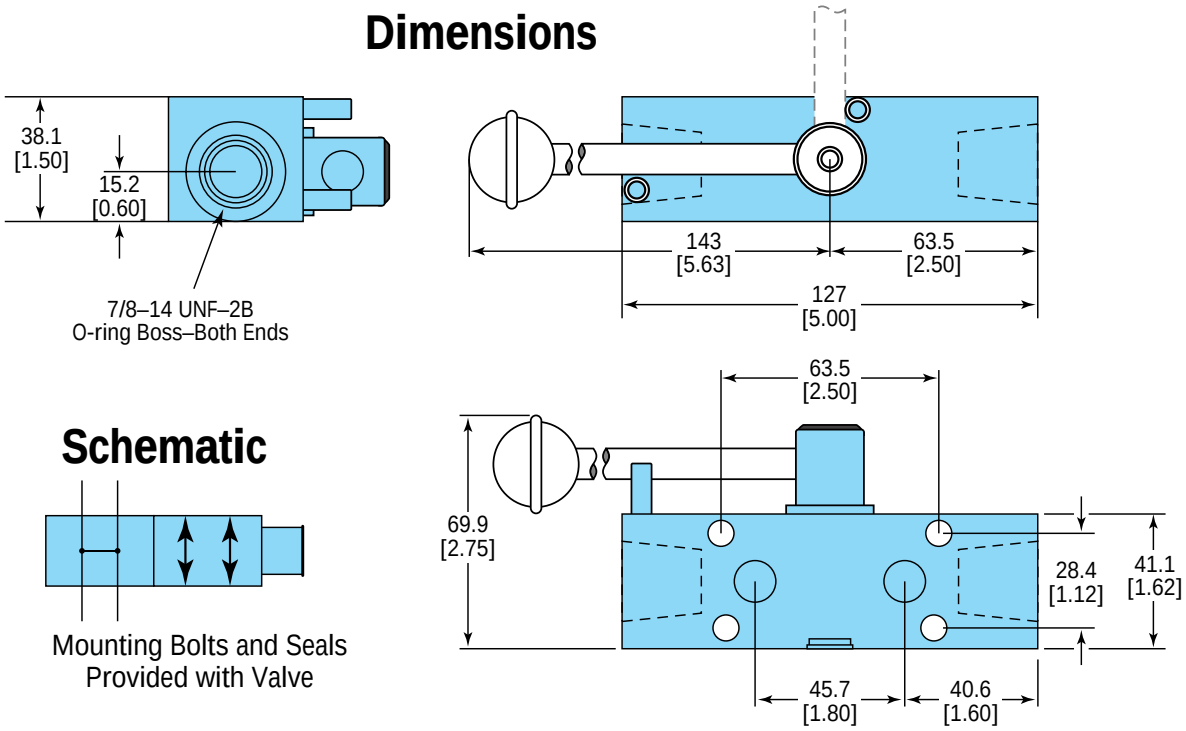

Schematic

Mounting Bolts and Seals
Provided with Valve

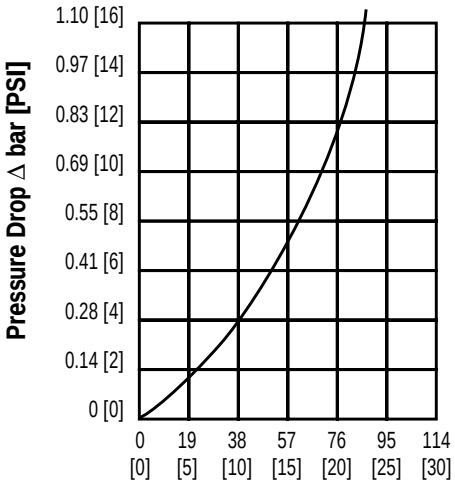

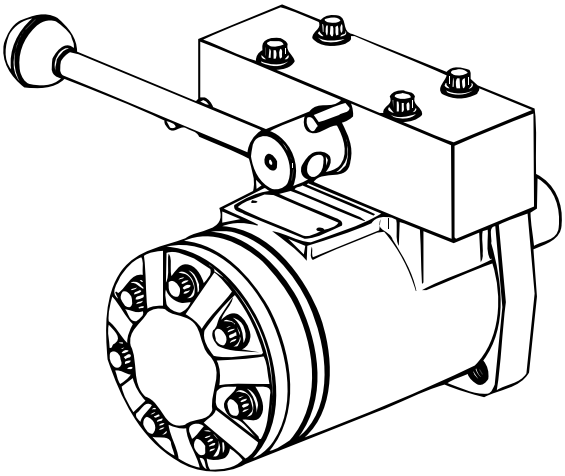

601-1126 (Mounted on Motor)

Notes

Notes

Eaton
Fluid Power Group
Hydraulics Business USA
14615 Lone Oak Road
Eden Prairie, MN 55344
USA
Tel: 952-937-9800
Fax: 952-294-7722
www.eaton.com/hydraulics

Eaton
Fluid Power Group
Hydraulics Business Europe
Route de la Longeraie 7
1110 Morges
Switzerland
Tel: +41 (0) 21 811 4600
Fax: +41 (0) 21 811 4601

Eaton
Fluid Power Group
Hydraulics Business Asia Pacific
11th Floor Hong Kong New World Tower
300 Huaihai Zhong Road
Shanghai 200021
China
Tel: 86-21-6387-9988
Fax: 86-21-6335-3912

Powering Business Worldwide

© 2008 Eaton Corporation
All Rights Reserved
Printed in USA
Document No. E-VLMB-MC002-E
Supersedes 11-509
November 2008