Eaton®

Pressure Modulating Control Valve

April, 1998

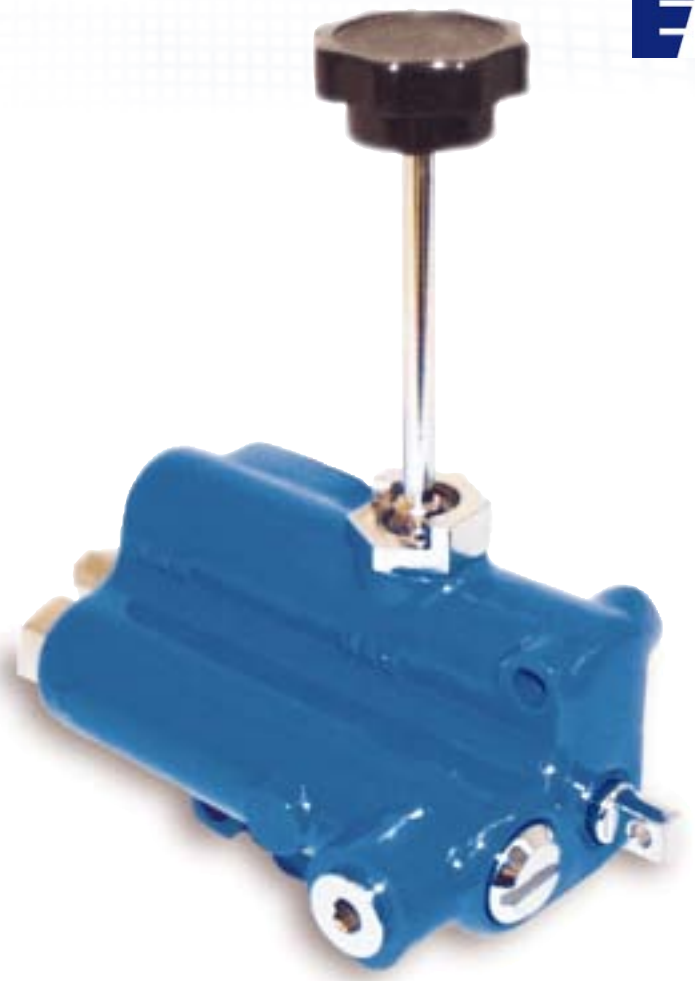

Model 31931, 7 GPM Pressure Modulating Control Valve

Hydraulics

We Manufacture Solutions

Features and Specifications

Eaton® 7 GPM Pressure Modulating Control Valve Model 31931-CBZ

Applications

- **Front Mounted Rotary Deck Mowers**
- **Front Mounted Reel Mowers**

Similar to other single spool control valves, this valve allows the operator to smoothly position (raise and lower) the mower deck or reels with precision. In addition, lift circuit back pressure can be modulated by operating a rotary needle cartridge which allows the operator to take weight off the cutting units for reduced ground pressure and increased tractive effort or to apply down pressure to the cutting units for improved cutting finish.

Standard Features

- Cast Iron Bodies
- Cored Internal Passages
- 3/4" -16 SAE Inlet and Return Ports
- 9/16" -18 SAE Work Ports
- Detent – Float
- Modulating Valve – Cartridge Needle Type

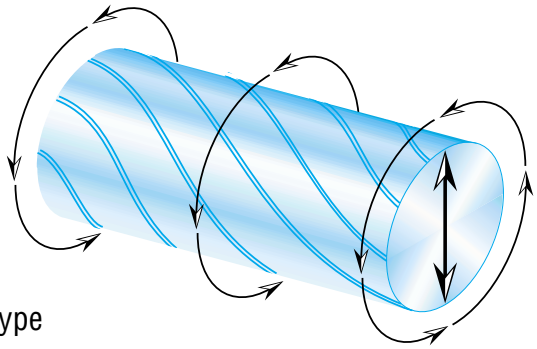

Specifications

- Inlet Flow Rate ---------- 26.5 L/min [7 GPM]
- Pressure Rating ---------- 172 bar [2500 PSI]
- Maximum System Temperature ---------- 107° C [225° F]

Dimensions

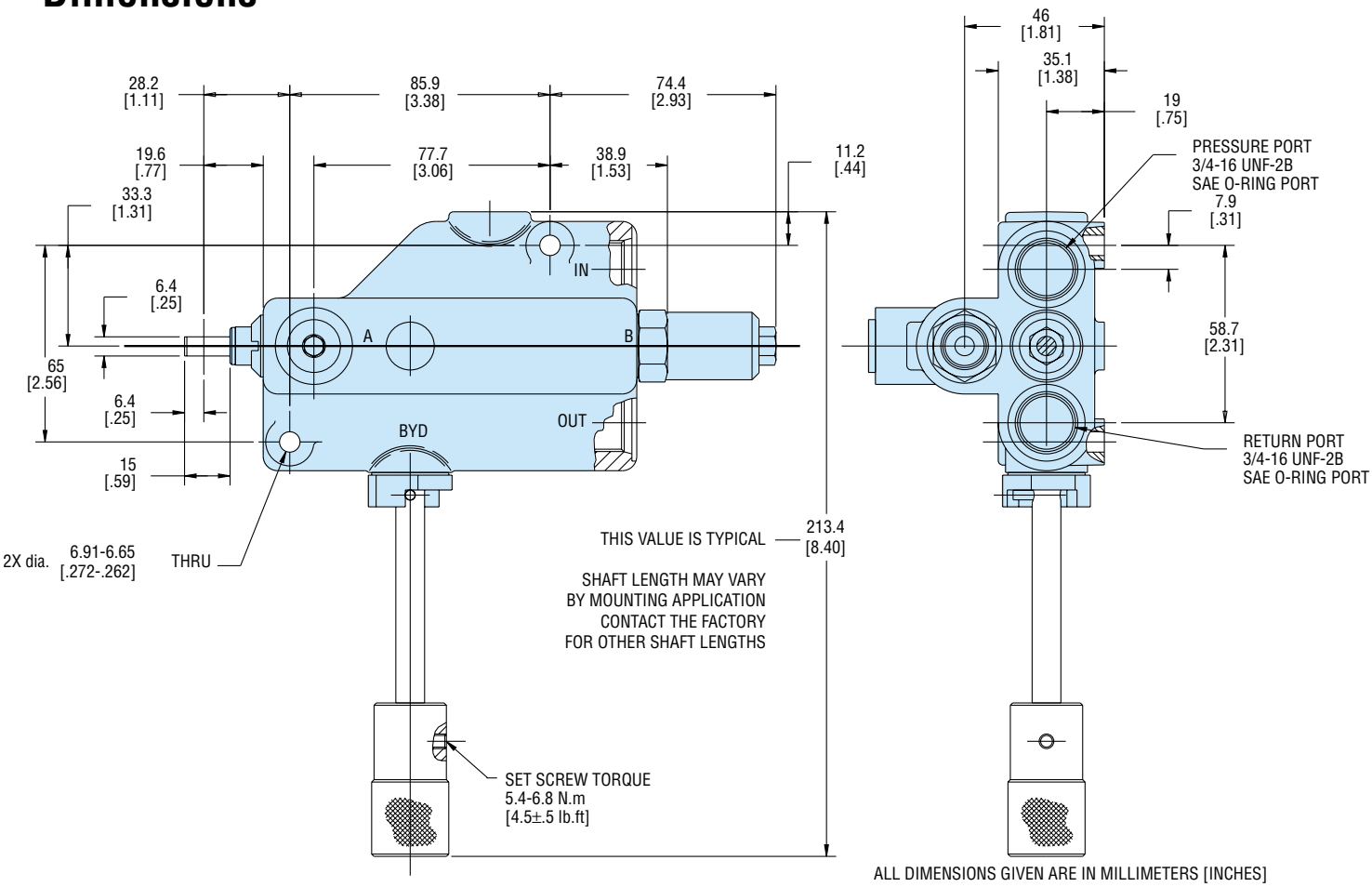

Schematics

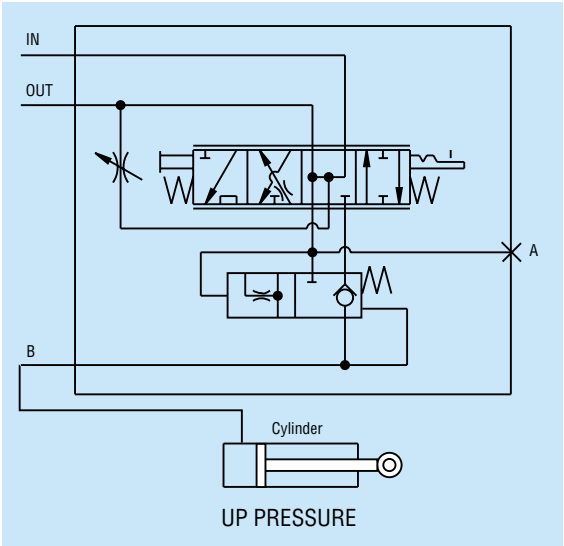

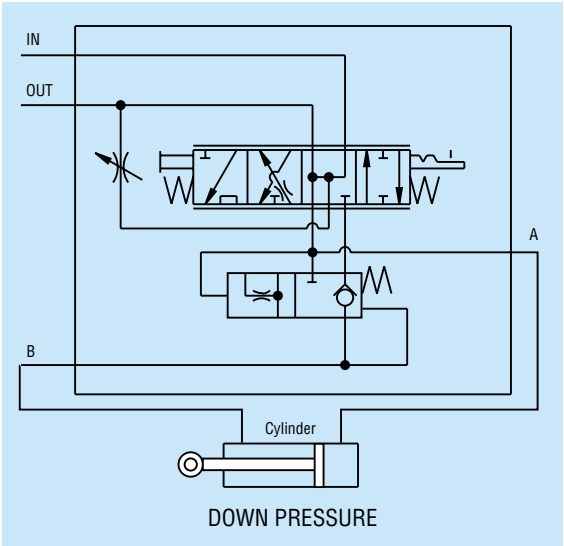

Eaton
Fluid Power Group
Hydraulics Business USA
14615 Lone Oak Road
Eden Prairie, MN 55344
USA
Tel: 952-937-9800
Fax: 952-294-7722
www.eaton.com/hydraulics

Eaton
Fluid Power Group
Hydraulics Business Europe
Route de la Longeraie 7
1110 Morges
Switzerland
Tel: +41 (0) 21 811 4600
Fax: +41 (0) 21 811 4601

Eaton
Fluid Power Group
Hydraulics Business Asia Pacific
11th Floor Hong Kong New World Tower
300 Huaihai Zhong Road
Shanghai 200021
China
Tel: 86-21-6387-9988
Fax: 86-21-6335-3912

Powering Business Worldwide

© 2008 Eaton Corporation
All Rights Reserved
Printed in USA
Document No. E-VLMB-MC005-E
Supersedes 11-514
November 2008