Eaton
Hydraulics
Division

Parts Information

Model 30540 Directional Control Valve

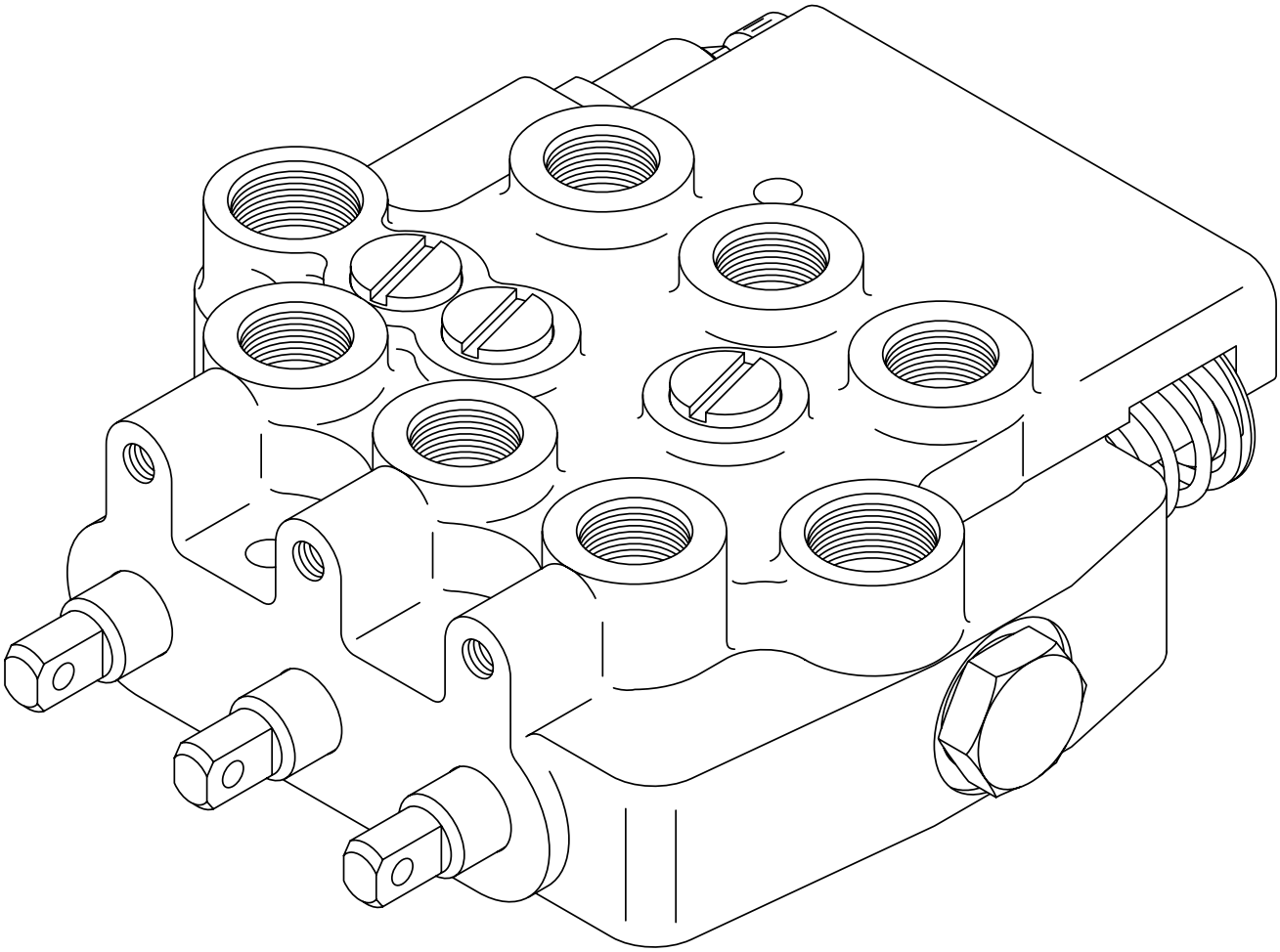

Parts Drawing

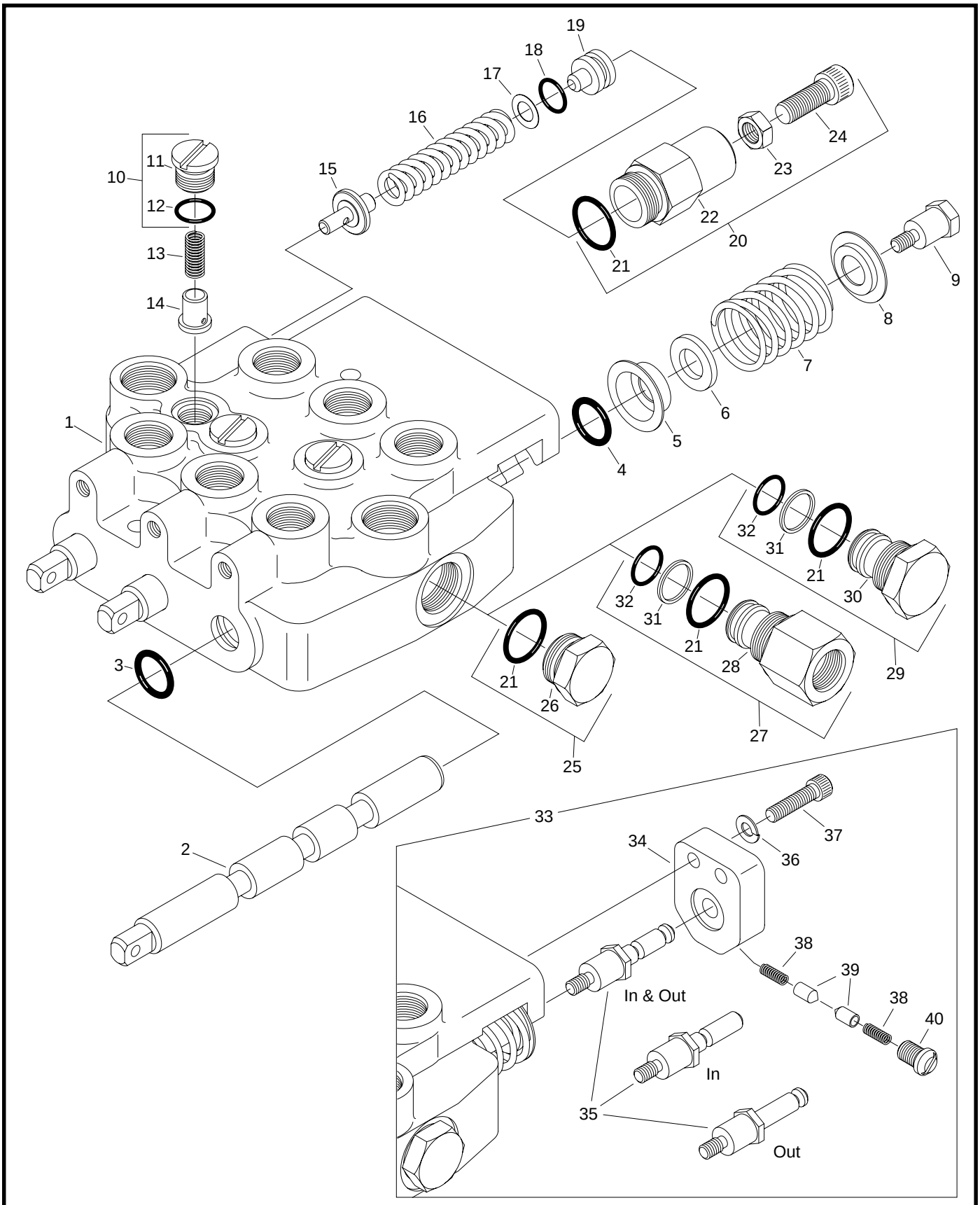

© Copyright 1991 Eaton Corporation

Ref. No.	Description	Part Number	Quantity
1	Body	NSS	1
2	Spool	NSS	A/R
~ 3	O-ring	16004 - 663	1/Spool
~ 4	O-ring	16003 - 612	1/Spool
5	Deep Washer	30501 - 10	1/Spool
6	Washer	16048 - 121	1/Spool
7	Spring, Spool	17125 - 10	1/Spool
8	Shallow Washer	15546 - 6	1/Spool
9	Spool Screw	30501 - 390	1/Spool
10	Lift Check Plug Assembly	16227 - 09	1/Spool
11	Lift Check Plug	NSS	1/Spool
~ 12	O-ring	16003 - 210 - 90	1/Spool
13	Spring, Lift Check	30501 - 13	1/Spool
14	Lift Check Plunger	30501 - 12	1/Spool
15	Poppet	30501 - 417	1
16	Spring, Relief Valve	*	1
† 17	Shim Washer	16048 - 69	A/R
18	O-ring	16003 - 9	1
19	Spring Guide	30501 - 418	1
20	Relief Valve Cap Assembly	30501 - 312	1
~ 21	O-ring	16003 - 14	2
22	Relief Valve Cap	30501 - 104	1
23	Jam Nut	16024 - 6	1
24	Cap Screw	16148 - 610	1
25	Standard Plug Assembly	16169 - 1140	1
26	Standard Plug	NSS	1
27	Pressure Beyond Plug Assembly (3/4-16 SAE)	30501 - 74	1
28	Pressure Beyond Plug (3/4-16 SAE)	NSS	1
29	Closed Center Plug Assembly	30501 - 96	1
30	Closed Center Plug	NSS	1
31	Back-Up Ring	16101 - 204	1
32	O-ring	16015 - 4	1
	Seal Repair Kits		
	One Spool Valves	30501 - 918	
	Two Spool Valves	30502 - 934	
	Three Spool Valves	30540 - 902	

NSS Not sold separately
A/R As required
† Install the same shim thickness as removed. At least one shim is required.
* Refer to the table on the back page for specific part numbers.
~ Parts included in Seal Repair Kits.

Spool Detents

Ref No.	Description	Part Number			Quantity
		Detent Out	Detent In	Detent In & Out	
33	Detent Kit	30540 - 911	30540 - 912	30540 - 913	
34	Detent Block	30501 - 136	30501 - 136	30501 - 136	1
35	Detent Screw	30501 - 304	30501 - 303	30501 - 305	1
36	Lock Washer	16045 - 104	16045 - 104	16045 - 104	2
37	Cap Screw	16147 - 410	16147 - 410	16147 - 410	2
38	Pawl Spring	30610 - 34	30610 - 34	30610 - 34	2
39	Detent Pawl	15480 - 37	15480 - 37	15480 - 37	2
40	Pawl Plug	30501 - 135	30501 - 135	30501 - 135	1

Handle Parts

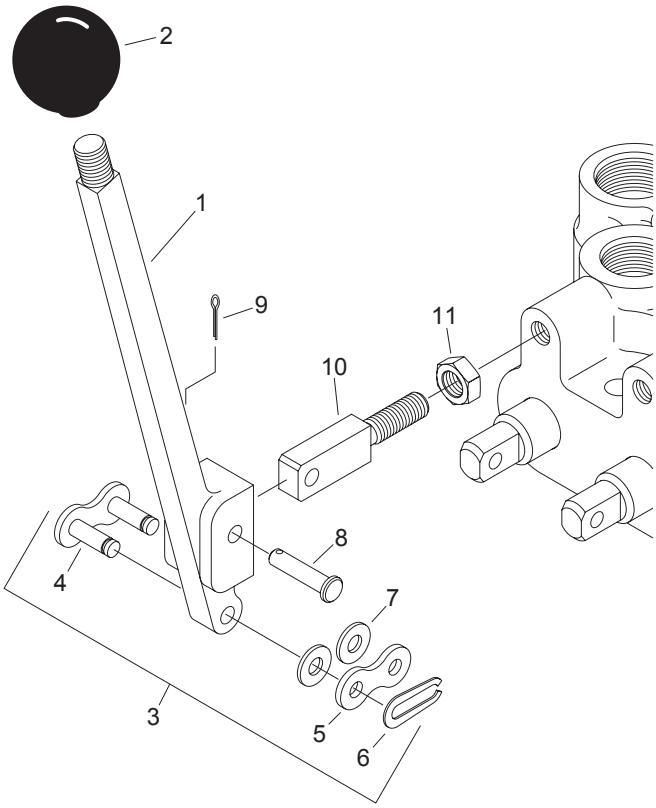

Ref. No.	Description	Part Number	Quantity
	Handle Kit	30540-904	1/Spool
1	Handle	30540-300C	1
2	Knob	16052-110	1
3	Handle Link Assy.	30501-331	1
4	Connecting Link	30501-332	1
5	Link Plate	30501-333	1
6	Spring Clip	30501-334	1
7	Washer	32016-7	2
8	Clevis Pin	16182-313	1
9	Cotter Pin	16027-204	1
10	Lever Support	30540-302	1
11	Jam Nut	16024-5	1

Ref. No. 16 Relief Valve Spring

Pressure Adjustment Range	Part Number
1000 - 1500 PSI	17060-37
1450 - 2000 PSI	17060-38
1950 - 2300 PSI (Standard)	17060-39
2250 - 2500 PSI	17060-40

Information on orifice plates is contained in the Orifice Plate Catalog Sheet, Form 11-502.

Eaton
Fluid Power Group
Hydraulics Business USA
14615 Lone Oak Road
Eden Prairie, MN 55344
USA
Tel: 952-937-9800
Fax: 952-294-7722
www.eaton.com/hydraulics

Eaton
Fluid Power Group
Hydraulics Business Europe
Route de la Longeraie 7
1110 Morges
Switzerland
Tel: +41 (0) 21 811 4600
Fax: +41 (0) 21 811 4601

Eaton
Fluid Power Group
Hydraulics Business Asia Pacific
11th Floor Hong Kong New World Tower
300 Huaihai Zhong Road
Shanghai 200021
China
Tel: 86-21-6387-9988
Fax: 86-21-6335-3912

Powering Business Worldwide

© 2008 Eaton Corporation
All Rights Reserved
Printed in USA
Document No. E-VLMB-TP003-E
Supersedes 06-521
December 2008