Vickers®

Directional Controls

Service Parts Information

Directional Valves

CMD40 Series - 10 Design

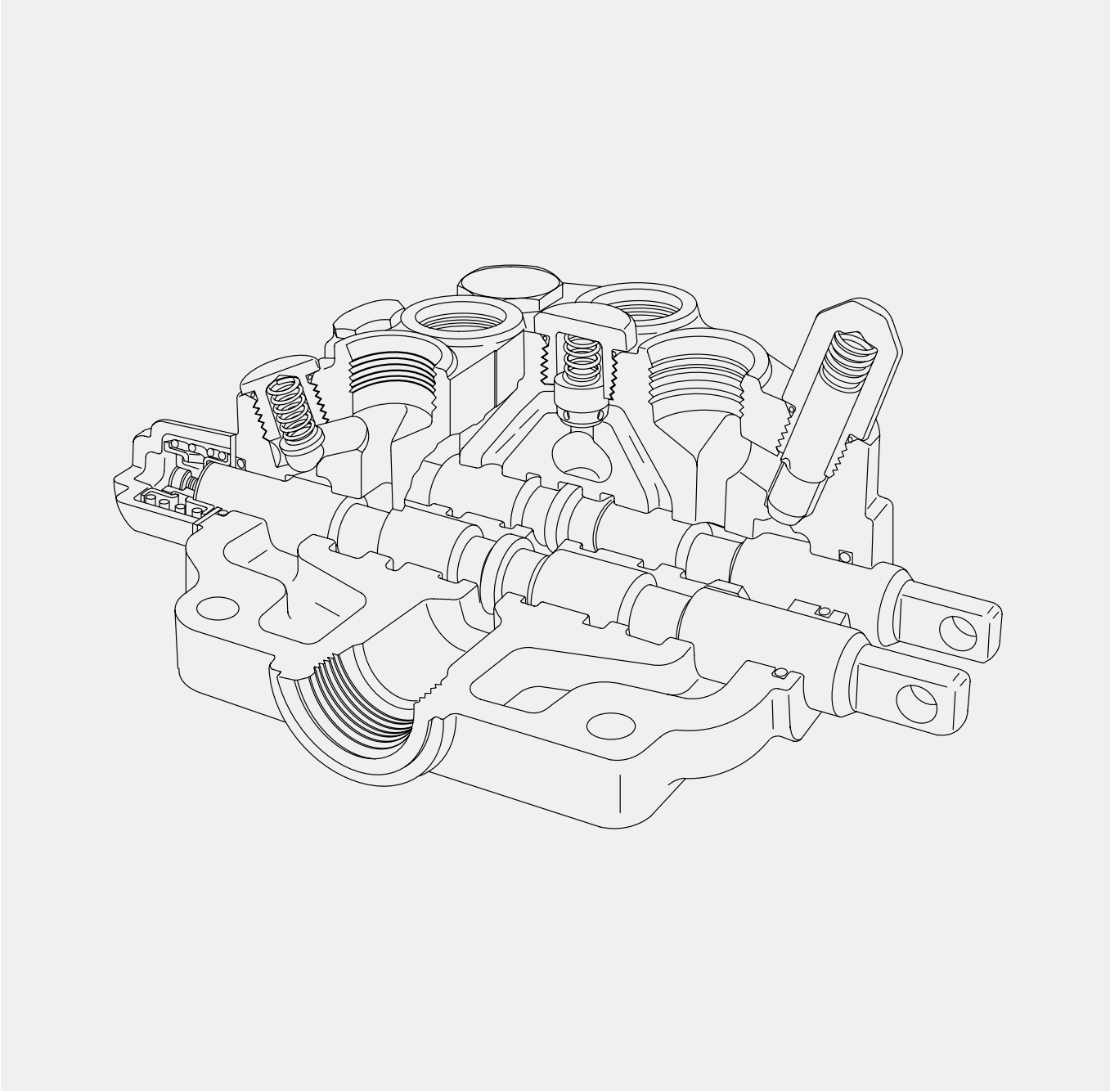

VICKERS

Revised 10/01/86

M-2421-S

Options

Float Spool Detent

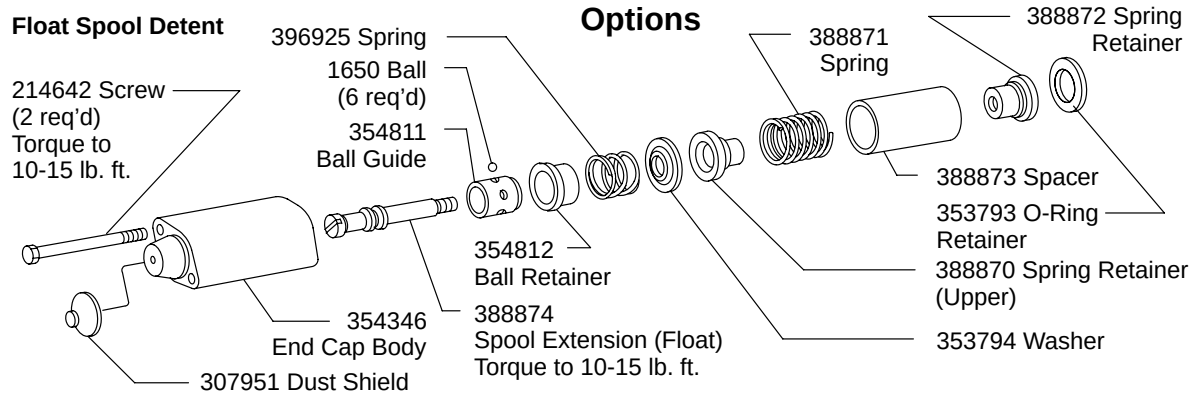

3 Position Detent

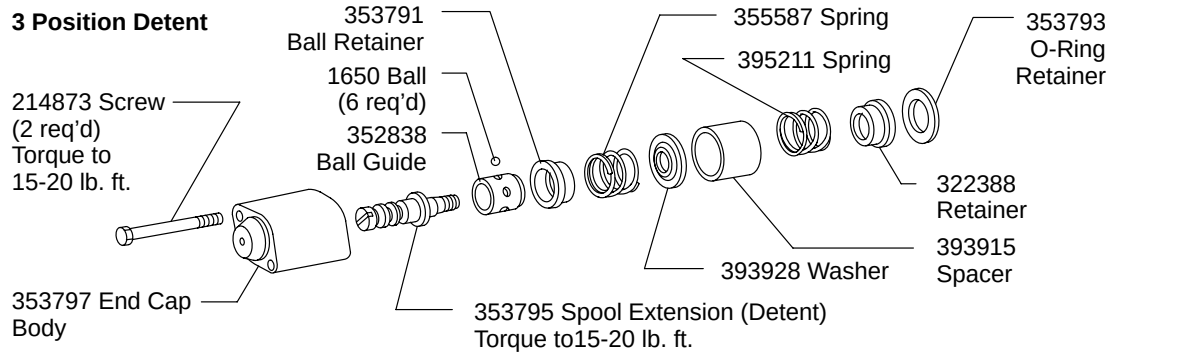

See Assembly Procedure

Hydraulic End Cap
3 Position

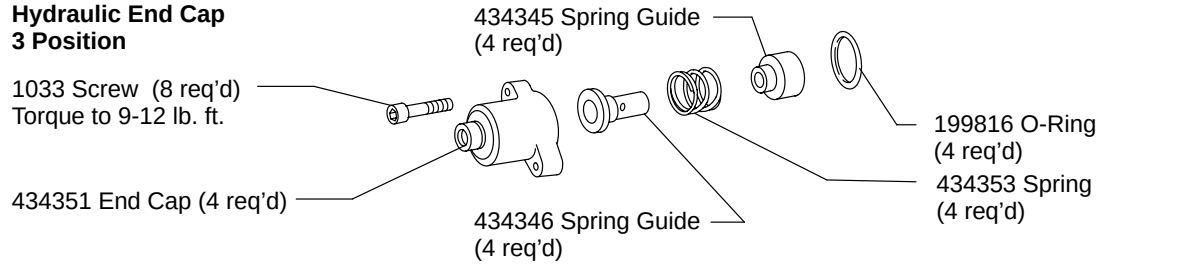

Note

Spool Changes with Hydraulic End Caps

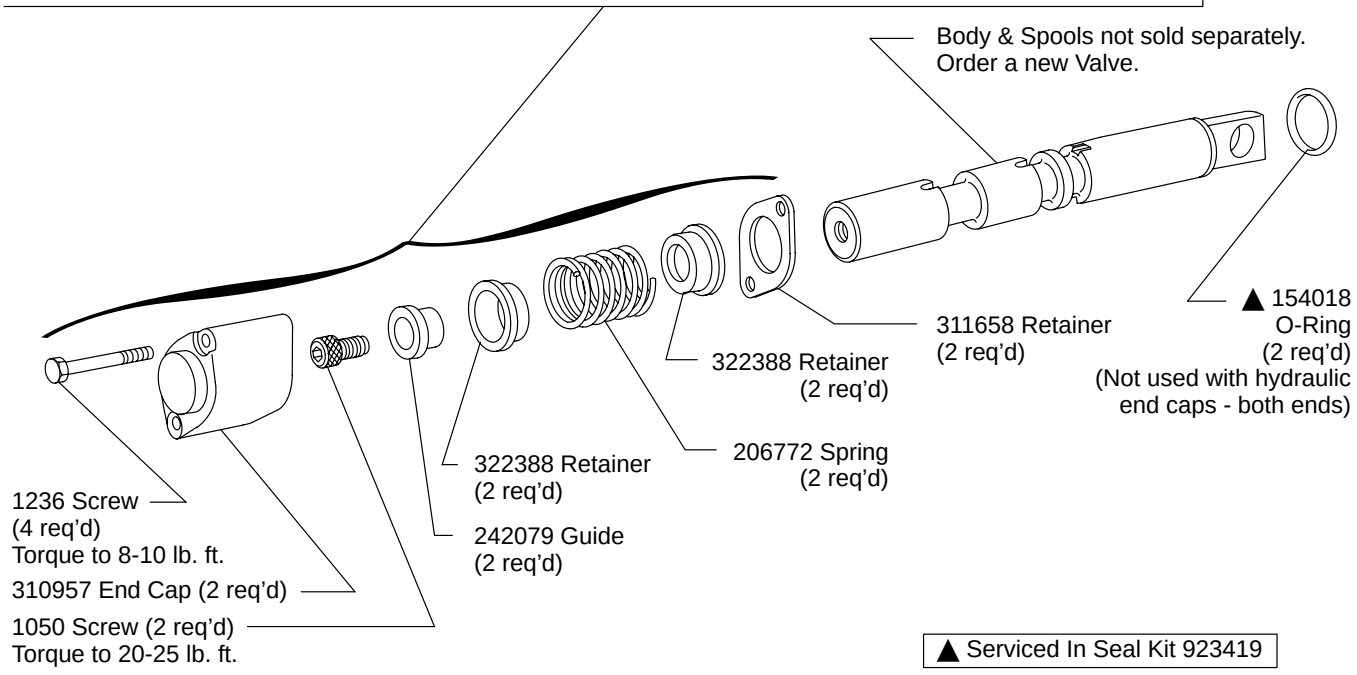

▲ Serviced In Seal Kit 923419

Model Designation	Relief Setting (psi)	Relief Valve Sub-Assy
CMD40**-*07*-10	750	319694
CMD40**-*10*-10	1000	319695
CMD40**-*12*-10	1250	319696
CMD40**-*15*-10	1500	319697
CMD40**-*17*-10	1750	319698
CMD40**-*20*-10	2000	319699
CMD40**-*22*-10	2250	319700
CMD40**-*25*-10	2500	319701
CMD40**-*27*-10	2750	319702
CMD40**-*30*-10	3000	319703

Port Relief Valve Kit ⁜	Relief Setting (psi)	Model Designation
263601	750	CMD40**-10-*07
263602	1000	CMD40**-10-*10
263603	1250	CMD40**-10-*12
263604	1500	CMD40**-10-*15
263605	1750	CMD40**-10-*17
263606	2000	CMD40**-10-*20
263607	2250	CMD40**-10-*22
263608	2500	CMD40**-10-*25
263688	2750	CMD40**-10-*27
263610	3000	CMD40**-10-*30
263611	3250	CMD40**-10-*32
263612	3500	CMD40**-10-*35

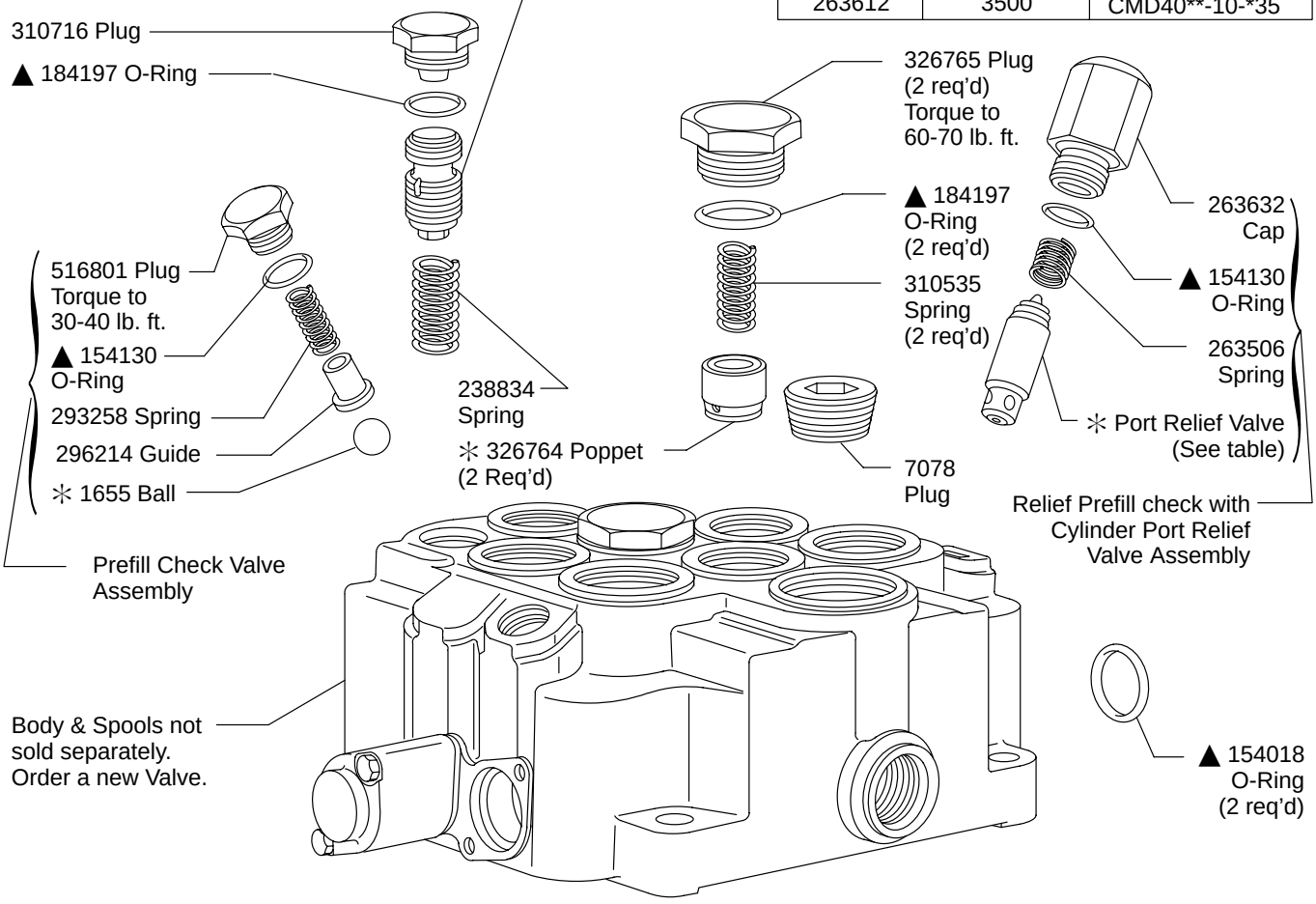

⁜ Seat into Body before installing Spring & Plug.

Float and 3 Position Detent Assembly Procdure

1. Insure that spool and detent extension are straight. Straighten if required.
2. Lubricate all parts liberally with water proof grease. Assemble cap and internal parts. Leave mounting screw backed off approximately 2 turns.
3. Shift spool in and out to align internal parts.
4. Cross torque mounting bolts to print requirements.
5. Check to insure there is no bind by rotating spool 360° and shifting spool in and out.

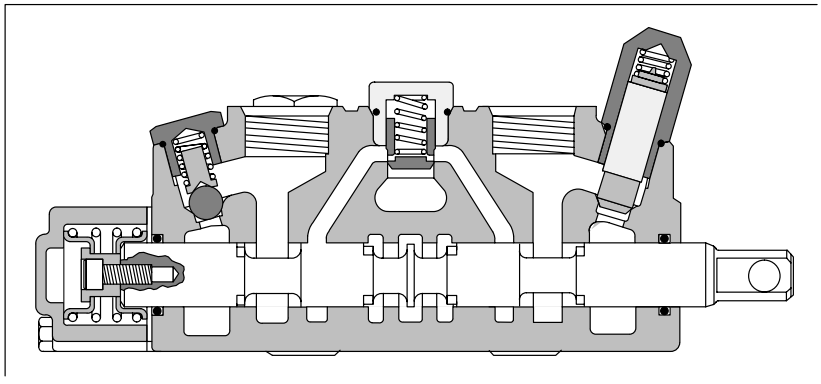

Model Code

CMD 40 - ** - ** - 10 - ****

1 2 3 4 5 6

1 **Mobile Directional Valve**

2 **Valve Capacity - USgpm (Nominal)**

40 - 40

3 **Integral Relief Valve Settings (psi)**

05	- 500	**22**	- 2250
07	- 750	**25**	- 2500
10	- 1000	**27**	- 2750
12	- 1250	**30**	- 3000
15	- 1500	**32**	- 3250
17	- 1750	**35**	- 3500
20	- 2000		

4 **Spool Sections**

D - Double Acting
R - Regenerative, Double acting, 4 Position
T - Single Acting
W - Reverse Single Acting

5 **Design**

6 **Assembly Number**

For satisfactory service life of these components use full flow filtration to provide fluid which meets ISO cleanliness code 20/18/15 or cleaner. Selections from Eaton OFP, OFR, and OFRS series are recommended.

Printed in U.S.A.