Command Signal Generator Card

EEA-DSG-450-A-10 Series

General Description

This card is used to generate input signals for open and closed loop electro-hydraulic control systems. In addition to internally applying the command signals which can be set on the card, it can be used for driving external command potentiometers; the internal potentiometers can then be used to limit the range of adjustment.

Features and Benefits

- The polarity of all five command signals can be changed using soldered links.
- The summing amplifier is provided with an additional input for cascading several cards.
- The amplifier has an inverting and a non-inverting output.
- The status of the relevant command signal is indicated on the front panel by LEDs.

Operating Data

Supply voltage . . . . . ±15V ±5%, x 50 mA max.
Impedance of potentiometer P1 to P5 . . . . . 2 kΩ
No. of command signal relays 5
Relay voltage . . . . . 24V ±20%, approx. 30 mA per relay
Male connector . . . . . DIN 41612, D32
Mass . . . . . 0,15 kg (0.33 lb)

Connection Diagram

EEA-DSG-450-A-10

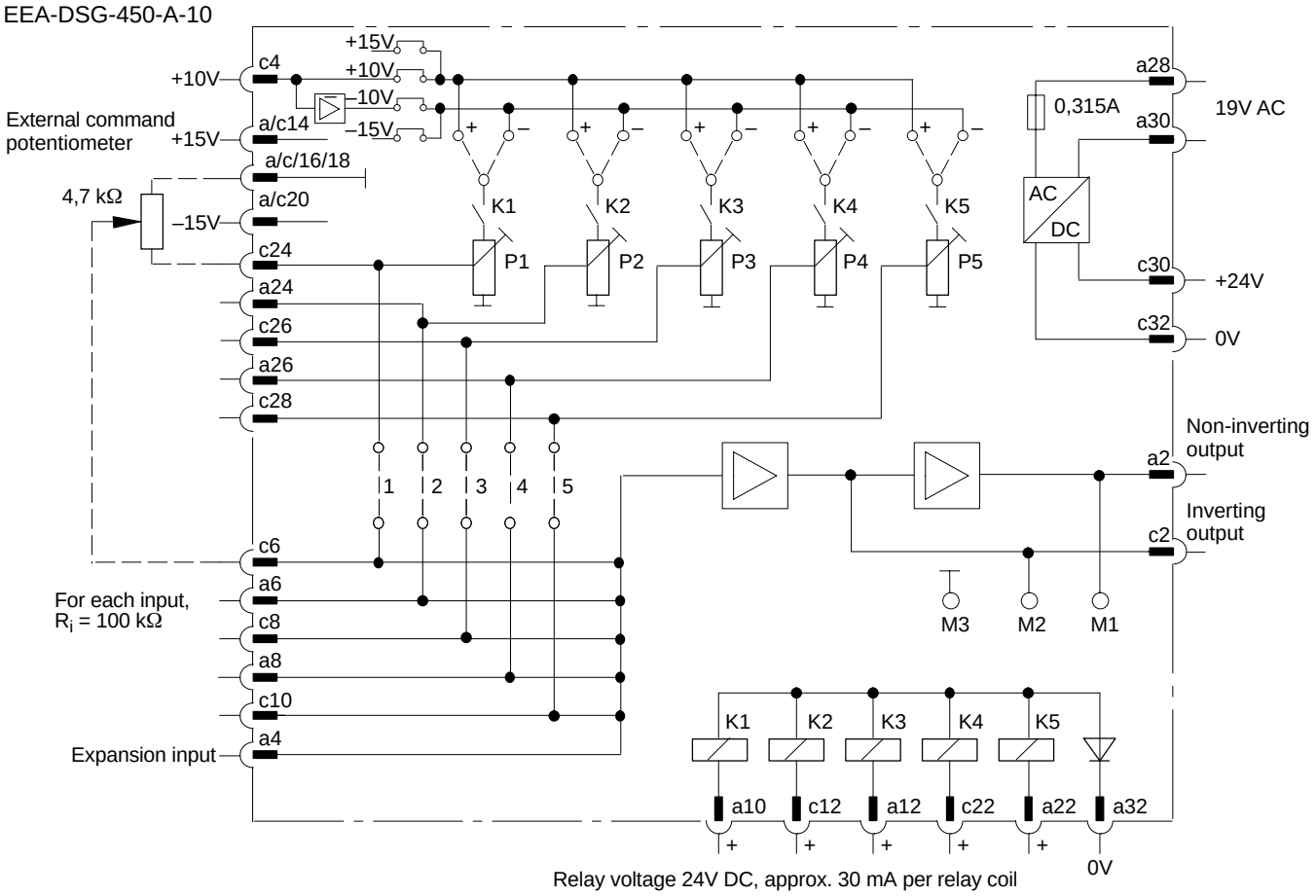

Installation Dimensions

mm (inch)

3rd angle projection

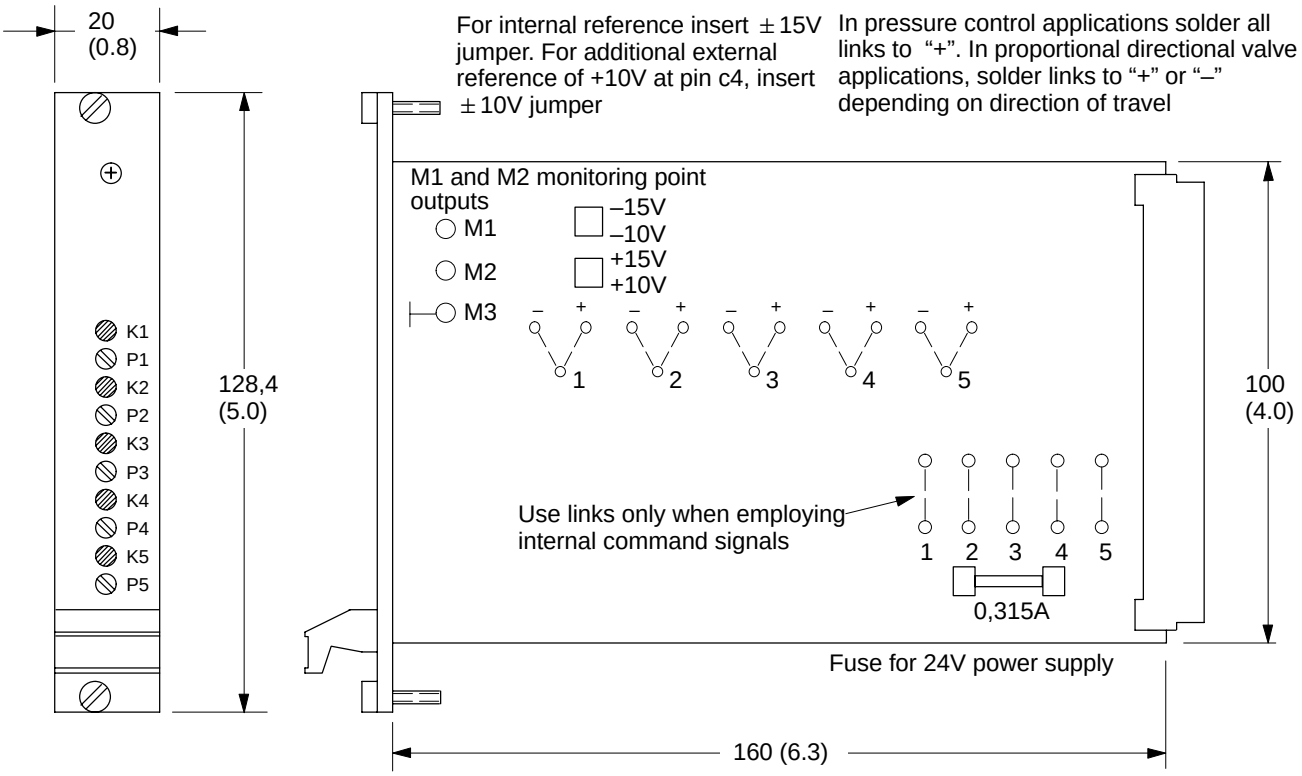

Eaton Hydraulics
15151 Highway 5
Eden Prairie, MN 55344
Telephone: 612 937-7254
Fax: 612 937-7130
www.eatonhydraulics.com

46 New Lane, Havant
Hampshire PO9 2NB
England
Telephone: (44) 170-548-6451
Fax: (44) 170-548-7110