Vickers®

Electro-Hydraulics

Comparator Card

EEA-LIM-454-A-10 Series

General Description

This card contains two limit comparators with one inverting and one non-inverting logic output, plus an output relay with a change-over contact.

Features and Benefits

- Individual input circuitry.
- – Separately adjustable switching thresholds.
- – Test points for positive and negative switching thresholds.
- – Test points for input signals.
- – Additionally usable OP AMP stages: 2 voltage followers and 1 inverter.
- – Switching state indicated by LEDs on the front panel.
- – Inverting, non-inverting and relay outputs with change-over contact.
- – Selectable drive inhibitor.

Operating Data

Supply voltage . . ±15V ±5% x 50 mA
Relay voltage or voltage for logic outputs . . . . . 24V DC 500 mA max.
Contact ratings of relays . . . . . 60V DC max., 1A
8 test points . . . . . Ø 2 mm (0.0787″ dia) sockets
Male connector . . . . . DIN 41612, D32
Mass . . . . . 0,13 kg (0.3 lb)

Connection Diagram

EEA-LIM-454-A-10

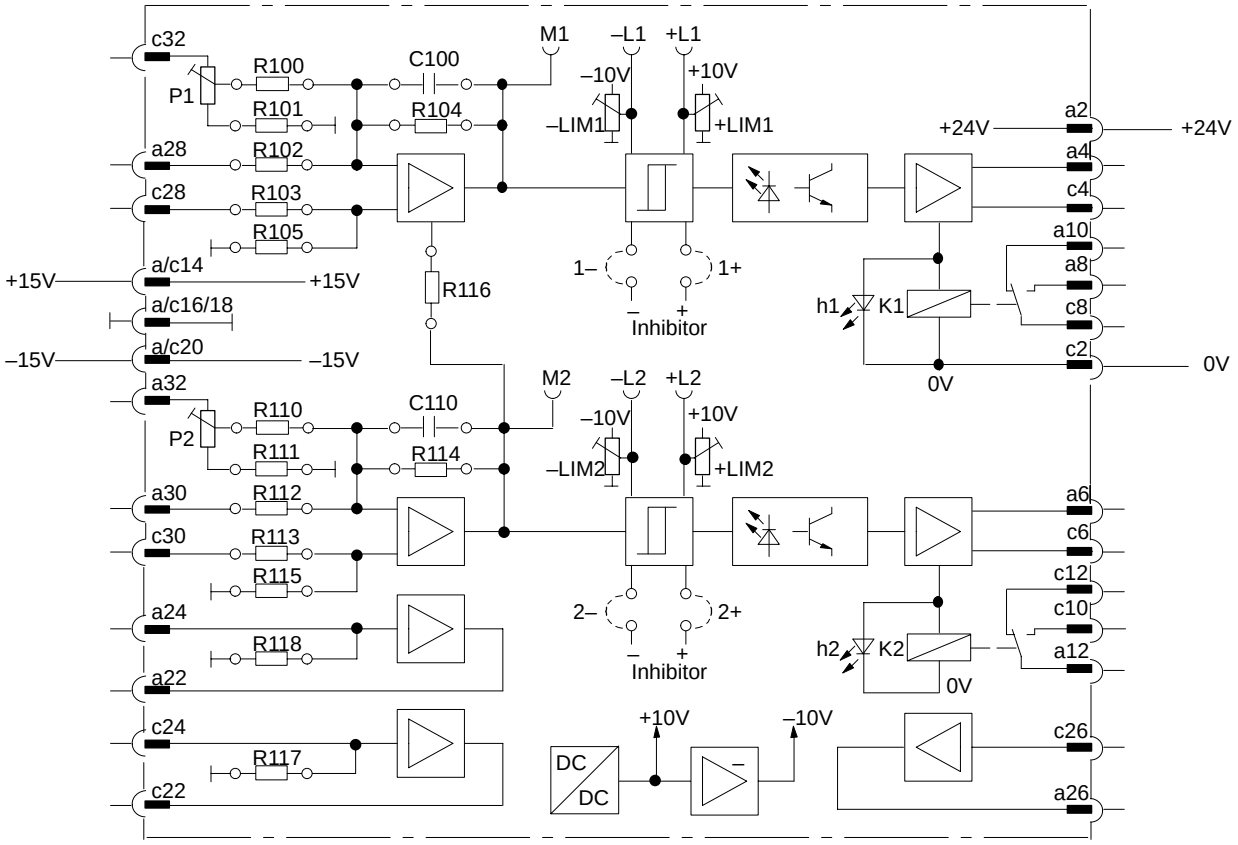

VICKERS

Installation Dimensions

mm (inch)

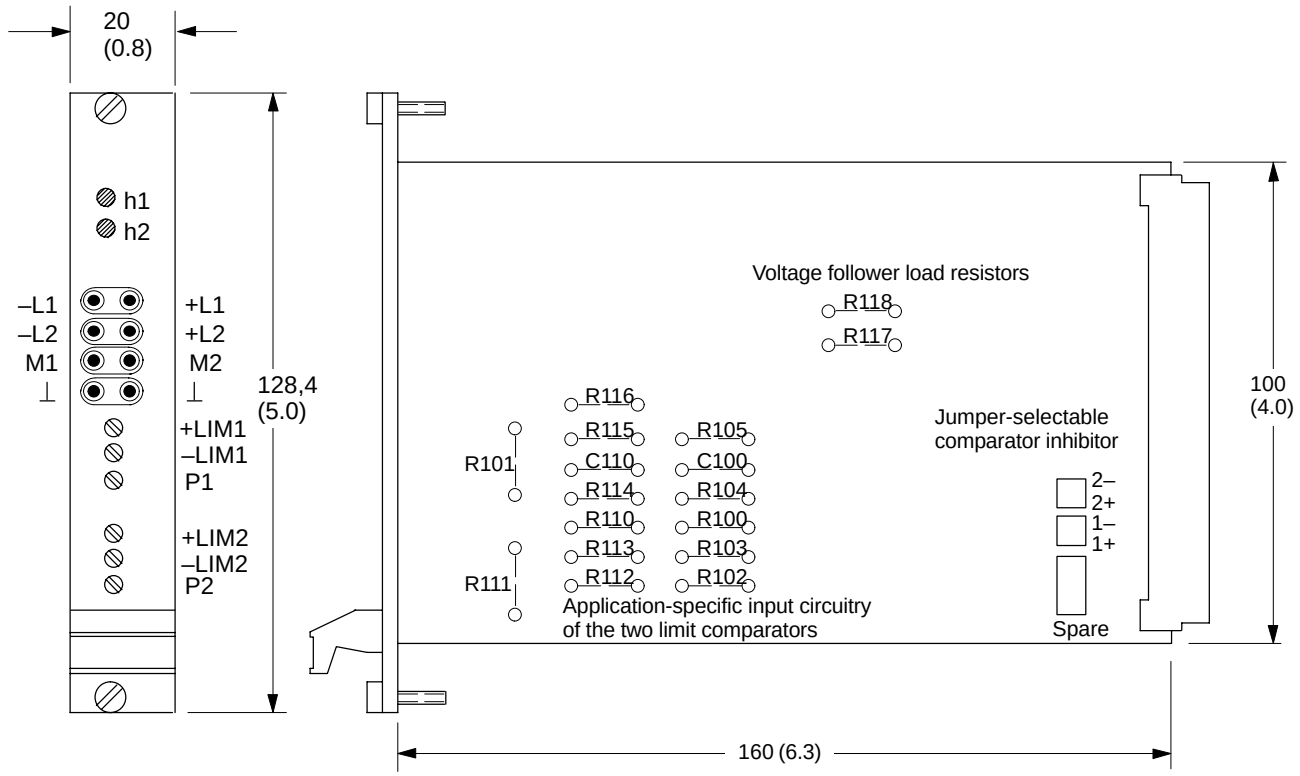

Eaton Hydraulics
15151 Highway 5
Eden Prairie, MN 55344
Telephone: 612 937-7254
Fax: 612 937-7130
www.eatonhydraulics.com

46 New Lane, Havant
Hampshire PO9 2NB
England
Telephone: (44) 170-548-6451
Fax: (44) 170-548-7110