For Use with Solenoid Operated Valves Rated to 24V DC
EHH-AMP-702-A-*-2* Series

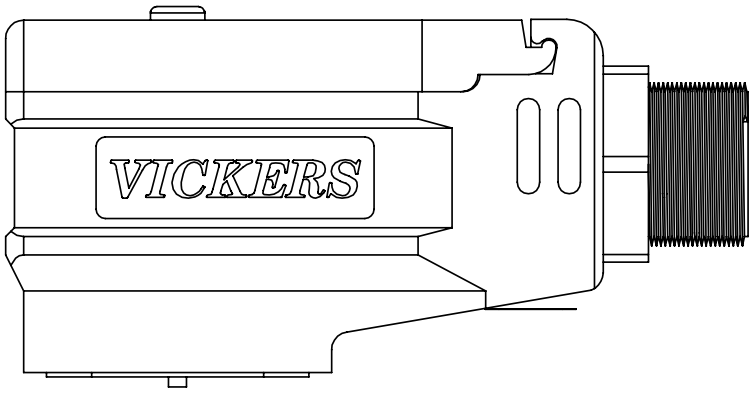

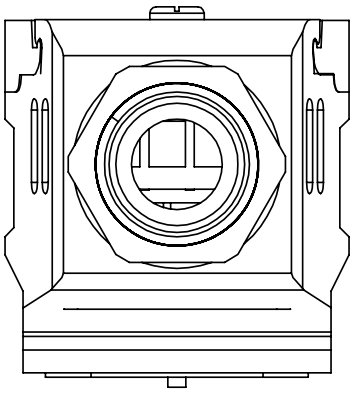

Model Code

EHH-AMP-702-A-*-2*

1 2 3

1 Type of Switch

A – Direct switching of power supply

2 Connection Option

1 – Standard PG9 cable clamp

2 – Metric M16x1.5 cable clamp

3 – M12x1 male connector

3 Design Number

21 – 21 Series

Subject to change. Installation dimensions unaltered for design numbers 20 to 29, inclusive.

This switching power plug is essentially a remote controlled on/off switch. When compared with switching relays, it gives more consistent valve response times and reduced de-energizing times.

Conforming to ISO 4400 (DIN 43650) interface, it has a built-in amplifier that enables the switching control signal for hydraulic and other types of on/off valves to be taken directly to the valve solenoid, instead of via a control cabinet relay.

Features/Benefits

- Improved control reliability
- Faster, more consistent load switching
- Smaller, cooler system control cabinets
- Low electrically generated noise
- Simpler, cost effective wiring of the application
- LED indicates "switched on"
- Same connection interface as conventional ISO 4400 (DIN 43650) plug
- Protection to IP67
- RoHS compliant

Electrical Block Diagram

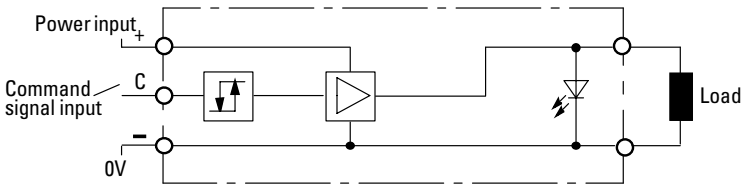

Powering Business Worldwide

Operating and Performance Data

⚠ **WARNING:** Reverse polarity connection can cause damage.

Electrical

Power input voltage ▲	24V DC (20-30V DC) including 10% maximum ripple (peak-to-peak) 24V DC nominal
Reverse polarity protection	No
Command signal: For "ON" For "OFF"	Ri = 2,4 kΩ 13-30V DC 0-6V DC
Output current: Peak Continuous	 2,1A 2A
Output voltage	Typically 0,8V below input V
Load	Any resistive or inductive load. Typical load: Vickers a DG4V-3 or DG4V-5 solenoid operated directional valve, including when used as a pilot valve.
Max. switching frequency at 50% duty cycles: 350 mH load DG4V-3 valve sol. DG4V-5 valve sol.	 5 Hz 4 Hz 3 Hz
Protection	IEC 529; IP67 (when correctly installed with interface seal)
Isolation to VDE 0110	Group B
Electromagnetic compatibility (EMC): Emission Immunity	 EN 61326-2-1 EN 61326-2-1

▲ *Connect 24V to "+" terminal; 0V to "–" terminal.*

Mechanical

Housing	PA6 glass reinforced plastic (conforms to UL-94HB). Color: gray
Mounting interface	ISO 4400 (DIN 43650). Pin locations can be turned through 180; polarity unchanged.
Cable clamp	PG9 screw type (Connection Option 1) M16x1.5 screw type (Connection Option 2)
Cable diameter	Ø5 to 10 mm (0.197 to 0.394 dia)
Wire section	0,5-1,0 mm2 (20-17 AWG)
Mating connector	M12x1 4 pin (Connection Option 3)
Temperature, ambient range	–20 to +70 C (–4 to +158 F)
Mass	0,07 kg (0.154 lb)

Typical Valve Response Times ■

Comparisons of response times of sample Vickers valves (circuited as shown on the right) when controlled from remotely located power relay and EHH-AMP-702-A-20.

Valve Model	Response Time (ms): Remote Switching	EHH-AMP-702-A-1-21 Plug
Energizing valve		
DG4V-3	50	50
DG4V-5	50	50
De-energizing valve		
DG4V-3	142	40
DG4V-5	150	45

■ *Typical data only: valve response times will vary with spool type, system pressure and flow, volume of fluid under compression, supply voltage, coil temperature, etc.*

Single Solenoid Valve Test Conditions

Connections

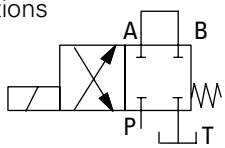

Pressure: 160 bar (2320 psi)

Flow rate: 60 l/min (16 USgpm)

Temperature: 55 C (131 F)

Power supply: 24V DC

Input signal◆: 24V DC

◆ *Switching signal to power plug.*

Installation Dimensions and Data

Dimensions shown in mm (in)

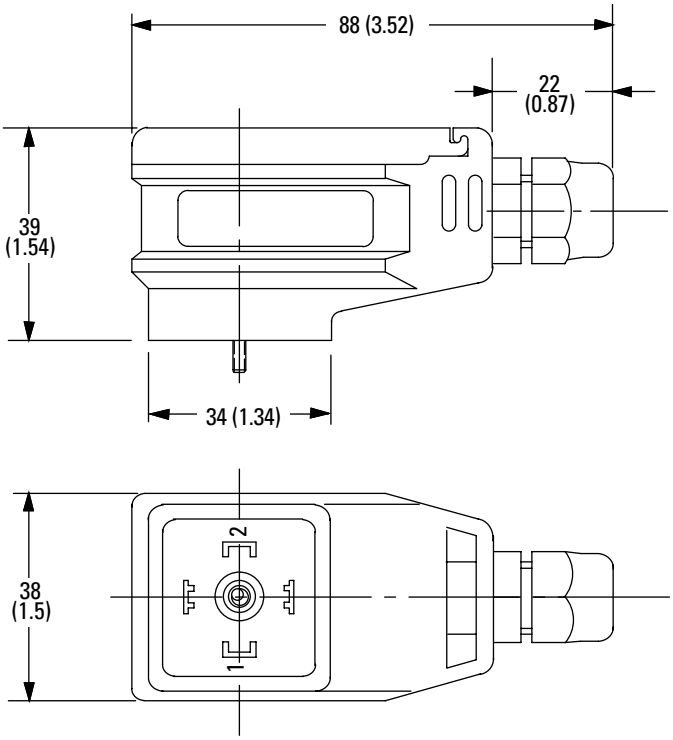

3rd Angle Projection

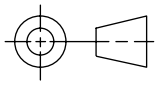

Solenoid Connections

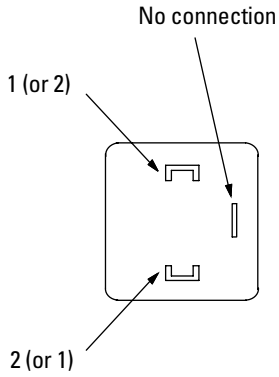

Assembly Showing Wiring Connection Points

WARNINGS

- Wire the plug for correct polarity. Wrong polarities can cause plug burn-out and/or machine malfunction.
- Tighten the cable clamp to secure the cable.
- Do not connect, or disconnect the plug while power is on.

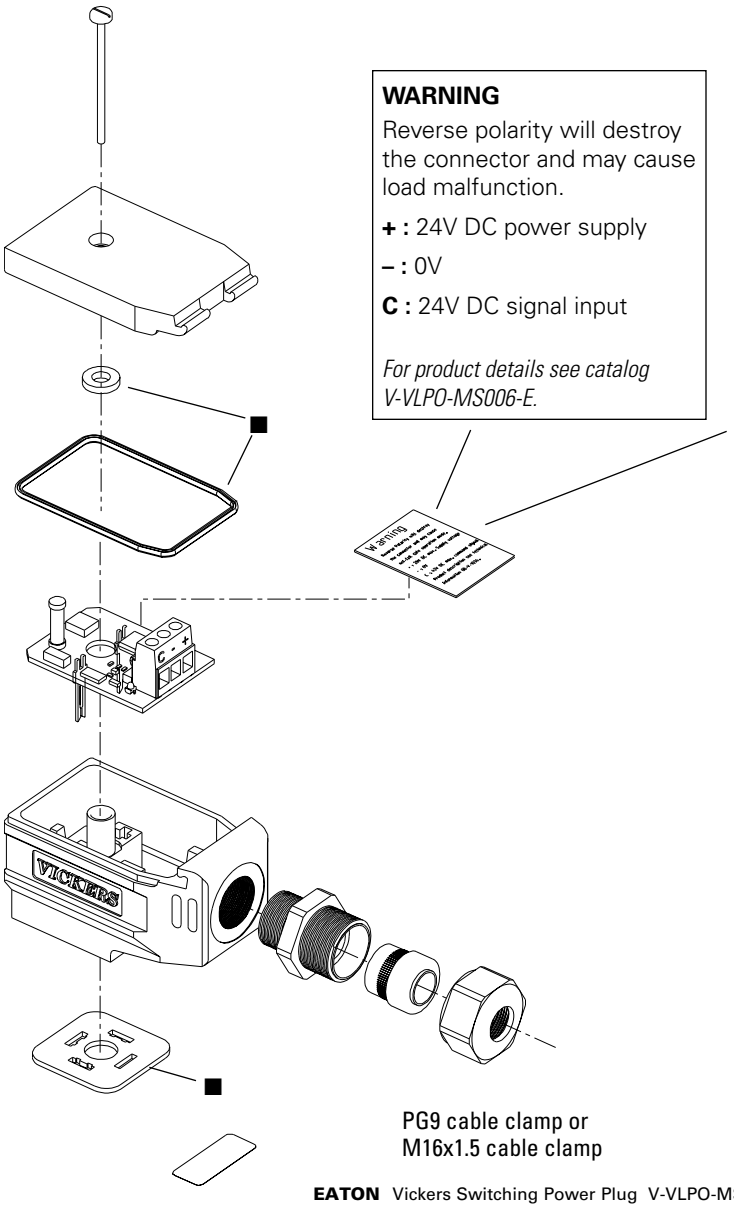

WARNING

Reverse polarity will destroy the connector and may cause load malfunction.

+ : 24V DC power supply

– : 0V

C : 24V DC signal input

For product details see catalog V-VLPO-MS006-E.

After observing the printed warning this adhesive label may be peeled off the amplifier and discarded

PG9 cable clamp or M16x1.5 cable clamp

■ *All seals must be fitted correctly at plug installation to provide protection to IP67 (IEC 529).*

Assembly Connection Option 3 - M12 Connector

Please refer to all safety warnings located on page 3.

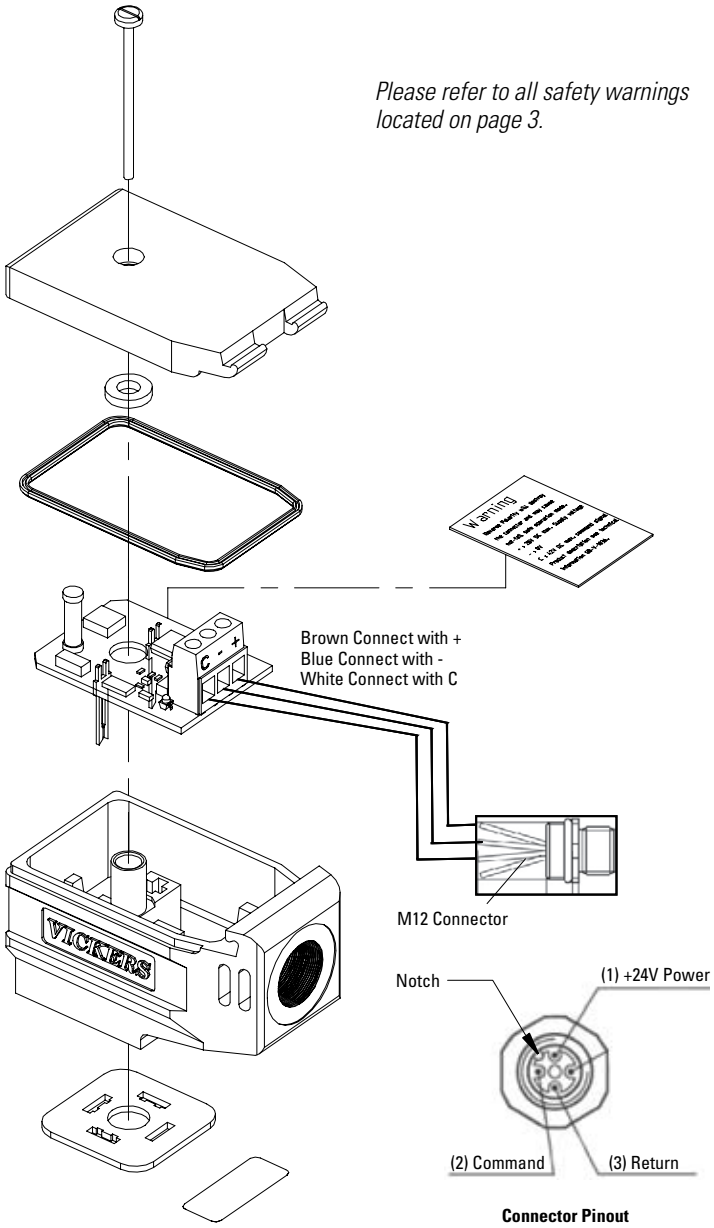

Connector Pinout

Start-Up Procedure

1. With the plug correctly wired but not mounted to the load, provide it with 24V power supply.
2. Apply a 13V to 30V DC (24V nominal) command signal and check that the integral LED illuminates. Reduce the signal to 6V DC (or open circuit) and check that the LED goes out.
3. If there is a malfunction of the LED replace the plug.
4. Switch off the power supply and the command signal and connect the plug to the load. Ensure that the interface seal is correctly fitted and clamped between the mounting faces (essential for IP67 protection). Tighten the retaining screw.
5. Ensure that no damage or injury will occur on the machine when the valve is operated.
6. Switch on the power supply. Apply a command signal to:

   (a) illuminate the LED and,

   (b) energize the load (e.g. solenoid valve).

   If the LED does not illuminate there is a short circuit in the load. Replace the load/load coil.
7. Successful completion of these steps means that the plug and load are ready for normal use.

Spare Parts

The only spare part available is the interface seal, part number 732100.

Ordering Procedure

Order plugs by full model code

Model Code	Part No.
EHH-AMP-702-A-1-21	5995381-001
EHH-AMP-702-A-2-21	5995381-002
EHH-AMP-702-A-3-21	5995381-002
Seal	732100

Eaton
Hydraulics Business USA
14615 Lone Oak Road
Eden Prairie, MN 55344
USA
Tel: 952-937-9800
Fax: 952-294-7722
www.eaton.com/hydraulics

Eaton
Hydraulics Business Europe
Route de la Longeraie 7
1110 Morges
Switzerland
Tel: +41 (0) 21 811 4600
Fax: +41 (0) 21 811 4601

Eaton
Hydraulics Business Asia Pacific
11th Floor Hong Kong New World Tower
300 Huaihai Zhong Road
Shanghai 200021
China
Tel: 86-21-6387-9988
Fax: 86-21-6335-3912

Powering Business Worldwide

© 2009 Eaton Corporation
All Rights Reserved

Printed in USA
Document No. V-VLPO-MS006-E
January 2009