VICKERS®

Accessories

Power Plugs for Proportional Valves
(12 volt supply)

EHH-AMP-712-D/G-2* Series

For use with valve types:
KDG4V-3(S)-GP7-6*
KTG4V-3(S)-GP7-6*
KCG-3/6/8-GP1-1*
KX(C)G-6/8-GP1-1*
KDG5V-5/7/8-GP1-1*
CMX***-E-G
EPV**-12D-1*
ERV1/2**-12D-1*
EPFR1**-12D-1*

General Description

These plugs, conforming to ISO 4400/ DIN 43650 interface, offer low cost solutions for solenoid-operated, non-feedback hydraulic proportional valves through the use of an integral amplifier.

Adjustments of “gain”, “ramp time”, “deadband” and “dither” can be made directly at the plug.

The proportional plugs are controlled with 0-5V or 0-10V command signal to give an output current (adjustable with the gain control) of up to 3A maximum.

Features and Benefits

- Integral amplifier provides essential functions for control of proportional valves
- Differential command signal option (type D)
- 8 volt reference option (type G)
- Adjustable ramp time
- Adjustable deadband compensation
- Adjustable gain
- Adjustable dither
- Ease of installation with reduced cost
- EMC to latest European standards
- Fully short-circuit and reverse polarity protected
- Protection to IP67

Electrical Block Diagrams

EHH-AMP-712-D-2*

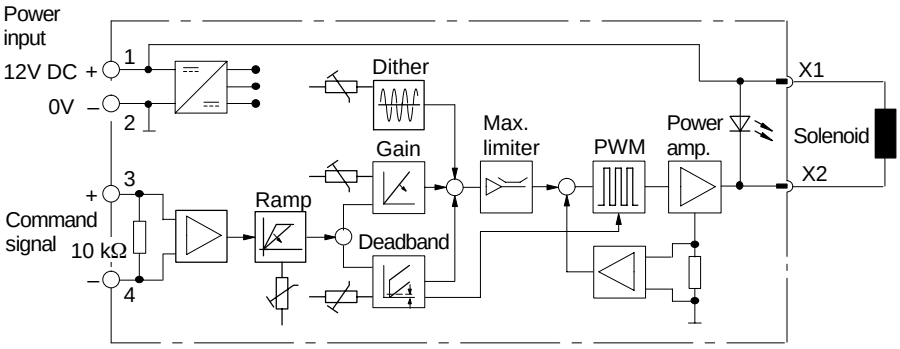

EHH-AMP-712-G-2*

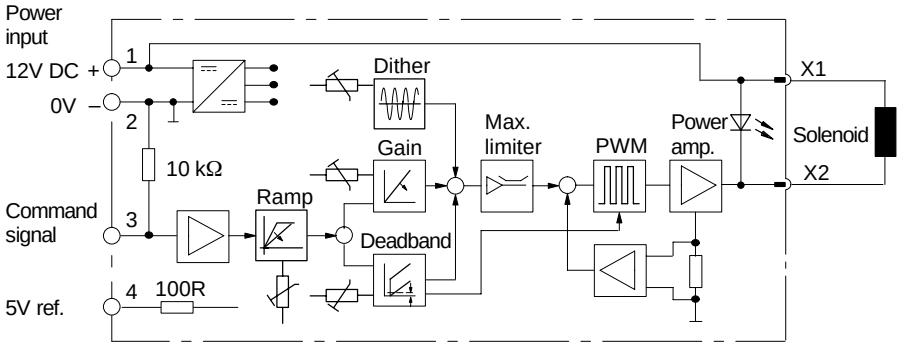

VICKERS

This product has been designed and tested to meet specific standards outlined in the European Electromagnetic Compatibility Directive (EMC) 89/336/EEC, amended by 91/263/EEC, 92/31/EEC and 93/68/EEC, article 5. For instructions on installation requirements to achieve effective protection levels, see this leaflet and the Installation Wiring Practices for Vickers Electronic Products leaflet 2468. Wiring practices relevant to this Directive are indicated by ⚠ Electromagnetic Compatibility (EMC).

Application and Model Codes

Application

Primary applications are the control of non-feedback proportional valves where the cost of sophisticated electronic controls can be avoided.

The combination of proportional valve and plug offers very low cost solutions to many hydraulic actuator control problems requiring smooth acceleration and deceleration.

Model Codes

EHH-AMP-712-* - 2*

1 2

1 **Adjustment range**

D = 10V differential input: 5s maximum ramp time

G = 5V input: 5s maximum ramp time

2 **Design number, 20 series**

Subject to change. Installation dimension unaltered for design numbers 20-29 inclusive.

Operating Data

Electrical

	Type D	Type G
Connections 1 2 3 4	 12V DC 0V (power and signal) Positive command signal Negative command signal	 12V DC 0V (power and signal) Positive command signal 5V reference voltage
Power (input) supply	10.2-16V DC including ±10% maximum ripple (peak-to-peak) 12V DC nominal	
Absolute maximum voltage	36V	
Max. power consumption incl. solenoid	35W	
Reverse polarity protected	Yes	
Short circuit protected	Yes	
Maximum output current	3.0A	
Max. output voltage typical (3A output current)	Typically 1.5V below supply voltage	
Command signal	0-10V (10 kohms)	0-5V (10 kohms)
Deadband triggering For output For no output	200 mV 200 mV to 10V 0 mV to 100 mV	200 mV 200 mV to 5V 0 mV to 100 mV
Deadband adjustment range	<100 - 1000 mA	
Gain adjustment range	<0.075 A/V to 0.3 A/V	>0.15 A/V to 0.6 A/V
Dither adjustment range	0 to 500 mA	
Ramp time	50 ms to 5s	
PWM frequency	1200 Hz ±10%	
Dither frequency	120 Hz ±10%	
Protection	IEC 529: IP67 (when correctly installed with interface seal in place) Fully short-circuit and reverse-polarity protected	
Isolation to VDE 0110	Group “B”	
Electromagnetic compatibility (EMC): Emission Immunity	 EN 50081-2 EN 50082-2	

Mechanical

Housing	PA6 glass-reinforced plastic (conforming to UL-94HB). Color: gray
Mounting interface	ISO 4400 (DIN 43650)
Cable clamp	Pg9 screw type
Cable diameter	Ø 5 to 10 mm (0.197 to 0.394 dia)
Wire section	0,5 to 1,0 mm^2 (0.001 to 0.002 in^2) (20 AWG-17 AWG)
Temperature, ambient range	–20 to 70°C (–4 to +158°F)
Mass	0,07 kg (0.154 lb)

Input/Output Characteristics

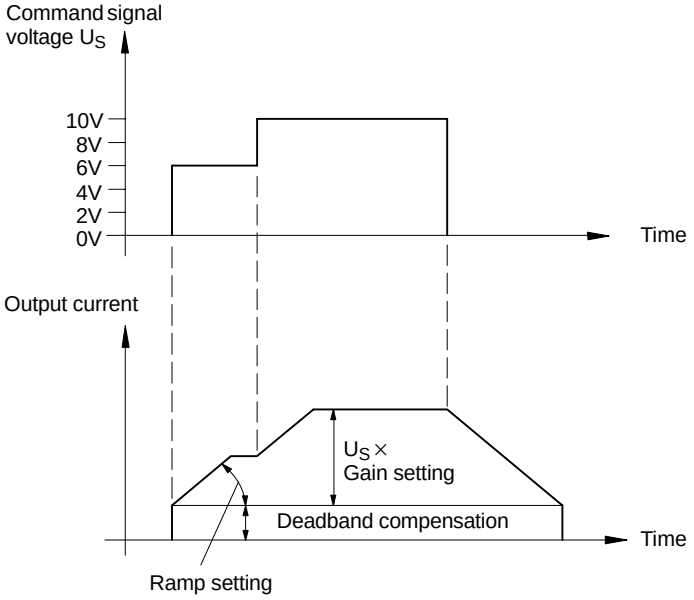

Installation Dimensions in mm (inches)

3rd angle projection

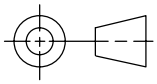

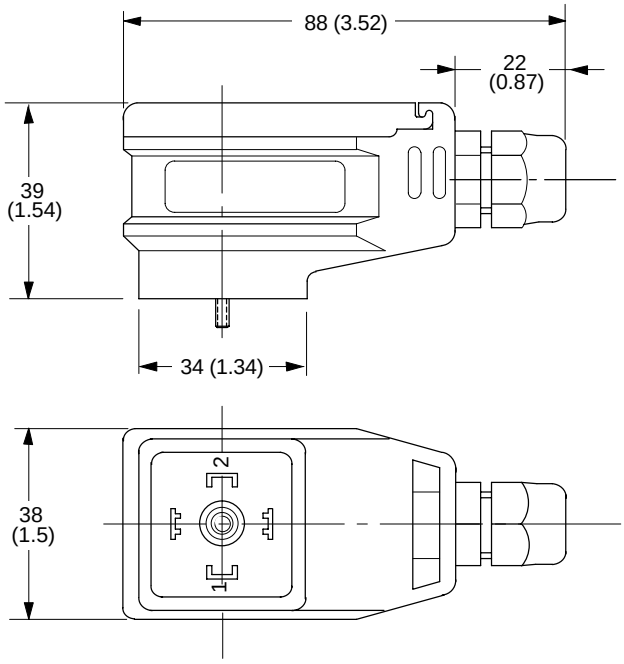

Solenoid Connections

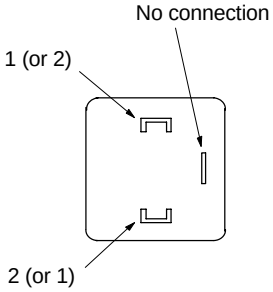

Installation Data

Adjustments

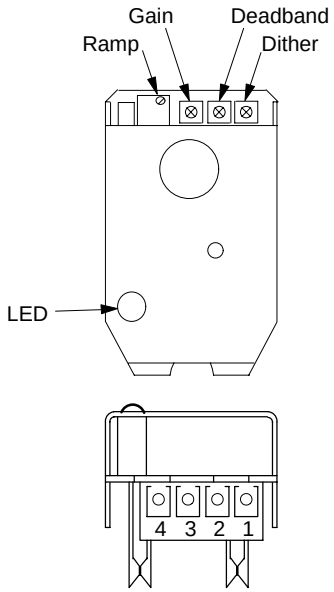

Ramp time:
Turn clockwise to increase ramp time.

Gain:
Turn clockwise to increase gain.

Deadband compensation:
Turn clockwise to increase deadband compensation current.

Dither:
Turn clockwise to increase the dither current.

Terminal 1:
Power supply 10.2V-16V DC, positive.

Terminal 2:
Power supply 0V.

Terminal 3:
Command signal positive (see “Operating Data”).

Terminal 4:
Type D: Command signal negative.
Type G: +5V reference.

Installation Wiring Options

Positive Command Voltage

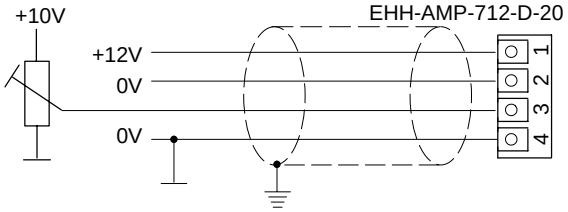

Negative Command Voltage

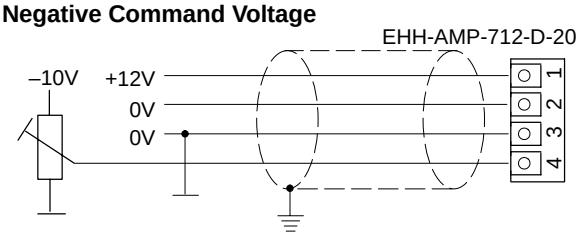

External 5V Command Signal

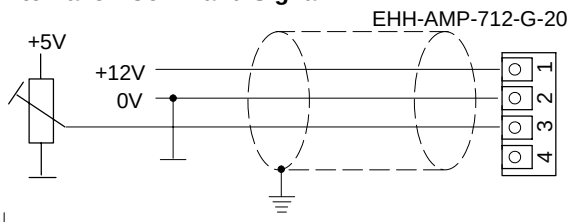

Customer’s protective ground connection.

Bi-polar Command Voltage for Operating Two Solenoids from One Signal

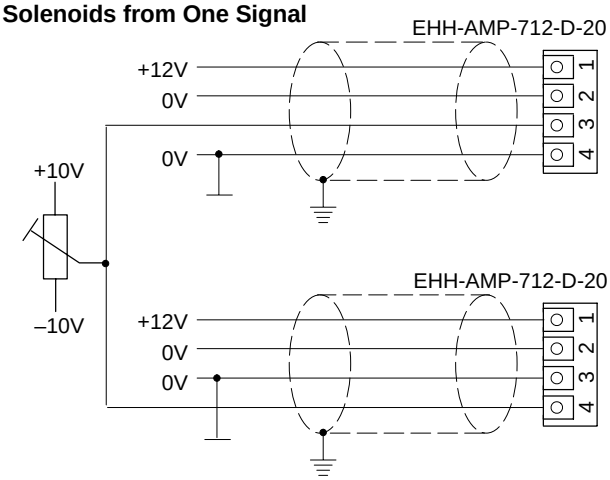

Internal 5V Command Signal

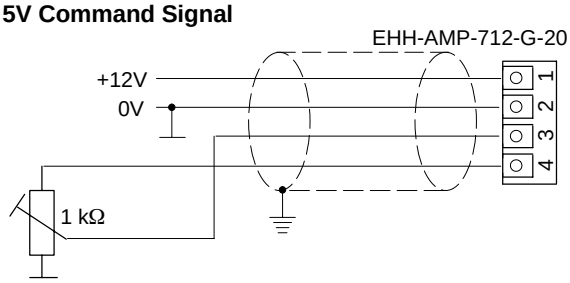

Warning: *Electromagnetic Compatibility (EMC)*
Screened cables should be used and particular attention paid to the grounding of the screens as shown in the above diagrams.

Assembly Showing Wiring Connection Points

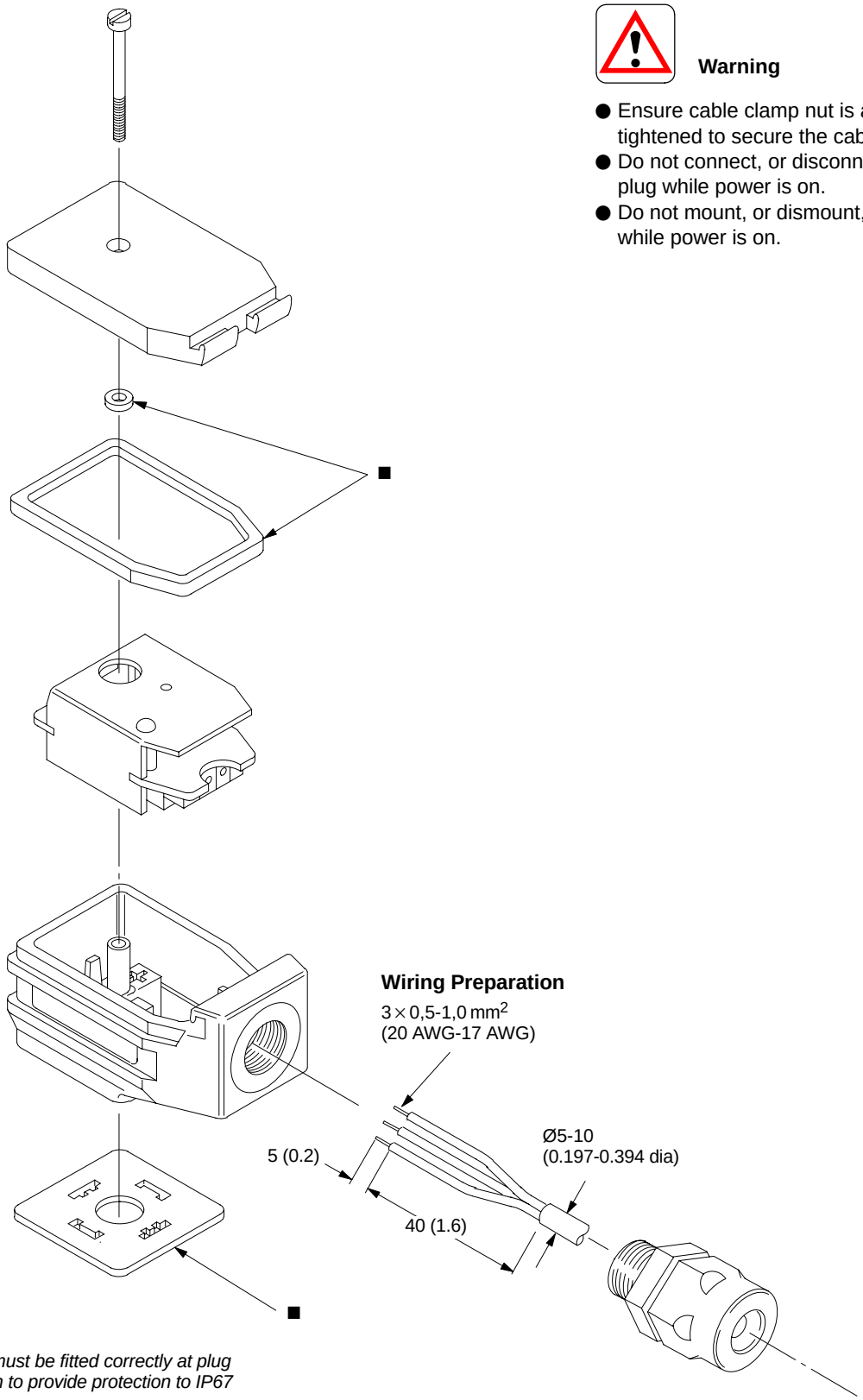

Warning

- Ensure cable clamp nut is adequately tightened to secure the cable.
- Do not connect, or disconnect, the plug while power is on.
- Do not mount, or dismount, the plug while power is on.

■ *All seals must be fitted correctly at plug installation to provide protection to IP67 (IEC 529).*

Start-Up Procedure

1. Correctly wire the plug (see drawing on previous page) then, before mounting the plug on the valve solenoid, apply 12V DC (10,2 to 16V limits) to the “power input” terminals.

2. Check for correct plug function by illumination/non-illumination of the LED. The LED should illuminate when the command signal is applied, and should not be illuminated when the signal is less than 100 mV. If there is a malfunction then a new plug must be fitted.

3. Switch off power supply and command signal and then install the plug on the solenoid. Ensure that the seal is correctly fitted and clamped when the retaining screw is tightened: *this is essential in providing IP67 protection.*

4. *Ensure that the hydraulic system will not cause any erratic movement of actuators, then:*
   – Switch on power supply again.
   – Repeat LED/function check as in 2.
   An LED malfunction now indicates a short circuit at the load.

5. Successful completion of these checks means that the plug and load are ready for use.

Spare Parts

The only spare part available is the interface seal, part number 732100.

Ordering Procedure

Order plug by full model code, and spare interface seals by part number.