Vickers®

Accessories

Single-Cable UNIPLUG Connector

EHH-AMP-724-A, 1* Series; EHH-AMP-724-C**, 1* Series**
EHH-AMP-724-D, 1* Series; EHH-AMP-724-Z**, 1* Series**

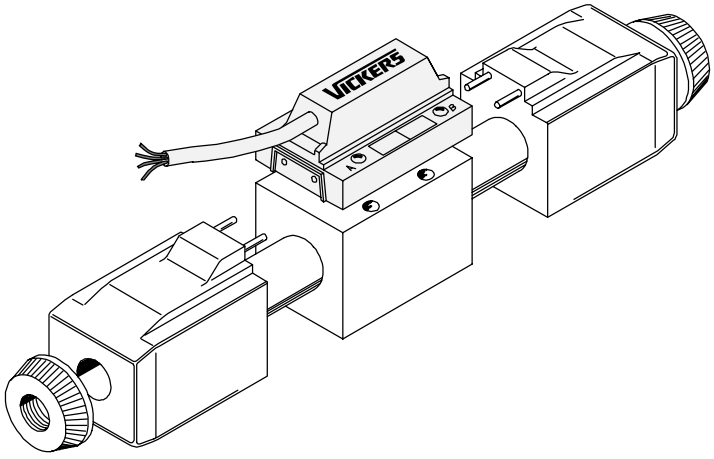

Features and Benefits

- Ideally suited to use within Vickers bus system
- Reduced wiring costs from use of molded-in cable
- Reduced wiring costs from use of only one cable instead of two for double-solenoid valves
- Reduced number of cable entries in control cabinets
- Smaller electrical cabinet
- Robust connector molding
- IP67 protection class for use in difficult environmental conditions

Model Codes

UNIPLUG Connector Only

EHH-AMP-724 * ** - 1*

1 2 3

General Description

Vickers UNIPLUG system consists of a solenoid-operated valve fitted with a single-cable electrical connector ideally suited for economical wiring of single and double-solenoid models. It is suitable for use on Vickers ISO 03-size directional and proportional valves which are fitted with the appropriate plug-in coils.

The UNIPLUG connector is released in four 24V versions, offering:

- Low power switching of 24V DC solenoids
- “Soft switching” of proportional valves
- Control of proportional valves from low voltage differential input signal
- Direct switching of 12V DC or 24V DC solenoids

The correctly installed UNIPLUG/ valve combination conforms to protection code IEC 529 class IP67.

The UNIPLUG connector is supplied loose for customer assembly to valves, *which must be fitted with type “P” plug-in coils*.

1 Function

A = Switching amplifier
C = “Soft switch” amplifier
D = Proportional amplifier
Z = Direct solenoid connection

2 Cable length

15 = 1,5m (approx. 5 ft)
30 = 3,0m (approx. 10 ft)
50 = 5,0m (approx. 16 ft)

3 Design number, 1* series

Subject to change. Installation dimensions unaltered for design numbers 10 to 19.

This product has been designed and tested to meet specific standards outlined in the European Electromagnetic Compatability Directive (EMC) 89/336/EEC, amended by 91/263/EEC and 92/31/EEC. For instructions on installation requirements to achieve effective protection levels, see this leaflet and the Installation Wiring Practices for Vickers Electronic Products leaflet 2468. Wiring practices relative to this Directive are indicated by ⚠ Electro Magnetic Compatibility (EMC)

Valves with UNIPLUG

Vickers UNIPLUG is suitable for use with the following valve types. The highlighted features in the model codes are specific to, and essential for, correct identification of valves suitable for use with UNIPLUG.

Valve type	Switching	Proportional (types C and D)
Directional controls, double solenoid	**(types A and Z)** DG4V-3-***(L)-**-(V)M-**P-H7**-60-**EN96** DG4V-3S-***(L)-**-(V)M-**P-H5**-60-**EN96** **(type Z only)** DG4V-3-***(L)-**-(V)M-**P-G7**-60-**EN96** DG4V-3S-***(L)-**-(V)M-**P-G5**-60-**EN96**	KDG4V-3-**C***-*-(V)M-**P-H7**-60-**EN47** KDG4V-3S-**C***-*-(V)M-**P-H5**-60-**EN47** KDG5V-*-**C***-*-(V)M-**P-H1**-10-**EN47**
Directional controls, single solenoid	**(types A and Z)** DG4V-3-***(L)-**-(V)M-**P-H7**-60-**EN95** DG4V-3S-***(L)-**-(V)M-**P-H5**-60-**EN95** **(type Z only)** DG4V-3-***(L)-**-(V)M-**P-G7**-60-**EN95** DG4V-3S-***(L)-**-(V)M-**P-G5**-60-**EN95**	KTG4V-3-**B***-*-(V)M-**P-H7**-60-**EN46** KTG4V-3S-**B***-*-(V)M-**P-H5**-60-**EN46**
Pressure controls		KCG-3-***D-Z-M-**P-H1**-10-**EN46** KCG-6-W***-Z-M-**P-H1**-10-**EN46** KCG-8-W***-Z-M-**P-H1**-10-**EN46** KX(C)G-6-W***-3-Z-M-**P-H1**-10-**EN46** KX(C)G-8-W***-3-Z-M-**P-H1**-10-**EN46**

Coil Part Numbers

Model	Voltage	Coil Number
DG4V-3(S) DG4V-3(S)	24V DC (H) 12V DC (G)	865923 865922
All K* valves	24V DC (H)	02-124030

Operating Data

Common to All Types

Cable: wire size cable sheathing cable screening	 1 mm^2 (18 AWG) Polyurethane Types C and D only
Ambient temperature range: operating storage	 –20 to +70°C (–4 to +158°F) –25 to +70°C (–13 to +158°F)
Electromagnetic compatibility (EMC): emission immunity	 EN50081-2 EN50082-2
Protection class	IEC 529, IP67 when correctly assembled and installed on a designated valve type
Housing material	Ultramid A3 HG3

Electrical Data, Type A *(Not suitable for use with proportional valves)*

Plug with integral switching amplifiers for two solenoids.
LEDs show status of output.

Connections (coded to DIN VDE 0293): wire no. 1 wire no. 2 wire no. 3 wire no. 4	 Switching command signal: sol. A Switching command signal: sol. B 0V (power and signal) 24V power supply
Power supply (to VDE 0160) Max. permissible voltage	24V DC. *Voltage range dependent upon valve specification* up to maximum for UNIPLUG only: 20.4V to 30.4V incl. ±10% ripple 36V DC *for less than 100 ms*
Protection	Reverse polarity protected

Switching command signal: Energizing (switch on) max. current min. current minimum signal duration De-energizing (switch off) max. command-current Input resistance	 13V to 30.2V 10 mA 5 mA 10 ms –2V to +6V 2 mA 2.5 kΩ
Output current per solenoid: continuous maximum absolute maximum	 2A 2.1A
Output voltage at 1.6A output current	Typically 1.5V below supply voltage
Max. power consumption incl. one solenoid energized	40W
Maximum switching frequency	5 Hz

Electrical Data, Type C

Plug with proportional amplifiers plus an adjustable ramp to give “soft switching” of two solenoids from a switching input signal. LEDs show status of output.

Connections (coded to DIN VDE 0293): wire no. 1 wire no. 2 wire no. 3 wire no. 4 screen	 Switching command signal: sol. A Switching command signal: sol. B 0V (power and signal) Power supply Connect to a suitable ground point
Power supply (to VDE 0160) Max. permissible voltage	24V DC (20.4V to 30.4V incl. ±10% ripple) 36V DC *for less than 100 ms*
Protection	Reverse polarity protected Short circuit protected
Switching command signal: Energizing (switch on) maximum current minimum current minimum signal duration De-energizing (switch off) maximum current Input resistance	 13V to 30.2V 10 mA 5 mA 0.1 ms –2V to +6V 2 mA 2.5 kΩ
Output current per solenoid: continuous maximum absolute maximum	 1.6A 1.8A
Output voltage at 1.6A output current	Typically 1.5V below supply voltage
Max. power consumption incl. one solenoid energized	35W
Ramp adjustment ▲ range	50 ms to 5 sec
Deadband compensation ▲, independent for each solenoid Trigger level for deadband	0 to 700 mA +/–100 mV
Gain adjustment ▲ range, independent for each solenoid	0.04 to 0.16 A/V
PWM frequency	240 Hz
Installation and start-up guidelines	ML-9144

▲ *Vibration can cause potentiometer setting to change by up to approx. 5%. To avoid this effect, it is recommended to seal the adjusting screws (e.g. Loctite Screwlock 222).*

Electrical Data, Type D
Plug with proportional amplifiers with independent adjustable gain and deadband for each of two solenoid outputs, plus a common adjustable ramp.
LEDs show status of output.

Connections (coded to DIN VDE 0293): wire no. 1 wire no. 2 wire no. 3 wire no. 4 screen	 Positive command signal Negative command signal 0V (power and signal) 24V power supply Connect to a suitable ground point
Power supply (to VDE 0160) Max. permissible voltage	24V DC (20.4V to 30.4V incl. ±10% ripple) 36V DC *for less than 100 ms*
Protection	Reverse polarity protected Short circuit protected
Differential command signal max. command-current Input resistance Protected against overvoltage	–10V to +10V. See “Command Signal” table on next page 1 mA 10 kΩ ±50 volts
Output current per solenoid: rated max.	 1.6A 1.8A
Output voltage at 1.6A output current	Typically 1.5V below supply voltage
Max. power consumption with one solenoid energized	35W
Ramp adjustment ■ range	50 ms to 5 sec
Deadband compensation ■, independent for each solenoid Trigger level for deadband	0 to 700 mA +/– 100 mV
Gain adjustment ■ range, independent for each solenoid	0.04 to 0.16 A/V
PWM frequency	240 Hz
Installation and start-up guidelines	ML-9144

■ *Vibration can cause potentiometer setting to change by up to approx. 5%. To avoid this effect, it is recommended to seal the adjusting screws (e.g. Loctite Screwlock 222).*

Electrical Data, Type Z *(Not suitable for use with proportional valves)*
Plug for direct connection to solenoids of switching valves (no integral amplifier).
LEDs show status of power to solenoids.

Connections (coded to DIN VDE 0293): wire no. 1 wire no. 2 wire no. 3	 Power supply, sol. A Power supply, sol. B Power 0V
Power supply (to VDE 0160) Max. permissible voltage	24V DC. (Range 20.4 to 30.4) for Coil R > 18 Ohm 12V DC. (Range 10.0 to 16.0) for Coil R > 4.5 Ohm 36V /18V DC *for less than 100 ms*
Protection	Reverse polarity protected Protection network for inductive load protects switch from high voltages, and speeds de-energizing of solenoid
Max. power consumption with one solenoid energized	40W
Output current per solenoid: continuous maximum absolute maximum	 4A 4.5A
Maximum switching frequency	5 Hz

Electrical Block Diagrams

EHH-AMP-724-**A****-1*

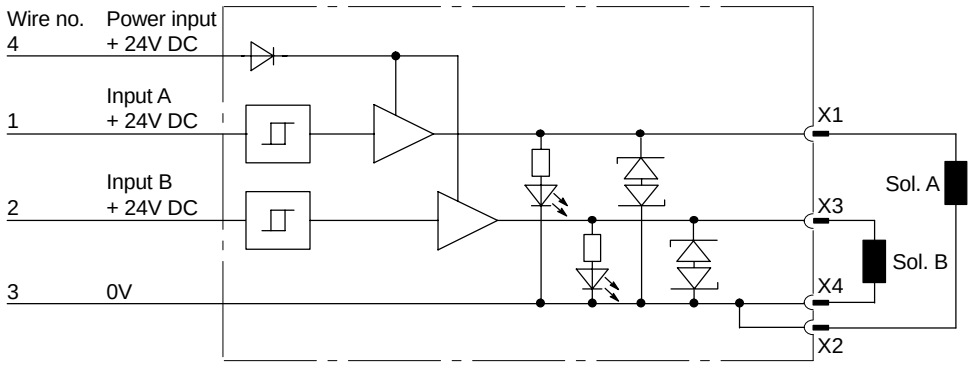

EHH-AMP-724-**C****-1*

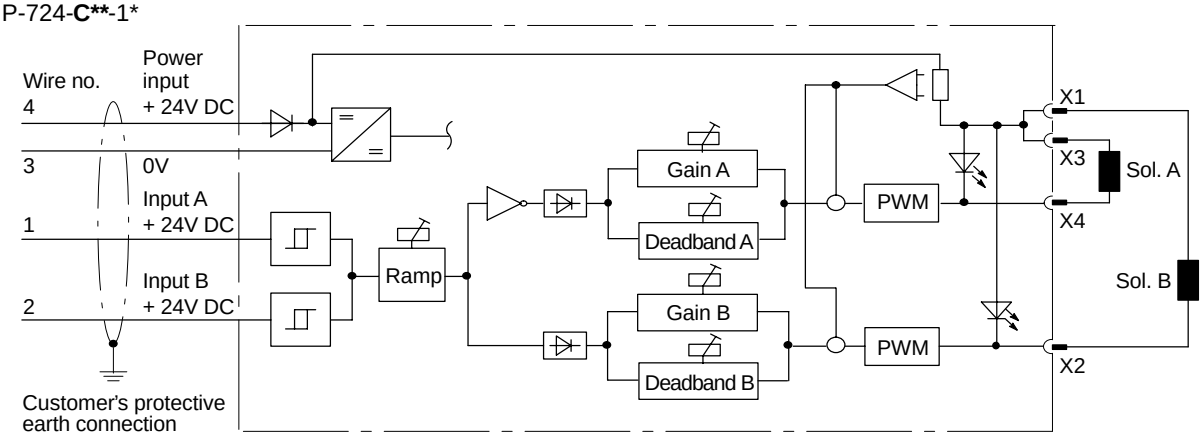

EHH-AMP-724-**D****-1*

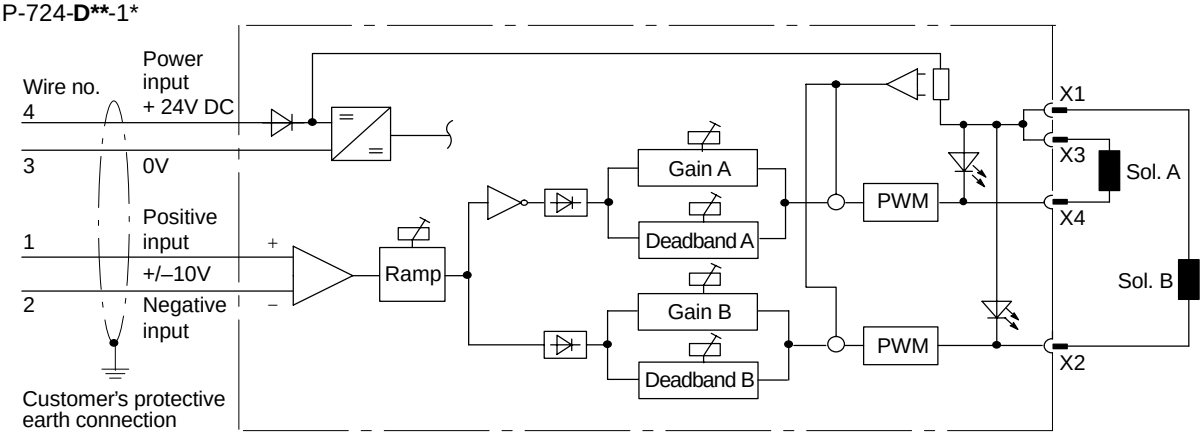

WARNING: *Electromagnetic Compatibility (EMC)*
It is necessary to ensure that the valve is wired up in accordance with the connection arrangements shown in this leaflet. For effective protection, the user's electrical cabinet, the valve subplate or manifold and the cable screens should be connected to efficient ground points.
*In all cases, both valve and cable should be kept as far away as possible from any source of electromagnetic radiation such as cables carrying heavy current, relays and certain kinds of portable radio transmitters, etc. Difficult environments could mean that extra screening may be necessary to avoid interferance***.**

Command Signal Polarity Options
Type D only

Wire 1	Wire 2	Output
+	–	A
+	0	A
0	–	A
–	+	B

0	+	B
–	0	B

EHH-AMP-724-**Z****-1*

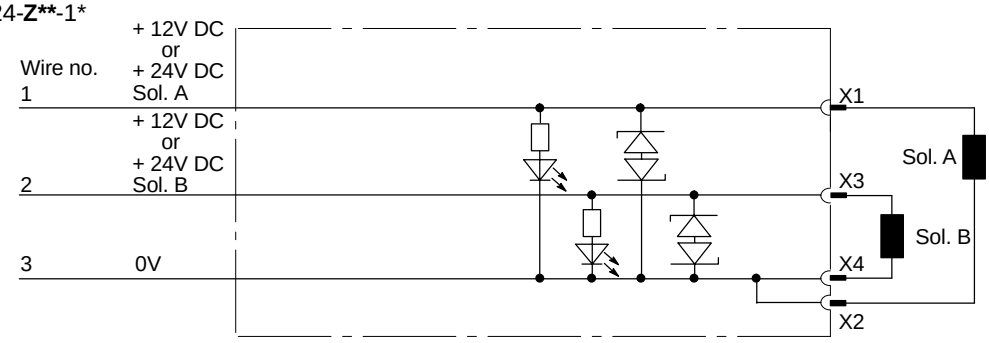

Identification Symbols on Valve Labels

EHH-AMP-724-**A****-1*

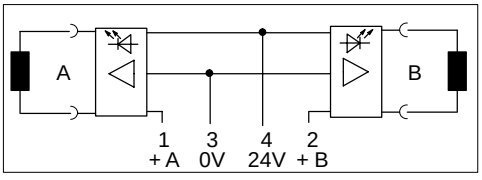

EHH-AMP-724-**D****-1*

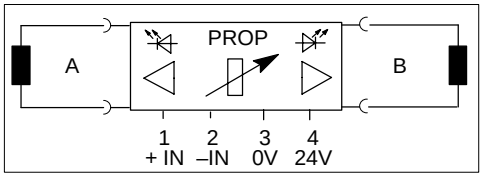

EHH-AMP-724-**C****-1*

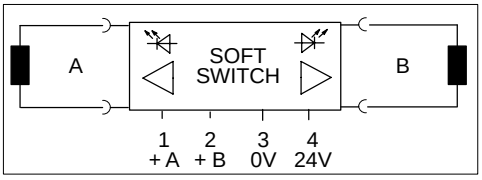

EHH-AMP-724-**Z****-1*

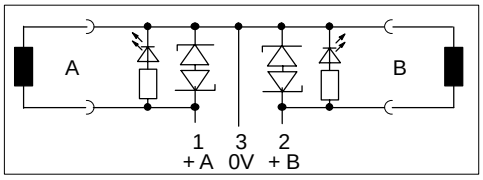

UNIPLUG Installed on Typical Valves

Double solenoid models

DG4V-3-*C/N, 60 design: 200,0 (7.87)
KDG4V-3, 60 design: 238,0 (9.37)

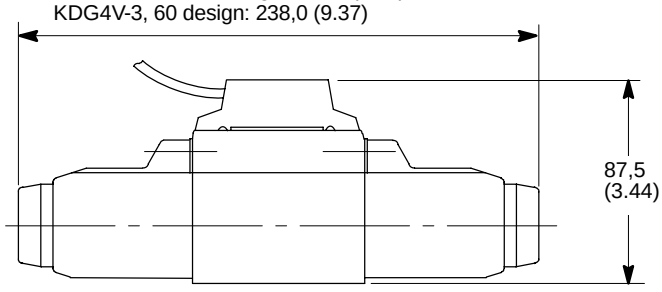

Single solenoid models

DG4V-3-*A/B(L), 60 design: 156,0 (6.14)
KTG4V-3, 60 design and KCG-3, 10 design: 164,0 (6.46)

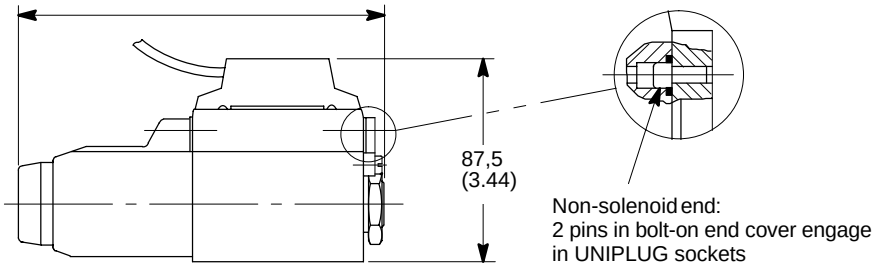

Installation Dimensions in mm (inches)

All Models

3rd angle projection

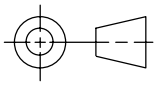

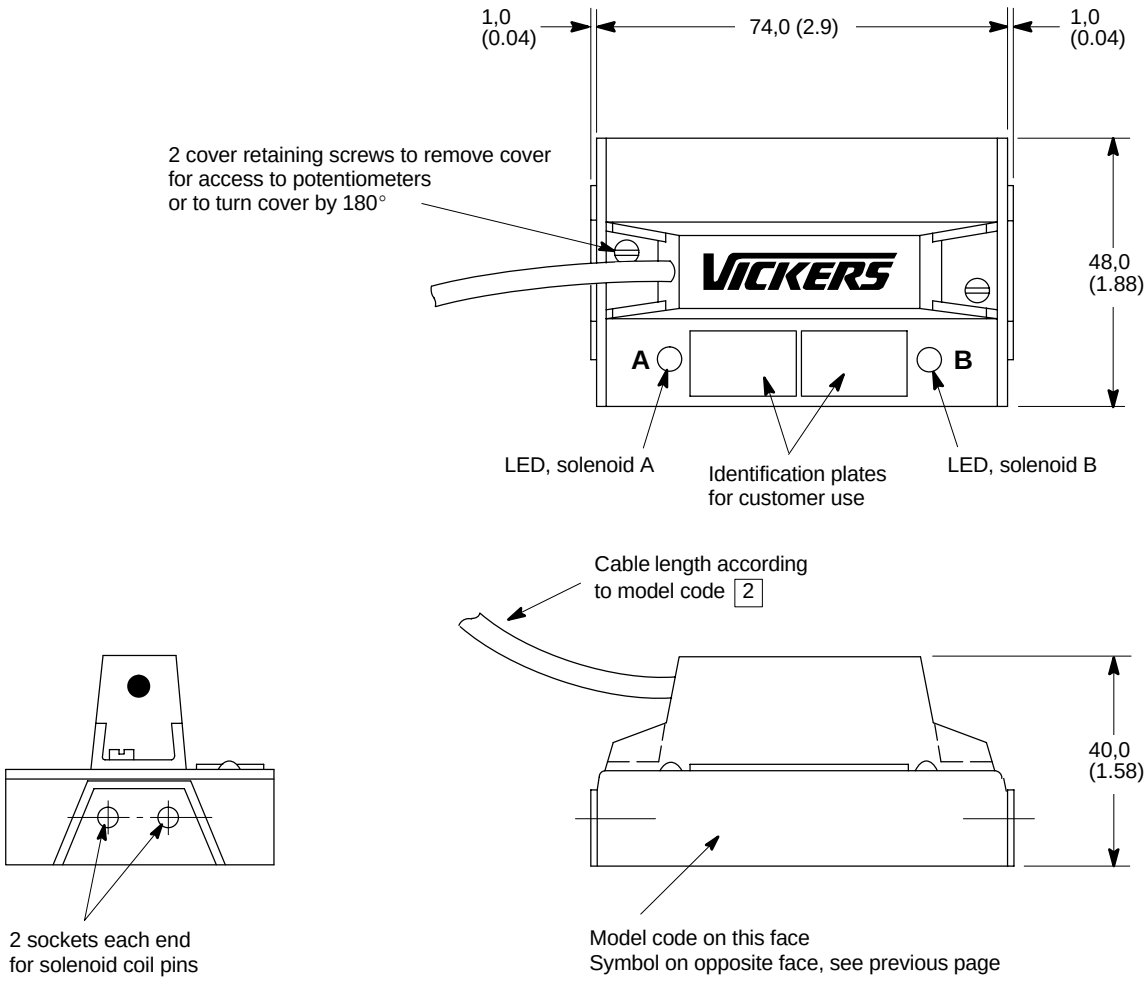

Types C and D
Shown with cover removed for access to potentiometers
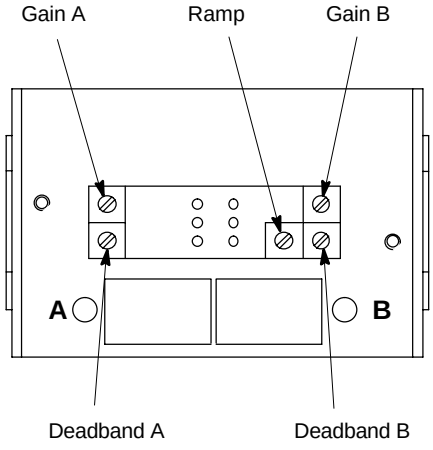
Potentiometer Adjustments
Ramp: Turn clockwise to increase ramp time
Deadband: Turn clockwise to increase deadband compensation
Gain: Turn clockwise to increase gain