Power Amplifier

Type EEA-PAM-513-A; 14 Design
For KCG-3, 10 Series Proportional Pressure Control Valves

General Description

The power amplifier has five voltage inputs (one inverting) and a current input for 0-20 mA. The “set minimum” and “gain” adjustments allow the amplifier to be easily tuned to the proportional pressure control valve. The ramp potentiometer on the front panel simultaneously adjusts the output acceleration and deceleration. The ramp function is normally enabled; it can be permanently disabled by an external wire link, or selectively enabled/disabled using a remotely located switch.

Monitor points on the front panel allow measurement of the conditioned command input signal (after set minimum, gain and ramp functions) and of the solenoid current. The latter is scaled to give 1 volt per ampere.

Features

- User-friendly front panel with all the necessary adjustments, LEDs and monitor points
- Electronic overload protection with automatic reset
- Pulse width modulation for high efficiency
- Ramp function generator for control of pressure increase and decrease rates
- 24V DC power supply
- Either current or voltage input signals
- Standard input and output signals

New 14-design Features

- Wider supply voltage range plus increased tolerance to ripple
- Low supply voltage protection
- Additional monitor points on edge connector

Gain re-positioned in circuitry to give:

- Ramp setting unaffected by gain adjustment
- Constant trigger voltage for deadband compensation

Front Panel

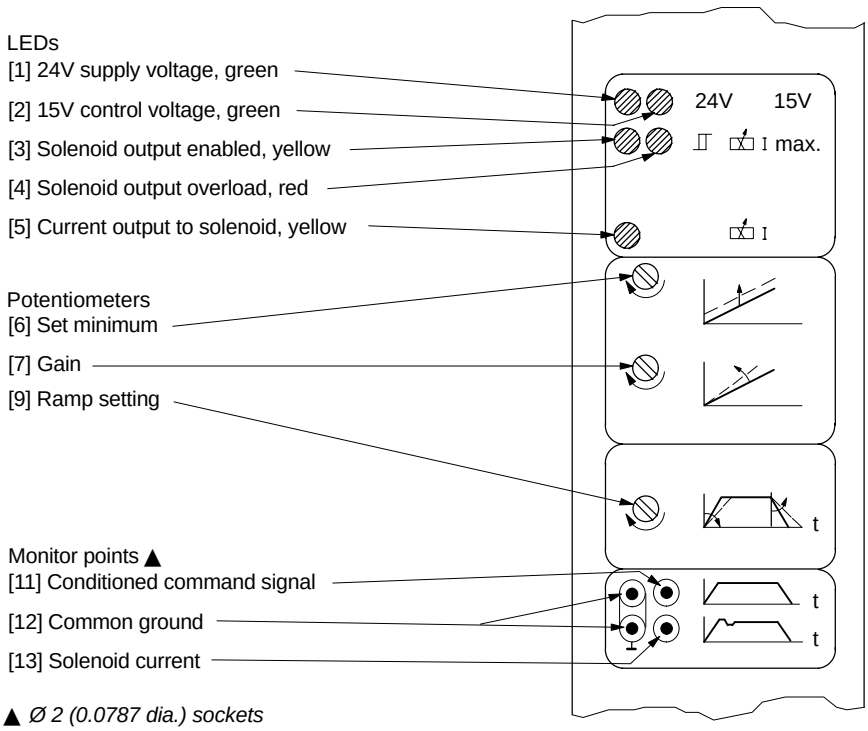

▲ *Ø 2 (0.0787 dia.) sockets*

Warning: *Electromagnetic Compatibility (EMC)*
The European Community directives for electromagnetic comptibility (EMC) do not apply to this product

Operating Data

Power requirements	24V DC nominal x 40W Maximum voltage range: 20 - 34V (including ripple) <4V. pk.-to-pk. ripple Reverse polarity proitected Amplifier shuts down below 19V
Output voltages for control z22 z2 and b2	+15V x 50 mA; ripple <50 mV pk-to-pk ±10V (±1%) x 5 mA
Command signal inputs Voltage inputs: Direct-voltage pins b8, b6, z8, b10 Inverting-voltage pin z10 Voltage range Input impedance Current input: Current pin z6 Current range Input impedance	 0 to 10V 47 kΩ 0 to 20 mA 100Ω
Power drive, pulse-width modulated (PWM): Maximum solenoid current	 1,8A, short-circuit protected
Dither	Factory-set
Set minimum pressure control: Factory setting Adjustment	 Zero solenoid current 0 to 1,0A solenoid current
Gain control: Factory setting Adjustment	 Max. pressure at 10V command signal 0,06 A/V to 0,18 A/V
Ramp time adjustment: Factory setting One adjustment for increasing and decreasing pressure	 Minimum (20 ms approx.) 20 ms to 2s with “set minimum” at zero
Overload detection, factory set	Automatic reset when fault removed
Drive enable/disable: z24 Enable (power available to solenoid) Disable (no power to solenoid)	 +10V to +30V (>6 kΩ) Open circuit or up to 0,8V to z24
Ramps enable/disable: b12, b20 Enable (valve switching rate limited by ramp potentiometer) Disable (fastest valve switching; ramp circuit bypassed)	 Open circuit between b20 and b12 Connect b20 to b12
Command signal monitor points: front panel and b18 Output impedance	 0 to 10V full scale. Command signal conditioned by “set minimum”, gain and ramp function settings. 10 kΩ; short-circuit protected
Solenoid current monitor points: front panel and z18 Output impedance	 1 V/A solenoid current 10 kΩ; short-circuit protected
Drive output status indicator: z12 Drive enabled Drive disabled	 >+6V <–6V

Continued on next page

Ambient temperature range	0 to 50°C (32 to 122°F)
Edge connectors	DIN 41612 F48 male type on the board. Mating connector can be F32 or F48 female type.
Mass	200g (0.44 lb)
Installation recommendations leaflet for electronic amplifiers	ML-9046
Supporting products: Power unit Portable test equipment Cardholder (F32) Edge connector (F48)	 EHA-PSU-704-A/B-10 EHA-TEQ-700-A-20 Part no. 02-104807 Part no. 508178

Solenoid Connections

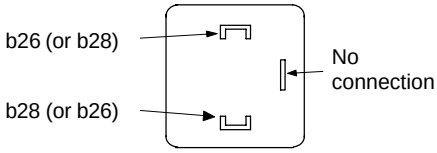

Note: Connections *not* polarity sensitive.

Circuit and Connections

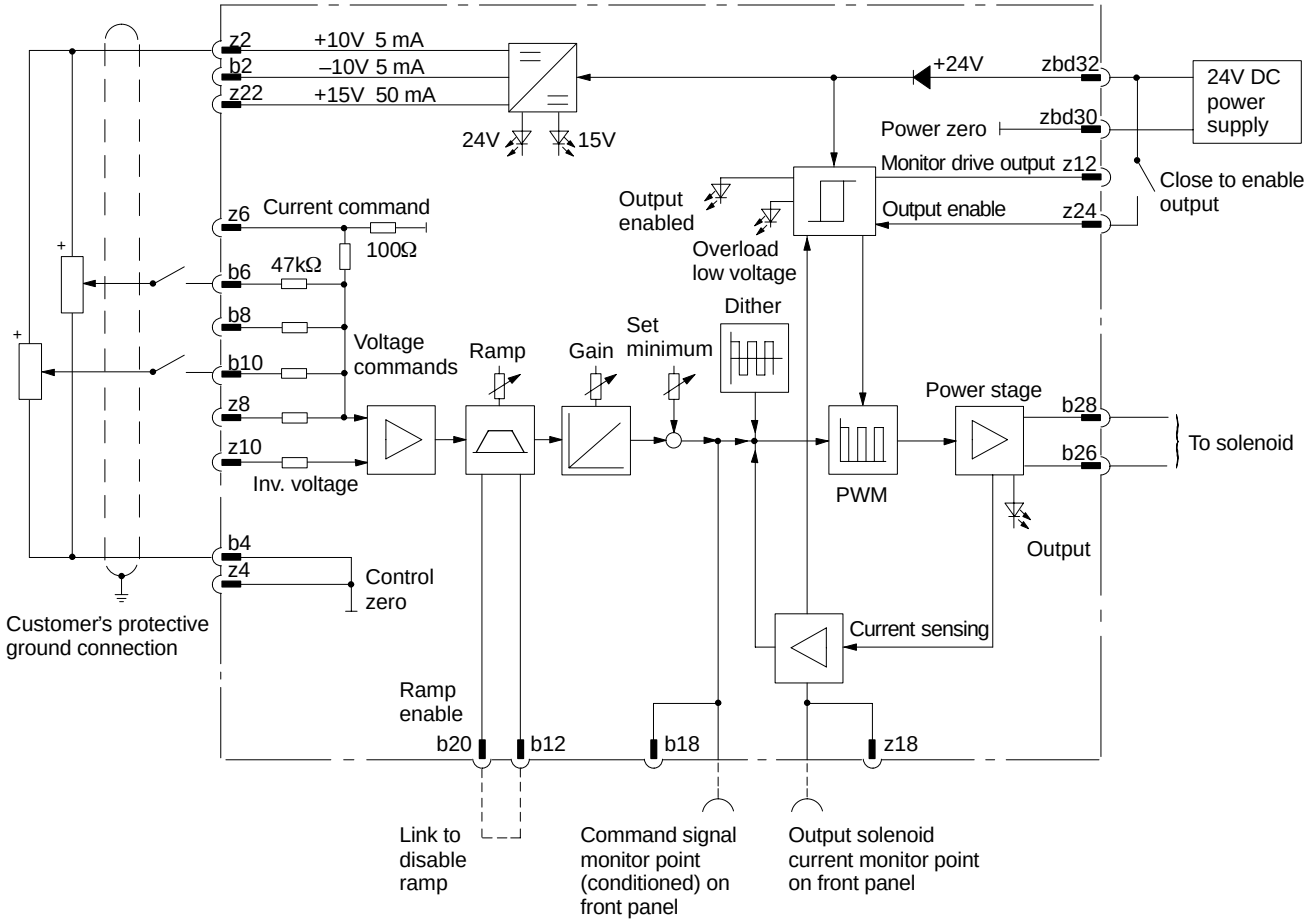

Note: Connect all shields/screens at card end only.

Installation Dimensions in mm (inches)

Plug-in Unit of 3U Height, to IEC 297
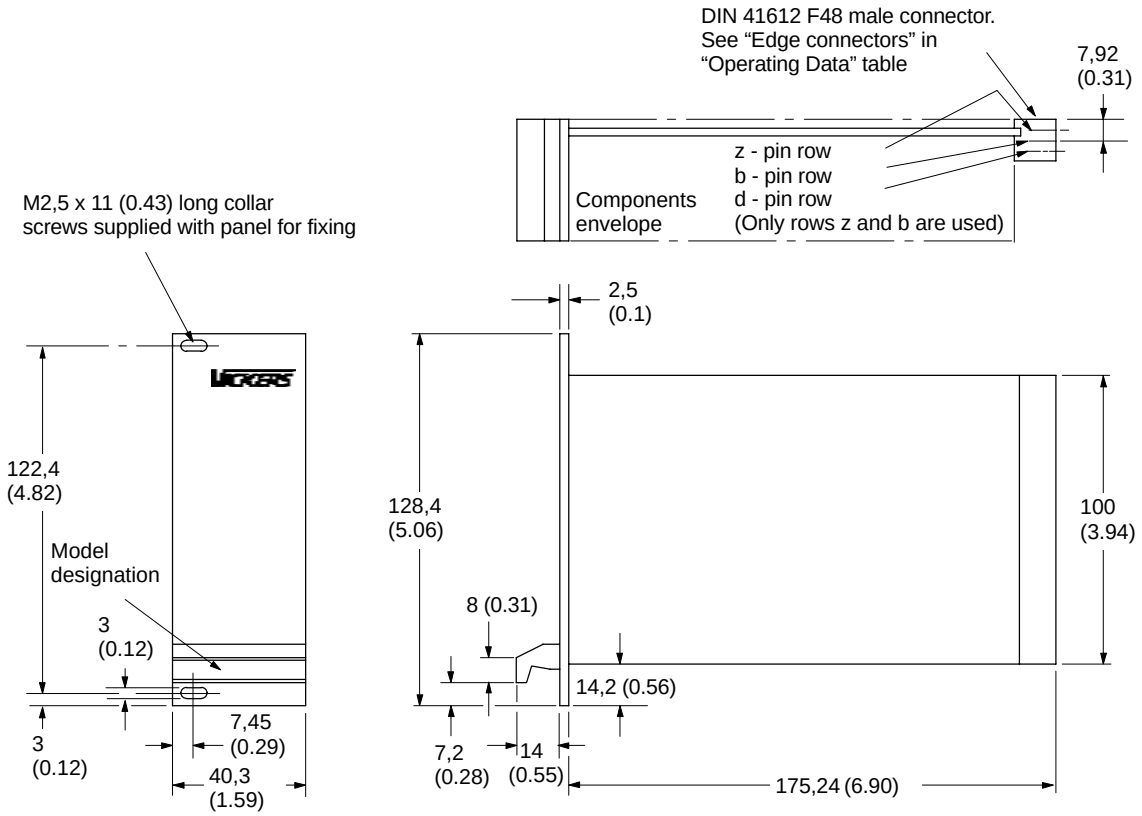
3rd angle projection