Vickers™
Electronics

Demand Signal Generator Module for DIN Rail Mounting

EHD-DSG-201-A-10

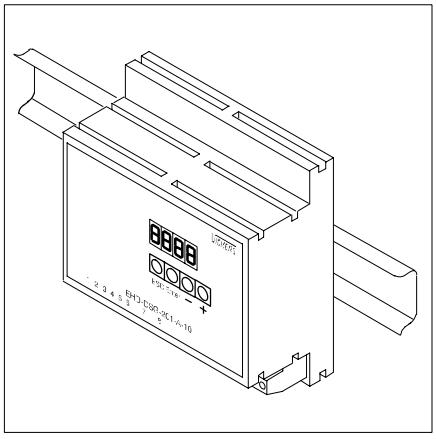

Front Panel

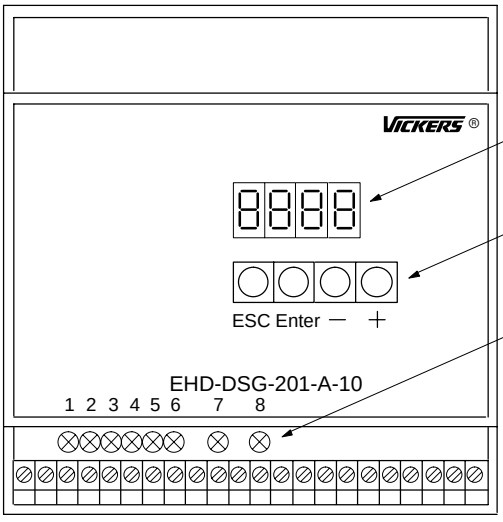

1 3 5 7 9 11 13 15 17 19 21
2 4 6 8 10 12 14 16 18 20 22
Screw terminals

Display

Keys

LEDs:
1. Module enable
2. Setpoint enable
3. Setpoint 1 / Bit 0
4. Setpoint 2 / Bit 1
5. Setpoint 3 / Bit 2
6. Setpoint 4 / Bit 3
7. “OK” output
8. Not used

General Description

This unit is one of a range of “snap-on” control modules designed for cabinet mounting on rails to DIN EN 50022 or DIN EN 50035. The range is ideally suited for use in control systems using Vickers “KA” or “KB” series proportional valves with integral amplifiers or Vickers “UNIPLUG” series, where external signal, deadband compensation and ramp generation may be required.

The Demand Signal Generator module has a built-in microprocessor which controls all of the facilities offered by the unit. Setting up the various control parameters is done via four input keys mounted on the front panel. All settings are stored in an on-board EEPROM and once entered are retained, until reset, even when the power is switched off. Visual indication of all settings is provided by four 7-segment LED displays mounted on the front panel.

Up to 16 separate setpoints can be externally selected using four input connections in binary code. Setpoints 1 and 2 are scalable using 0-10 volt analog inputs. Unit operating status is indicated by seven separate LEDs. The unit also accepts a ±10 volt feedback signal which is compared internally to the command signal and an “in range” signal is generated when they coincide.

Features and Benefits

- Snap-on mounting to DIN rails
- 24V DC power supply with wide tolerance
- Standard ±10V DC output signal
- Screw terminals simplify installation
- 16 selectable output levels
- Keypad on front panel
- 4 x 7-segment LED display
- 4-quadrant ramps
- Ramp times up to 99,99 seconds
- Can replace previous design

This product has been designed and tested to meet specific standards outlined in the European Electromagnetic Compatibility Directive (EMC) 89/336/EEC, amended by 91/263/EEC, 92/31/EEC and 93/68/EEC, article 5. For instructions on installation requirements to achieve effective protection levels, see this leaflet and the Installation Wiring Practices for Vickers Electronic Products leaflet 2468. Wiring practices relevant to this Directive are indicated by ⚠ Electromagnetic Compatibility (EMC).

Operating Data

Power supply:		
Power supply (input)	[2]	24V DC nominal x 6W
Range		18-36V DC (including ±10% pk-to-pk ripple)
Power ground	[1]	
Control supply (output)	[18]	+10V DC x 10 mA Temperature drift <1 mV/°C thru 0-50°C (<0.5 mV/°F thru 32-122°F)
Switched input signals (monitored by green LEDs):		
Enable module	[3]	
Setpoint enable	[4]	
Setpoint 1/Bit 0	[5]	16 possible setpoints in binary mode (4 in DSG mode) Range of outputs –99,99 to +99,99%
Setpoint 2/Bit 1	[6]	
Setpoint 3/Bit 2	[7]	
Setpoint 4/Bit 3	[8]	
Enable voltage		17 to 40V
Disable voltage		0 to 3,5V
Input impedance		2,7 kΩ
Analog input signals:		
Control voltage for setpoint 1	[19]	0 to +10V
Ground	[20]	
Control voltage for setpoint 2	[21]	0 to +10V
Ground	[22]	
Feedback voltage from valve	[16]	± 10V
Input impedance		1 MΩ
Switched output:		
Valve OK signal	[10]	Valve is following input signal correctly (Valve output polarity = command polarity or Valve within set deadband = command at null)
Valve has reached setpoint		V supply –2V
Valve has not reached setpoint		<3V
Ground	[11]	
Not used	[12]	
Ground	[13]	
Maximum load current (short circuit protected)		<100 mA
Analog output:		
Drive voltage to valve	[14]	±10V x 5 mA
Ground	[15]	Temperature drift <1 mV/°C thru 0-50°C (<0.5 mV/°F thru 32-122°F)
Set-up adjustments (using four keys and 7-segment display on front panel):		
Setpoints		–99,9 to +99,9 % (represents –10V to +10V output voltage)
4-quadrant ramps		10 ms to 99,99s
2 deadbands		0 to 100%
Operating modes:		
16 binary inputs for normal operation		BIN
4 inputs simulating previous design		DSG
Setpoint 1 scalable		ON/OFF
Setpoint 2 scalable		ON/OFF
Ramp enable		ON/OFF
Module enable		ON/OFF
Feedback		ON/OFF

Displayed parameters: Power supply voltage [2] Output voltage [14] Control voltage for setpoint 1 [19] Control voltage for setpoint 2 [21] Number of active setpoint Setpoint value Feedback voltage [16] Positive deadband Negative deadband Ramp times (4)	 V V % % 1-16 % % % % Seconds
Connections	Screw clamping terminals
Wiring recommendations, all connections	0,5 to 2,5 mm^2 (22 to12 AWG)
Protection class	IEC 529 IP 20
Vibration: Vickers environmental specification (Class 1 level 2)	 IEC 68-2-6
Electromagnetic compatibility (EMC): Emission Immunity	 EN-50081-2 EN-50082-2
Ambient temperature ranges: Operating Storage	 0°C to 50°C (32°F to 122°F) –25°C to 85°C (–13°F to 180°F)
Mounting	Rails to DIN EN 50022 or DIN EN 50035
Housing material	Polyamid 6.6
Mass	0,3 kg (0.45 lb)

Electrical Block Diagram

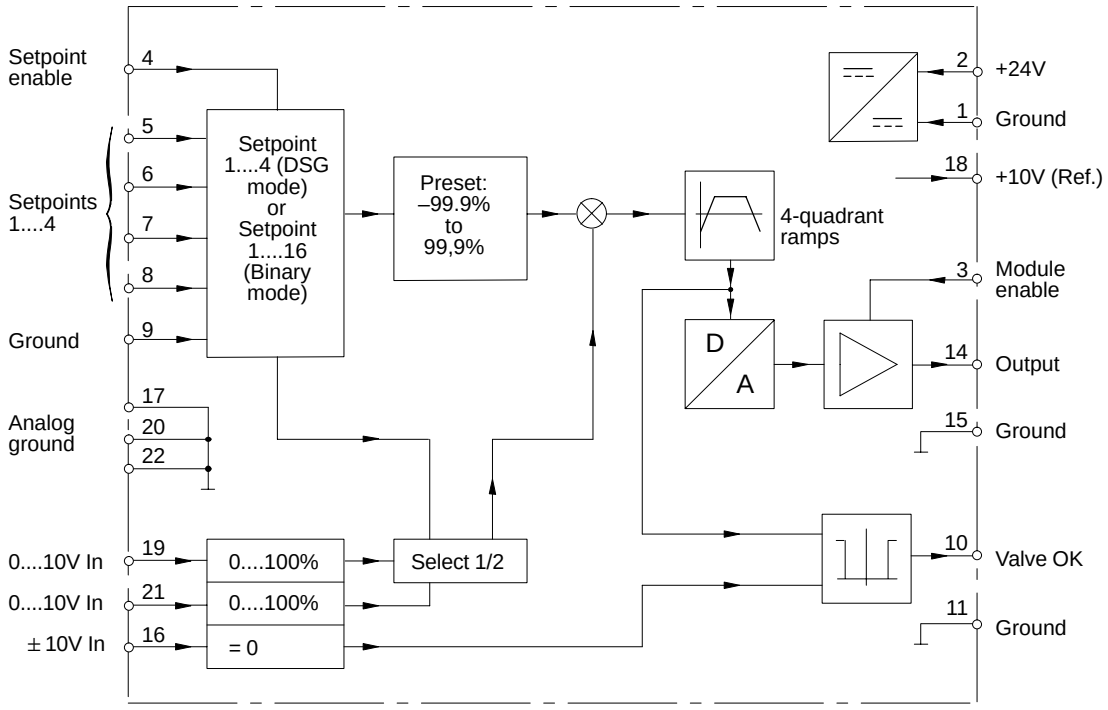

Typical Connection Arrangement

Customer-generated logic signals select
demand levels for valve with integral amplifier

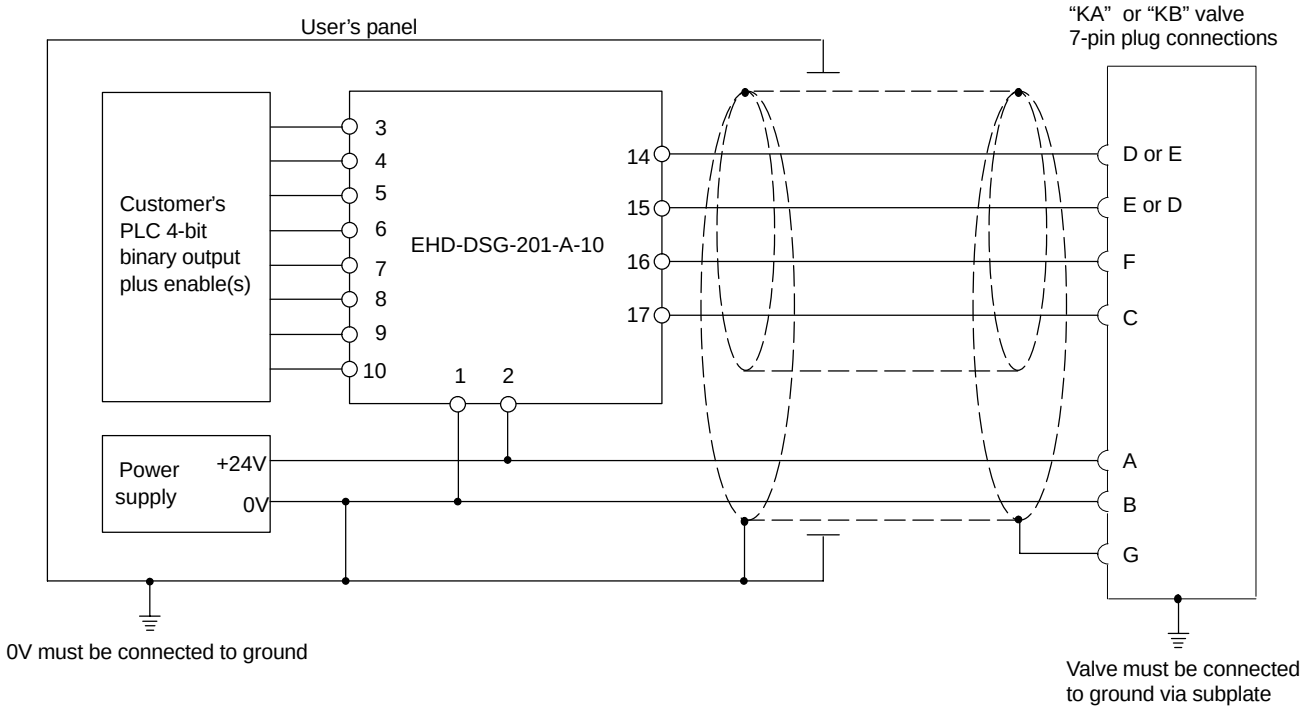

Customer's protective ground connection.

Warning: *Electromagnetic Compatibility (EMC)*

It is necessary to ensure that the unit is wired up in accordance with the Typical Connection Arrangement shown in this leaflet. For effective protection, the user's electrical cabinet, the valve subplate or manifold and the cable screens should be connected to efficient ground points. The metal 7-pin connector part no. 934939 should be used for the integral amplifier.

In all cases, both valve and cable should be kept as far away as possible from any source of electromagnetic radiation such as cables carrying heavy current, relays and certain kinds of portable radio transmitters, etc. Difficult environments could mean that extra screening may be necessary to avoid the interference.

Installation Dimensions in mm (inches)

3rd angle projection

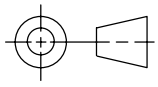

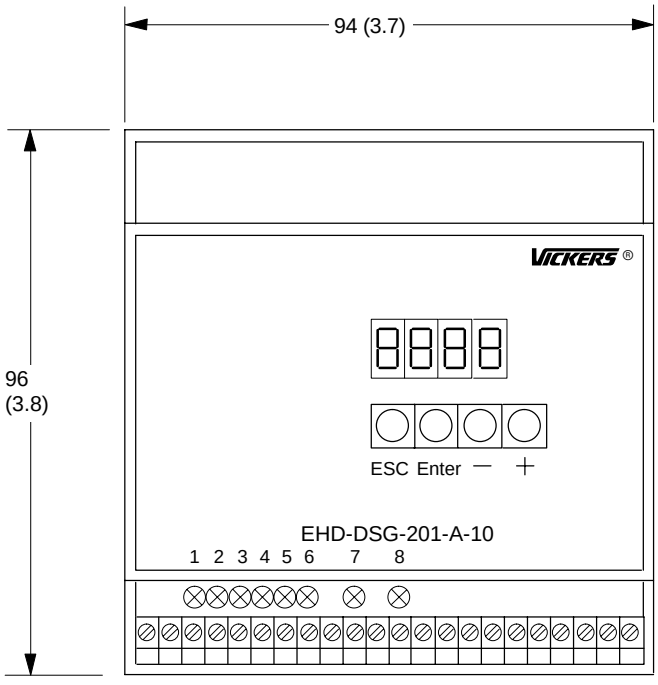

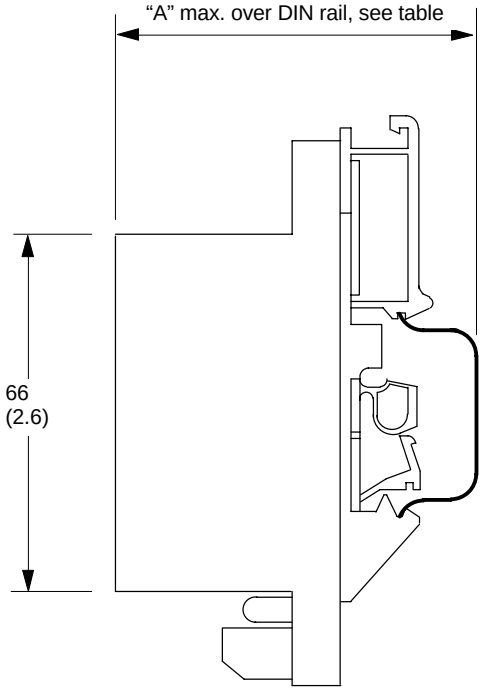

Type	TS1	TS3	TS4/5
A	64,5 (2.6)	60,0 (2.4)	67,5 (2.7)

Vickers Systems Division
TRINOVA Ltd
P.O. Box 4
New Lane, Havant
Hampshire PO9 2NB
England

Trinova do Brazil S.A.
CEP 07250-270
Av. Julia Gaioli, 450
Bonsucesso–Guarulhos
Sao Paulo 07
Brazil

Vickers Systems Ltd
2/F Chiaphua Centre
Yuen Shun Circuit
Siu Lek Yuen, Shatin
N.T. Hong Kong

Vickers, Incorporated
5445 Corporate Drive
P.O. Box 302
Troy, Michigan
48007-0302
USA

The right to modification for technical improvement is reserved

© Vickers Systems 1996 Printed in Europe