Service Data

Vickers®

Valves

CETOP 3 Size Proportional Directional Control Valves

KD/TG4V-3S-*B/C/F(L)--*-(V)M-***(I)-*5-60-(EN**)**

Released 09-01-91

I-3897-S

COIL LETTER	COIL S/A F MODELS	COIL S/A U MODELS	COIL S/A SP2 MODELS
G	02–134567	02–134569	02–140386
GP	508172	507847	02–111166
H	02–134568	02–134570	02–140387
HA	508173	507848	02–111168

Note

For satisfactory service life of these components, use full flow filtration to provide fluid which meets ISO cleanliness code 16/13 or cleaner. Selections from pressure, return, and in-line filter series are recommended.

★ Available in spool accessory kit (see table)
● Available in seal kit 858996 only
□ Available in mounting kit 893236 only
■ Available in qty's. of 25 or more only
◆ Not available for sale
⁘ Torque 4.4–6.2 lb. in.(0,5–0,7 Nm)
⁘ Torque 18–25 lbf. in.(2,3–2,8 Nm)
⁘ Torque 22–27 lbf. ft.(30–36 Nm)
† Torque 21–26 lbf. in.(2,5–3,0 Nm)

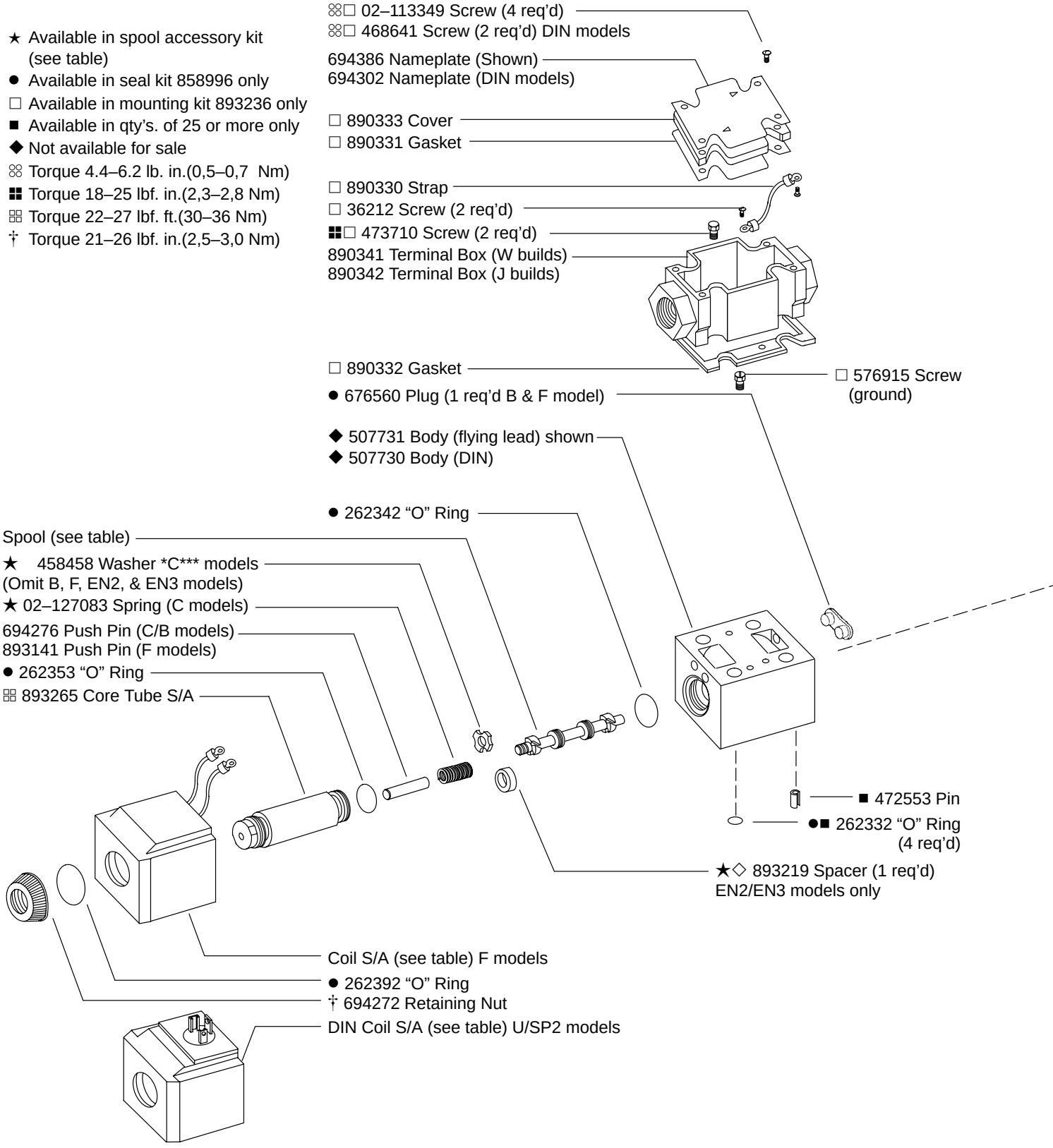

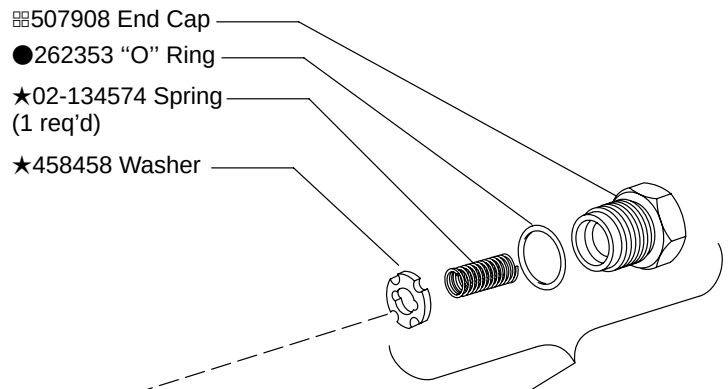

Note
See service drawing I-3886-S for options not shown.

Spool Notes

☆Assemble type 2C15S-EN4 spool with long land over 'A' port.
◇Assemble spacer 893219 on 'A' port end for 3C15N-EN2 spool and on 'B' port end for 131C15N-EN3 spool. Assemble spool with notched land over 'A' port for both EN2 and EN3 models.
♠Assemble spool with long land over 'B' port.
◐Assemble spool with long land over 'A' port.

Note
KTG4V-3S-*B(L)**-(V)M-FW-60
Spring Centered, Solenoid 'A' removed
Refer to other end of valve for common part numbers except as noted.

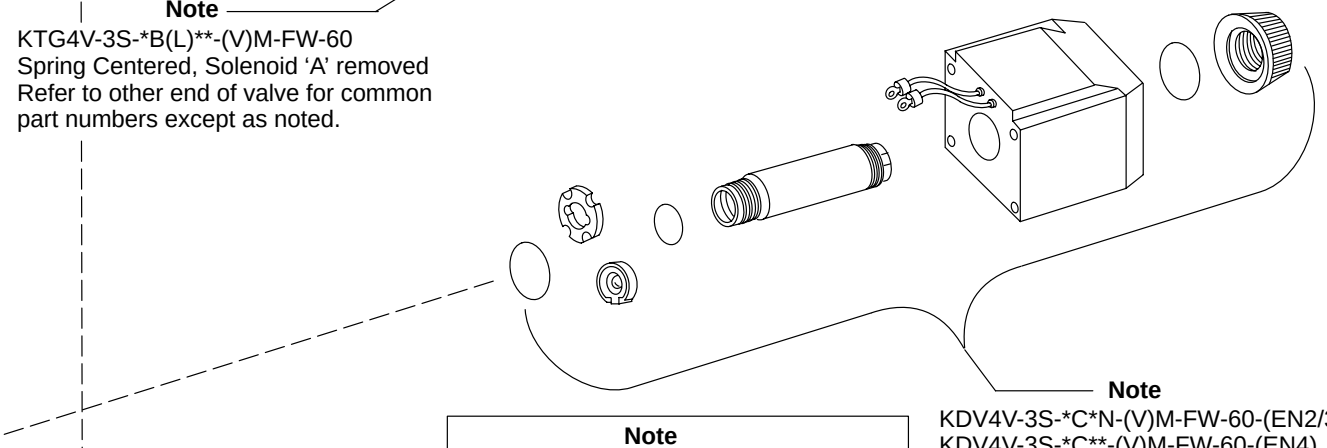

Note
KDV4V-3S-*C*N-(V)M-FW-60-(EN2/3)
KDV4V-3S-*C**-(V)M-FW-60-(EN4)
Spring Centered, Dual Solenoid
Refer to other end of valve for common part numbers except as noted.

Note
Right hand assembly shown, for left hand assembly all parts reversed except body.

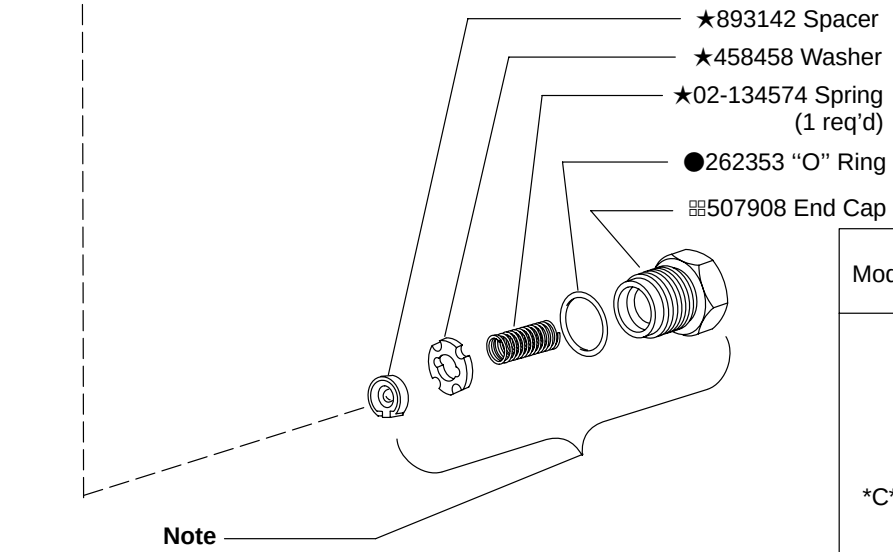

Note
KTG4V-3S-*F(L)**-(V)M-FW-60
Spring Offset to Cyl. 'A', shift to center
Refer to other end of valve for common part numbers except as noted.

Model	Spool	Type	Spool Accessory Kit
*C***	893131	2C19S	697373
	893132	2C19N	
	893127	2C08S	
	893128	2C08N	
	893129	2C15S	
	893130	2C15N	
	893138	33C08A	
	893139	33C15A	
	893220	33C22A	
	893134	☆2C15S-EN4	
	893133	◇3C15N-EN2	697376
	893133	◇131C15N-EN3	
*B**N	893137	♠2*19N	697374
	893136	♠2*08N	
	893221	♠2*15N	
*F**N	893137	◐2*19N	697375
	893136	◐2*08N	
	893221	◐2*15N	

Model Code

K*G4V - 3 S - * * (L) * * - * (V) M - * * * (I) - * 5 - 60 (EN)**

1 2 3 4 5 6 7 8 9 10 11 12 13 14 15 16 17 18 19

1 Model Series

K- Proportional
D- Directional control valve
T- Throttle valve
G- Subplate mounted
4- Solenoid operated
V- 350 bar (5000 psi) @ P, A & B ports

2 Interface

3- ISO-4401-03 CETOP 3 (NFPA D03)

3 Standard Performance

S- Standard performance

4 Spool Type

(See table)

5 Spool/Spring Arrangement

B- Spring centered, sol. 'A' removed
C- Spring centered, dual solenoid
F- Spring offset to cyl. 'A', shift to center

6 Build Type

L- Left hand build single solenoid models only
Blank- Standard right hand build

7 Spool Flow Rating
(@10 bar (150 psi) pressure drop

08- 8 L/min (2 USgpm)
15- 15 L/min (4 USgpm)
19- 19 L/min (5 USgpm)

8 Metering Condition

S- Meter-out (only)
A- Meter-in (only)
N- Meter-in and Meter-out

9 Manual Override Options

Blank- Plain override solenoid ends only
H- Waterproof override solenoid end only
P2- Plain override both ends of single solenoid models

10 Solenoid Identification
(Models with EN2, EN3 or EN4 require V in model code for reverse solenoid identification.)

11 Flag

Electrical options & features (refer to service drawing I-3886-S).

12 Coil Type

F- Flying lead
U- DIN 43650
SP1- Single 6.3 mm series spade to IEC 760 (Direct D.C. models only)
SP2- Dual 6.3 mm series spade to IEC 760 (Direct D.C. models only)

13 Electrical Connections (F type coils only)
Omit if not required.

T- Wired terminal block
PA- Instaplug male receptacle only
PB- Instaplug male & female receptacle
PA3- Three pin connector
PA5- Five pin connector

14 Housing (F type coils only)

W- 1/2 NPT thread wiring housing
J- 20 mm thread wiring housing

15 Electrical Options
Omit when not required.

I- ISO 4400 with fitted plug (U models only)

16 Coil Identification Letter

(See table)

17 Tank Pressure Rating

5- 100 bar (1500 psi)

18 Design

19 Special Modifications
Omit if not required.

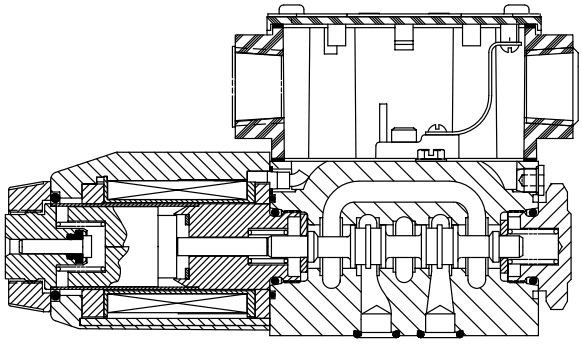

Typical sectional view, KTG4V-3S-*F(L)**-(V)M-FW-*5-60 Spring Offset Valve

Printed in U.S.A.