Proportional Directional Valves

Hydraulic Pilot Operated KDG3V-3 and KDG3V-5 Series
ISO 4401-03 and -05 (NFPA D03 and D05) Interfaces

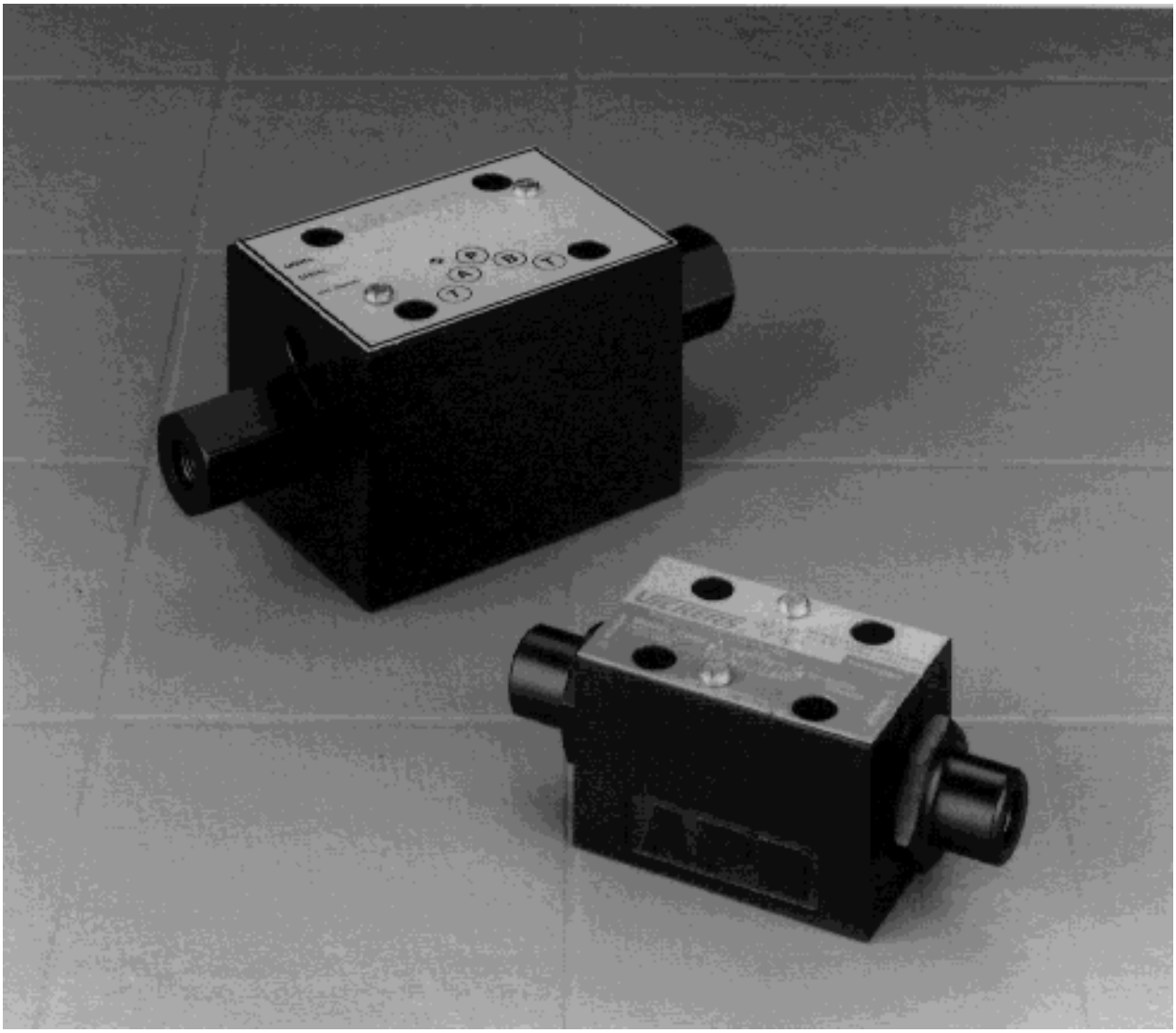

Introduction

Vickers KDG3V-3 and -5 valves are used in open loop hydraulic circuits to direct and meter flow in proportion to pilot pressure commands. The resulting controlled flow is used to determine the direction, velocity and acceleration/deceleration of hydraulic cylinders or motors.

The KDG3V is controlled by applying pilot pressure, through an operator mechanism, to either end of the valve's normally spring-centered spool. The resulting force causes spool travel when it is greater than the opposing spring force.

Optional pressure feedback models have a small pin inside the ends of the spool. Load pressure acts on the area of the pin and opposes the pilot pressure, thus closing the spool. For a given pilot pressure, flow decreases as load pressure increases, until maximum pressure is reached at zero flow. Maximum load pressure can be changed by changing the pilot pressure.

Pressure, actuator and tank port connections are made by mounting the valve on a subplate or manifold. Vickers hydraulic remote controls (catalog GB-MC-2032A) are an ideal means of providing pilot pressure for the KDG3Vs, and ultimately providing precise low-effort control of actuator functions.

Features and Benefits

- KDG3V valves, manufactured to world-class quality standards, are sold and serviced throughout the world.
- Standard ISO 4401-03 and -05 mountings are interchangeable with NFPA D03 and D05 interfaces, respectively.
- Load-pressure feedback option available.
- NFPA fatigue rated at 350 bar (5075 psi) for KDG3V-3, and 315 bar (4568 psi) for KDG3V-5.
- The use of fluorocarbon seals throughout provides multi-fluid capability.

Contents

General Information

Typical Applications 4
Metering 4
Valve Spool Position 4
Pressure Feedback 4
Graphical Symbols 4
Flow Rate 4
Recommended Fluids 4
Mounting 4
Seal Kits 4

KDG3V-3 Model Series

Model Code 5
Ratings and Specifications 5
Performance Curves 6
Installation Dimensions 7
Cross Section Drawing 7

KDG3V-5 Model Series

Model Code 8
Ratings and Specifications 8
Performance Curves 9
Installation Dimensions 10
Cross Section Drawing 10

Subplates & Bolt Kits 11

Fluid Cleanliness 12

General Information

Typical Applications

KDG3V valves are often used in mobile and industrial “line of sight” applications where speed and position are controlled by an operator. Typical applications include aerial work platforms, railway maintenance equipment, and snow groomers.

Metering

The spools of KDG3V valves have metering notches positioned between the pressure port and actuator port, creating a throttle in the hydraulic actuator’s inlet line. These meter-in spools are commonly used with hydrostat modules for pressure compensation in applications having no overrunning load, as well as in load sensing pump circuits. (See catalog GB-C-2007A for information on hydrostat modules.)

Valve Spool Position

The spool will be spring centered until adequate pilot pressure is applied, unless it’s a pressure feedback spool.

NOTE

Due to silting, the spool of any sliding-spool valve may stick and not spring return if held shifted under pressure for long periods. Such valves should be cycled periodically to prevent this from occurring.

Pressure Feedback

Optional pressure feedback models have a small pin inside the ends of the spool. See pressure feedback pin page 7.

Load pressure acts on the area of the pin and opposes the pilot pressure, thus closing the spool. For a given pilot pressure, flow decreases as load pressure increases, until maximum pressure is reached at zero flow. Maximum load pressure can be changed by changing the pilot pressure.

Graphical Symbols

KDG3V-3-2C**A-S-60
KDG3V-5-2C**A-S-10

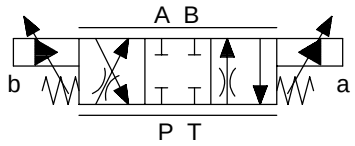

KDG3V-3-33C**A-S-60
KDG3V-5-33C**A-S-10

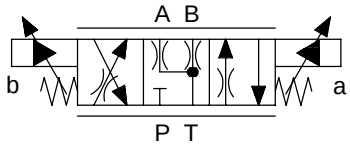

KDG3V-3-33C**A-3-S-60
KDG3V-5-33C**A-4-S-10

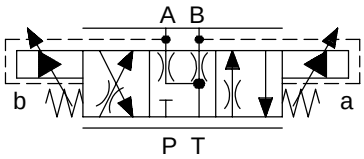

Flow Rates

Flow through the valve depends on spool position and valve pressure differential. As the valve is opened, the rate of flow increases, and if the pressure differential across the valve changes due to load pressure changes, the flow will vary. Therefore, “rated flow” is an arbitrary term, dependent on the above parameters.

The valve exhibits an inherent degree of load compensation whereby increasing valve pressure drop has progressively less effect on flow rate. See power capacity curves page 6.

To eliminate the effects of pressure changes, a hydrostat module can be installed under the valve to achieve pressure compensation. (See catalog GB-C-2007A for information on hydrostat modules.)

Recommended Fluids

Petroleum oils are recommended. Fluorocarbon seals are standard and are suitable for use with phosphate ester fluids or blends, water glycol, water-in-oil emulsion fluids, and petroleum oils. HWBF (95% water) is not recommended.

See back cover for recommended fluid cleanliness levels. See 694 for additional fluid, and temperature, recommendations.

Mounting

The surface to which the valve mounts must be flat within 0,013 mm (.0005 inch) and smooth within 1,1 micrometer (45 microinch). Mounting bolts should be grade 12.9 (SAE grade 7) or better.

Subplates, and bolts for joining valves and subplates, are available. See page 11.

Seal Kits

Replacement seals for KDG3V-3 and -5 valves are available in kits 02-110959 and 02-310114, respectively.

KDG3V-3 Model Series

Model Code

K D G 3 V - 3 - * C * * A - (3) - S - 60

1 2 3 4 5 6 7 8 9 10 11 12 13

1 Valve Type

K – Proportional

2 Valve Function

D – Directional control

3 Mounting

G – Manifold or subplate

4 Operation

3 – Hydraulic pilot operated

5 Pressure Rating

V – 350 bar (5075 psi)

6 Interface

3 – ISO 4401-03 (NFPA D03)

7 Spool Type (center condition)

2 – Closed center (all ports)
33 – Closed center (bleed A and B ports)

8 Spool/Spring Arrangement

C – Spring centered, double operator

9 Flow Rating @ 10 bar (145 psid)

23 – 23 Lpm (6 USgpm)
34 – 34 Lpm (9 USgpm)

10 Metering Configuration

A – Meter-in only

11 Pressure Feedback Option

3 – Feedback (available with type 33 spool only)
Blank – No feedback required

12 Thread for Pilot/Drain Connection

S – SAE internal straight thread

13 Design Number

Subject to change. Installation dimensions remain unchanged for designs 60 through 69.

Ratings and Specifications

Rated Flow	**Maximum Flow**	**Max. Operating Pressure**	**Rated Fatigue Pressure** (Ports A, B & P)	**Maximum Tank Line Pressure**
Per spool type	See curves Page 6	350 bar (5075 psi)	350 bar (5075 psi)	210 bar (3045 psi)

Pilot Pressure	**Hysteresis**	**Repeatability**	**Pilot Pressure Required To Begin Flow** (Cracking Point)	**Approximate Weight** (All Models)
0-17 bar (0-250 psi)	±4 %	±1 %	3,3-6,7 bar (50-100 psi)	1,2 kg (2.5 lbs)

KDG3V-3 Model Series

Flow Gain

At stated valve pressure drop.
Single flow path, P→A or P→B.

KDG3V-3-*C23A-(3)-S-60

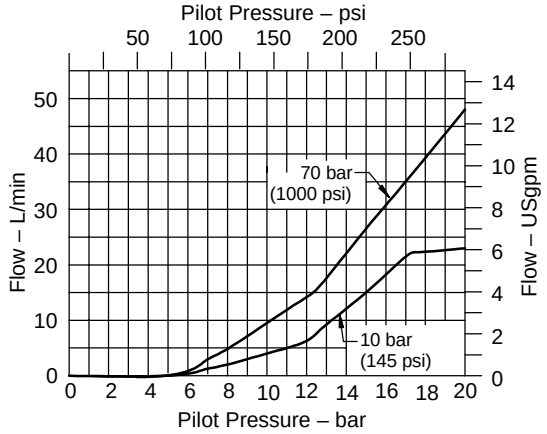

KDG3V-3-*C34A-(3)-S-60

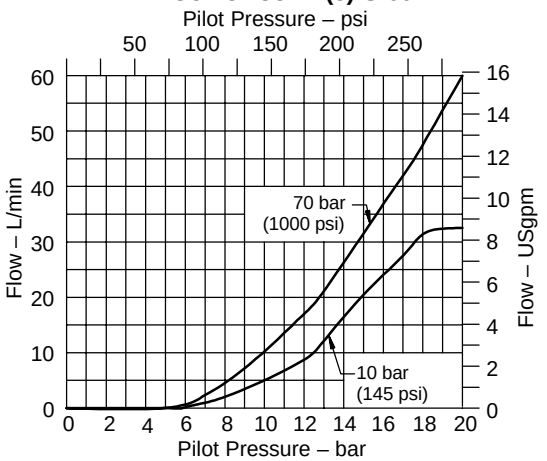

Power Capacity

At rated pilot pressure of 17 (250 psi).
Flow thru P→A or P→B.
Single flow path.

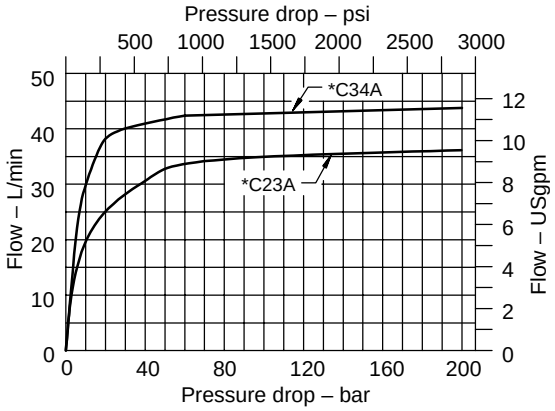

Load Compensation

Pressure feedback for load sense or hydrostat systems.
10 bar (145 psid) constant pressure drop P.
Service at various pilot pressures.

KDG3V-3-33C23A-3-S-60

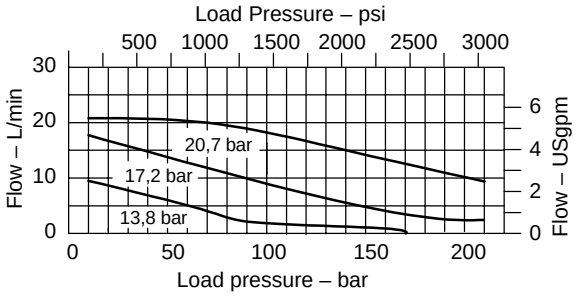

KDG3V-3-33C34A-3-S-60

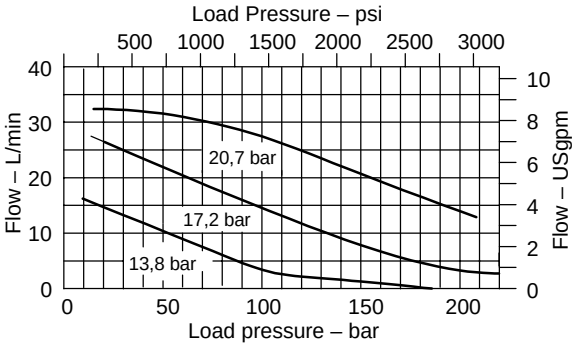

KDG3V-3 Model Series

Installation Dimensions

Millimeters (Inches)

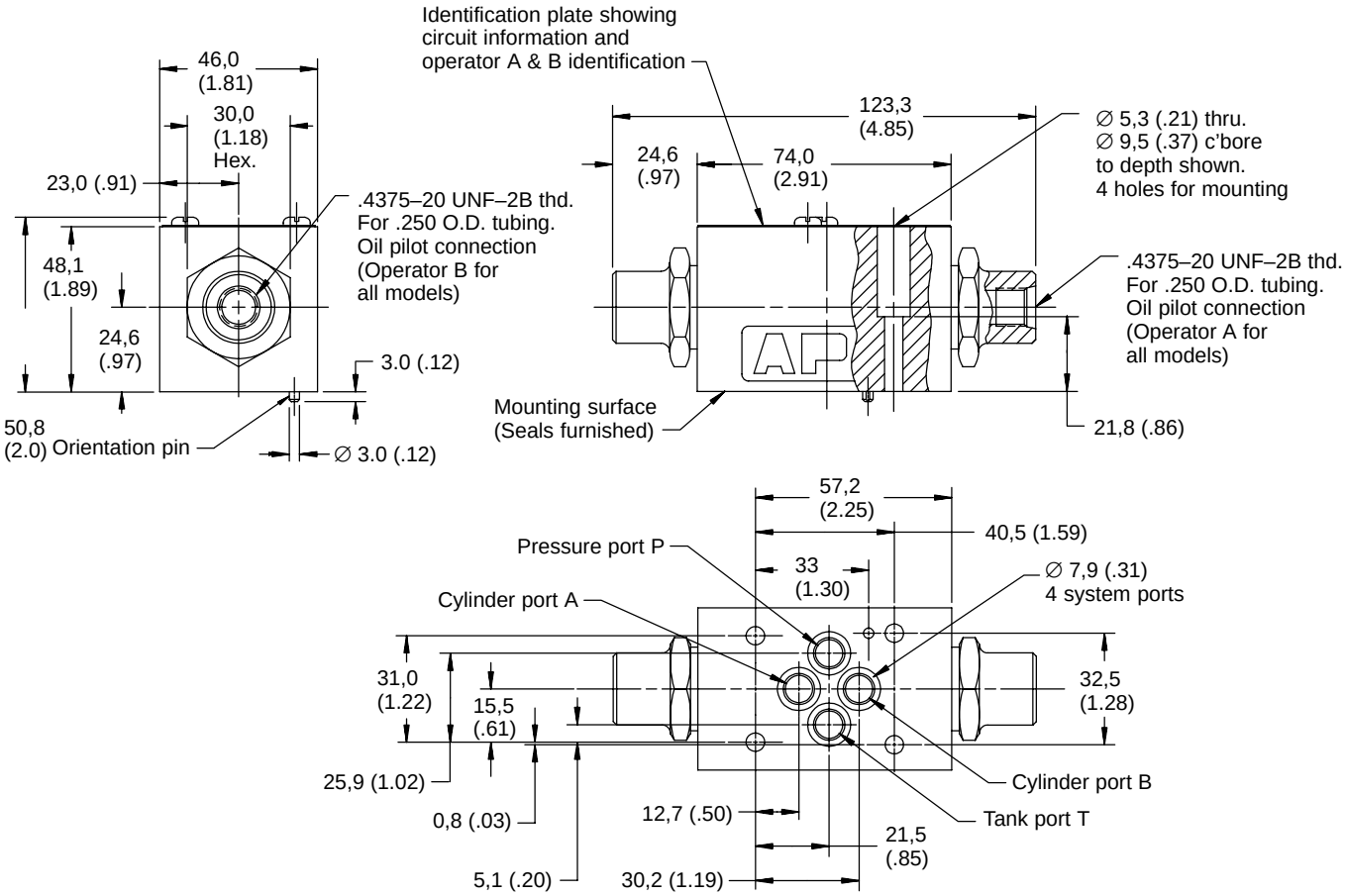

Cross Section of Pressure Feedback Model

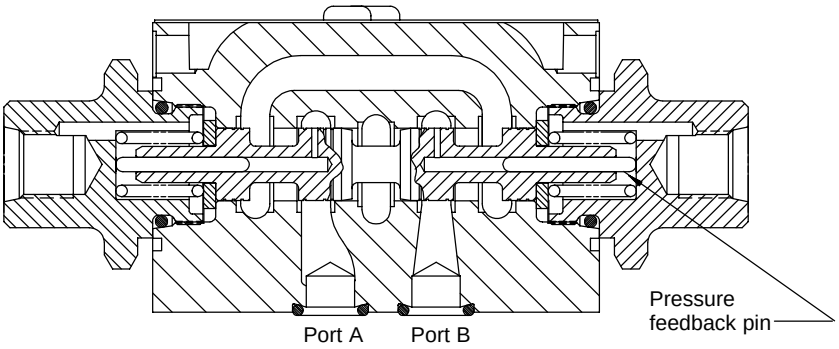

KDG3V-5 Model Series

Model Code

K D G 3 V - 5 - * C * * A - (4) - S - 10

1 2 3 4 5 6 7 8 9 10 11 12 13

1 Valve Type

K – Proportional

2 Valve Function

D – Directional control

3 Mounting

G – Manifold or subplate

4 Operation

3 – Hydraulic pilot operated

5 Pressure Rating

V – 315 bar (4568 psi)

6 Interface

5 – ISO 4401-05 (NFPA D05)

7 Spool Type (center condition)

2 – Closed center (all ports)
33 – Closed center (bleed A and B ports)

8 Spool/Spring Arrangement

C – Spring centered, double operator

9 Flow Rating @ 10 bar (145 psid)

63 – 63 Lpm (17 USgpm)
95 – 95 Lpm (25 USgpm)

10 Metering Configuration

A – Meter-in only

11 Pressure Feedback Option

4 – Feedback (available with type 33 spool only)
Blank – No feedback required

12 Thread for Pilot/Drain Connection

S – SAE internal straight thread

13 Design Number

Subject to change. Installation dimensions remain unchanged for designs 10 through 19.

Ratings and Specifications

Rated Flow	**Maximum Flow**	**Max. Operating Pressure**	**Rated Fatigue Pressure** (Ports A, B & P)	**Maximum Tank Line Pressure**
Per spool type	See curves page 9	315 bar (4568 psi)	315 bar (4568 psi)	70 bar (1015 psi)

Pilot Pressure	**Hysteresis**	**Repeatability**	**Pilot Pressure Required To Begin Flow** (Cracking Point)	**Approximate Weight** (All Models)
0-17 bar (0-250 psi)	±4 %	±1 %	3-7 bar (45-105 psi)	3,3 kg (7,2 lbs)

KDG3V-5 Model Series

Flow Gain

At stated valve pressure drop.
Single flow path, P→A or P→B.

KDG3V-5-*C63A-(4)-S-10

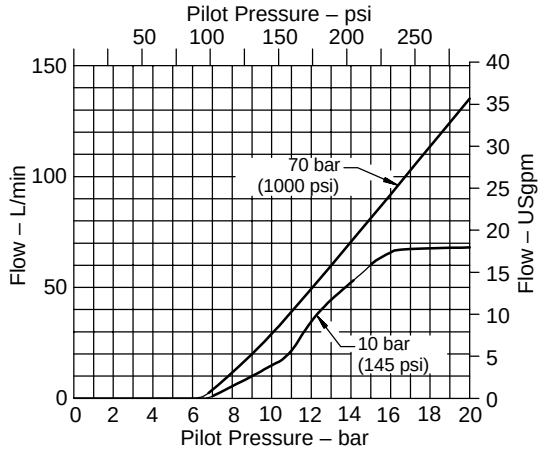

KDG3V-5-*C95A-(4)-S-10

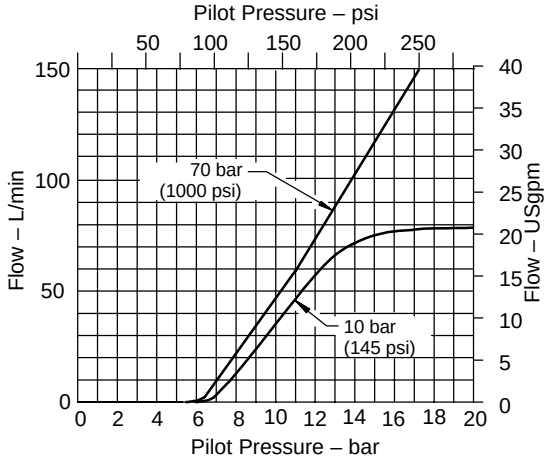

Power Capacity

At rated pilot pressure of 15,5 (225 psi).
Flow thru P→A or P→B.
Single flow path.

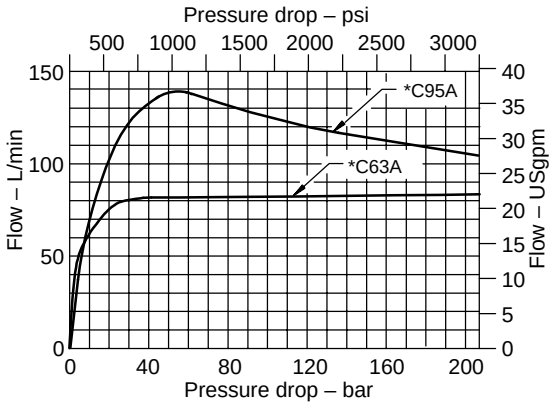

Load Compensation

Pressure feedback for load sense or hydrostat systems.
20 bar (240 psid) constant pressure drop P.
Service at various pilot pressures.

KDG3V-5-33C63A-4-S-10

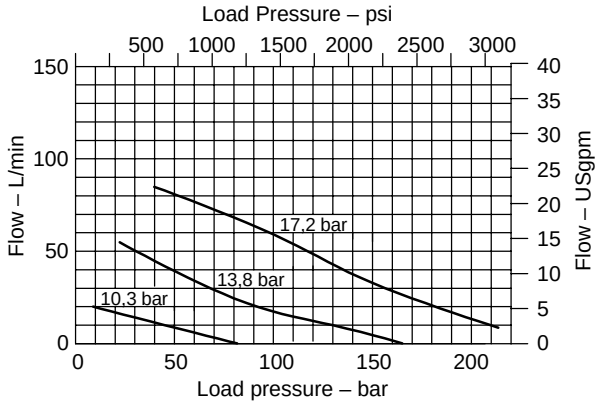

KDG3V-5-33C95A-4-S-10

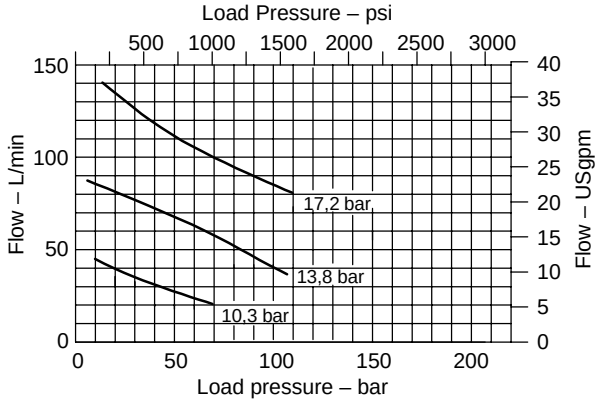

KDG3V-5 Model Series

Installation Dimensions

Millimeters (Inches)

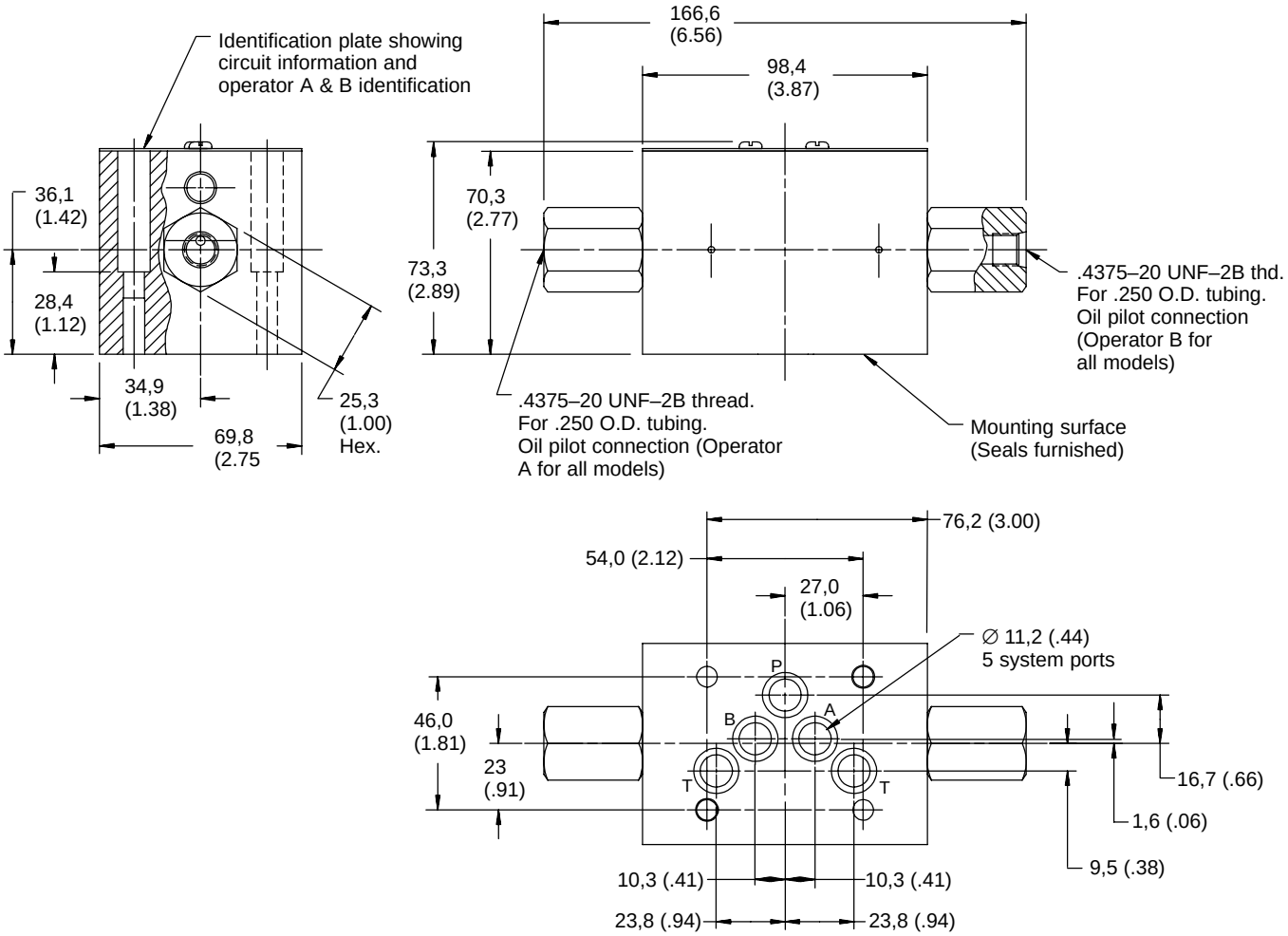

Cross Section of Pressure Feedback Model

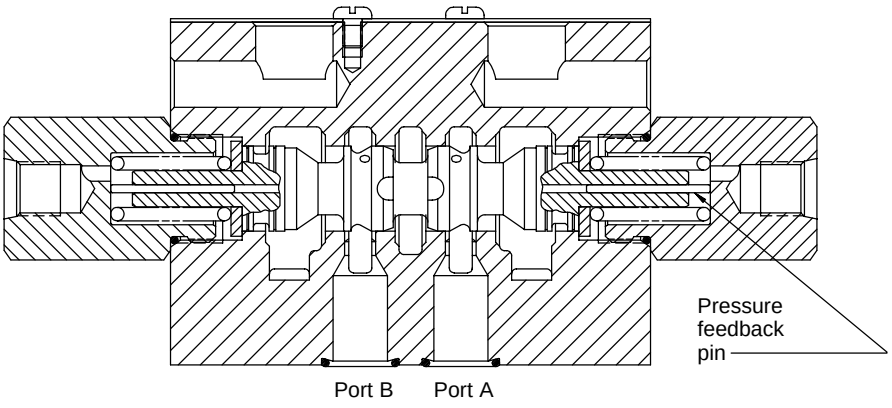

Subplates & Bolt Kits

Valves, subplates, and bolts for joining the two must be ordered separately per the following examples.

Note: Subplates are rated at 207 bar (3000 psi) only.

Example A:
(1) KDG3V-3-2C23A-S-60 valve
(1) DGVM-3-10-S subplate
(1) BK590716 mounting bolt kit (inch)
Maximum recommended mounting bolt torque is 6 Nm (53 lb. in.).

Example B:
(1) KDG3V-5-2C63A-S-10 valve
(1) DGSM-01-20-T8 subplate
(1) BK4-06 mounting bolt kit (inch)
Maximum recommended mounting bolt torque is 15 Nm (130 lb. in.).

DGVM-3-10-S Subplate

Millimeters (Inches)

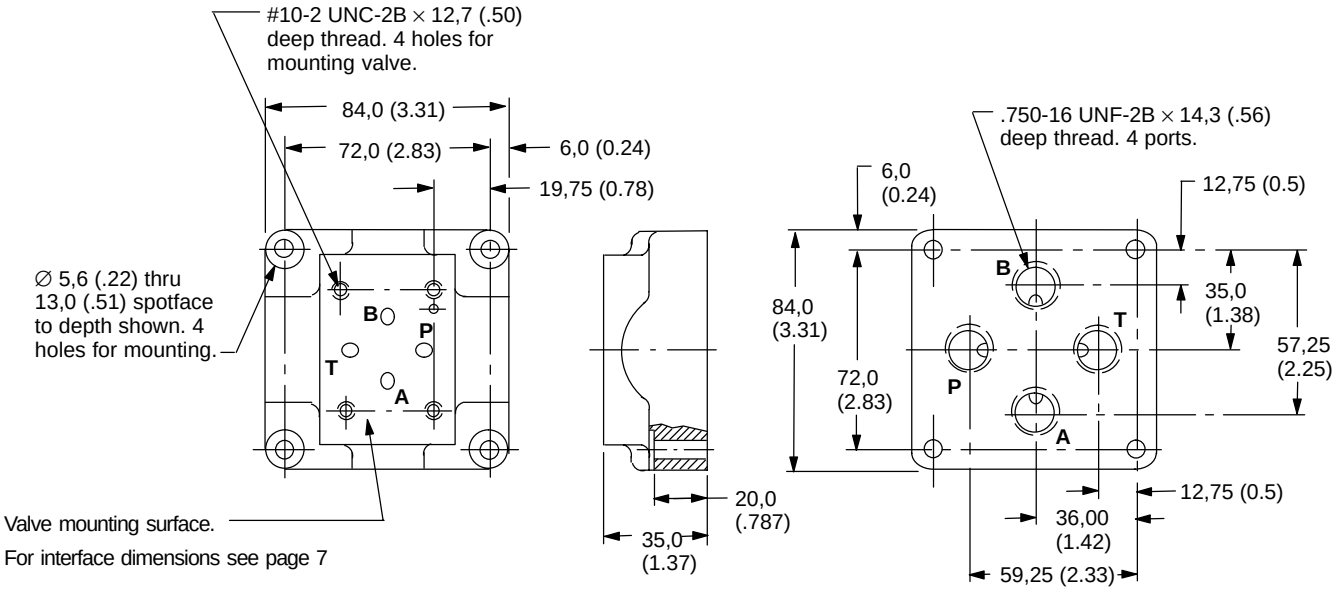

DGSM-01-20-T8 Subplate

Millimeters (Inches)

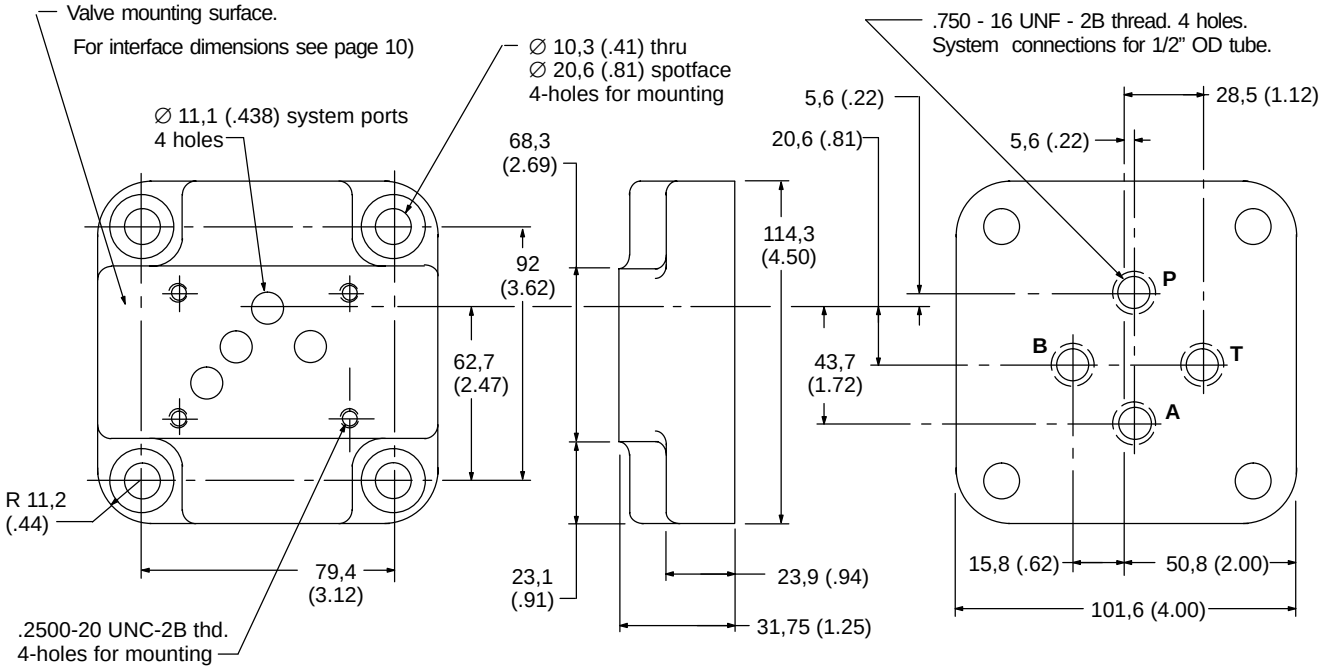

Fluid Cleanliness

Proper fluid condition is essential for long and satisfactory life of hydraulic components and systems. Hydraulic fluid must have the correct balance of cleanliness, materials, and additives for protection against wear of components, elevated viscosity and inclusion of air.

Essential information on the correct methods for treating hydraulic fluid is included in Vickers publication 561 “Vickers Guide to Systemic Contamination Control,” available from your local Vickers distributor or by contacting Vickers, Incorporated. Recommendations on filtration and the selection of products to control fluid condition are included in 561.

Recommended cleanliness levels, using petroleum oil under common conditions, are based on the highest fluid pressure levels in the system and are coded in the chart below. Fluids other than petroleum, severe service cycles, or temperature extremes are cause for adjustment of these cleanliness codes. See Vickers publication 561 for exact details.

Vickers products, as any components, will operate with apparent satisfaction in fluids with higher cleanliness codes than those described. Other manufacturers will often recommend levels above those specified. Experience has shown, however, that life of any hydraulic component is shortened in fluids with higher cleanliness codes than those listed below. These codes have been proven to provide a long, trouble-free service life for the products shown, regardless of the manufacturer.

	System Pressure Level bar (psi)		
Product	**<138 (<2000)**	**138–207 (2000–3000)**	**210+ (3000+)**
Vane pumps, fixed	20/18/15	19/17/14	18/16/13
Vane pumps, variable	18/16/14	17/15/13	
Piston pumps, fixed	19/17/15	18/16/14	17/15/13
Piston pumps, variable	18/16/14	17/15/13	16/14/12
Directional valves	20/18/15	20/18/15	19/17/14
Proportional directional valves	**17/15/12**	**17/15/12**	**15/13/11**
Servo valves	16/14/11	16/14/11	15/13/10
Pressure/Flow controls	19/17/14	19/17/14	19/17/14
Cylinders	20/18/15	20/18/15	20/18/15
Vane motors	20/18/15	19/17/14	18/16/13
Axial piston motors	19/17/14	18/16/13	17/15/12
Radial piston motors	20/18/14	19/17/13	18/16/13