Servo Electronics

Amplifiers, Power Supplies, Function Modules, and Controllers

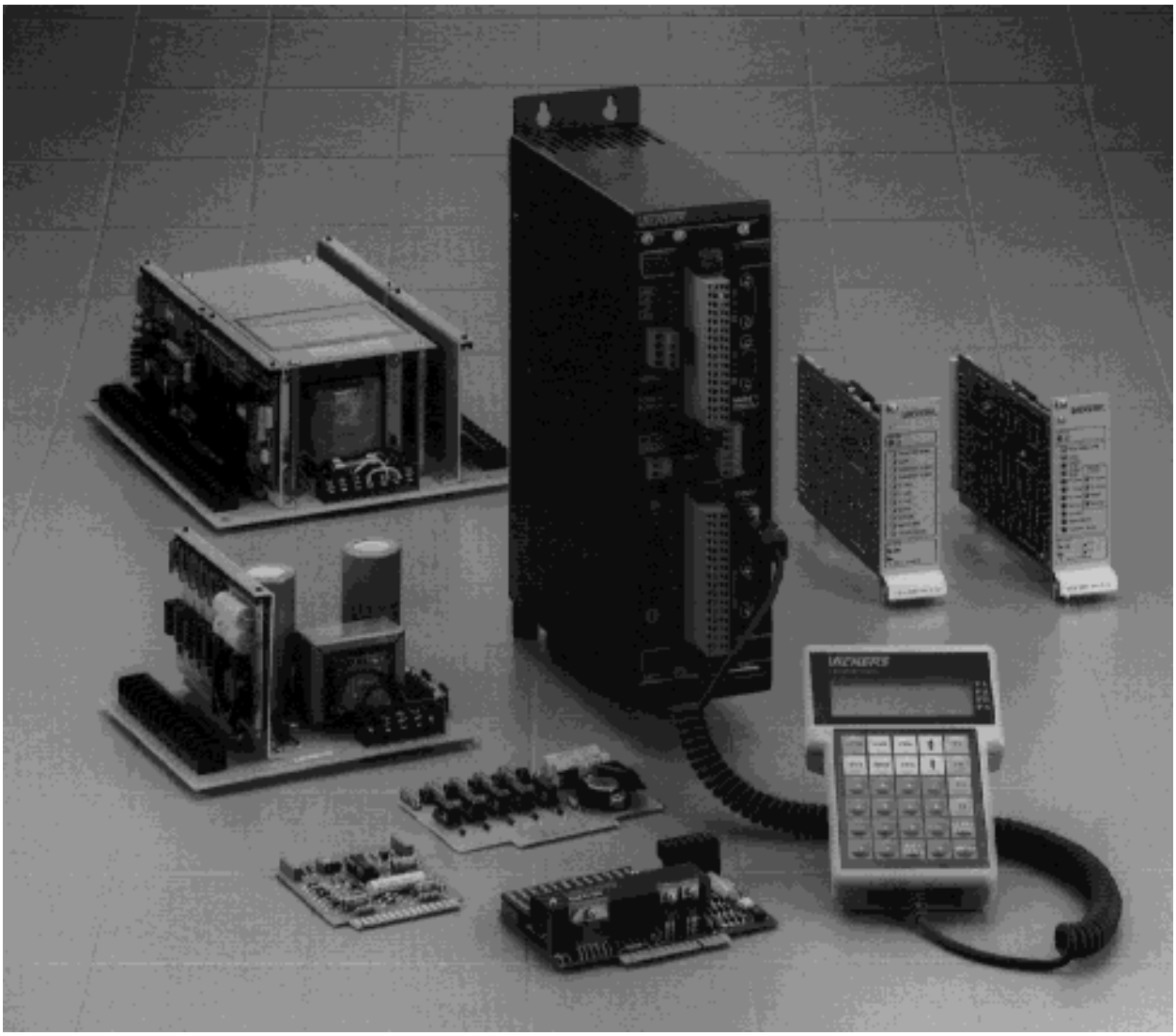

Introduction

Vickers amplifiers, power supplies, and function modules provide a convenient and economical package of electronics for closed loop servo control.

These electronic components have been specially designed and assembled for high reliability and improved ease of use. They can be applied in systems utilizing Vickers servovalves and proportional valves and may also be used to control competitors' valves.

EM series power supplies and the SMC 20H controller are panel mounted. EM series amplifiers and function modules plug into fully compatible slots in the EMRS-A-11 and EMP-A-20 power supply units. The EEA series amplifiers are designed for use in a standard rack mount.

For accurate and repeatable system performance with assured component compatibility, trust Vickers servo electronics.

Contents

EM-D-30 Servo Amplifier with PID 3

EM-K-10 Ramp Module 6

EM-J-10 Programmer Module 10

EMRS-A-11 Power Supply Unit 13

EMP-A-20 Power Supply Unit 16

EEA-PAM-591 Amplifiers 18

EEA Accessory Products 22

SMC 20H Two-Axis Hydraulic Position Controller 23

© Eaton Hydraulics, Incorporated 2000
All Rights Reserved

EM-D-30 Servo Amplifier with PID

Circuit and Connections

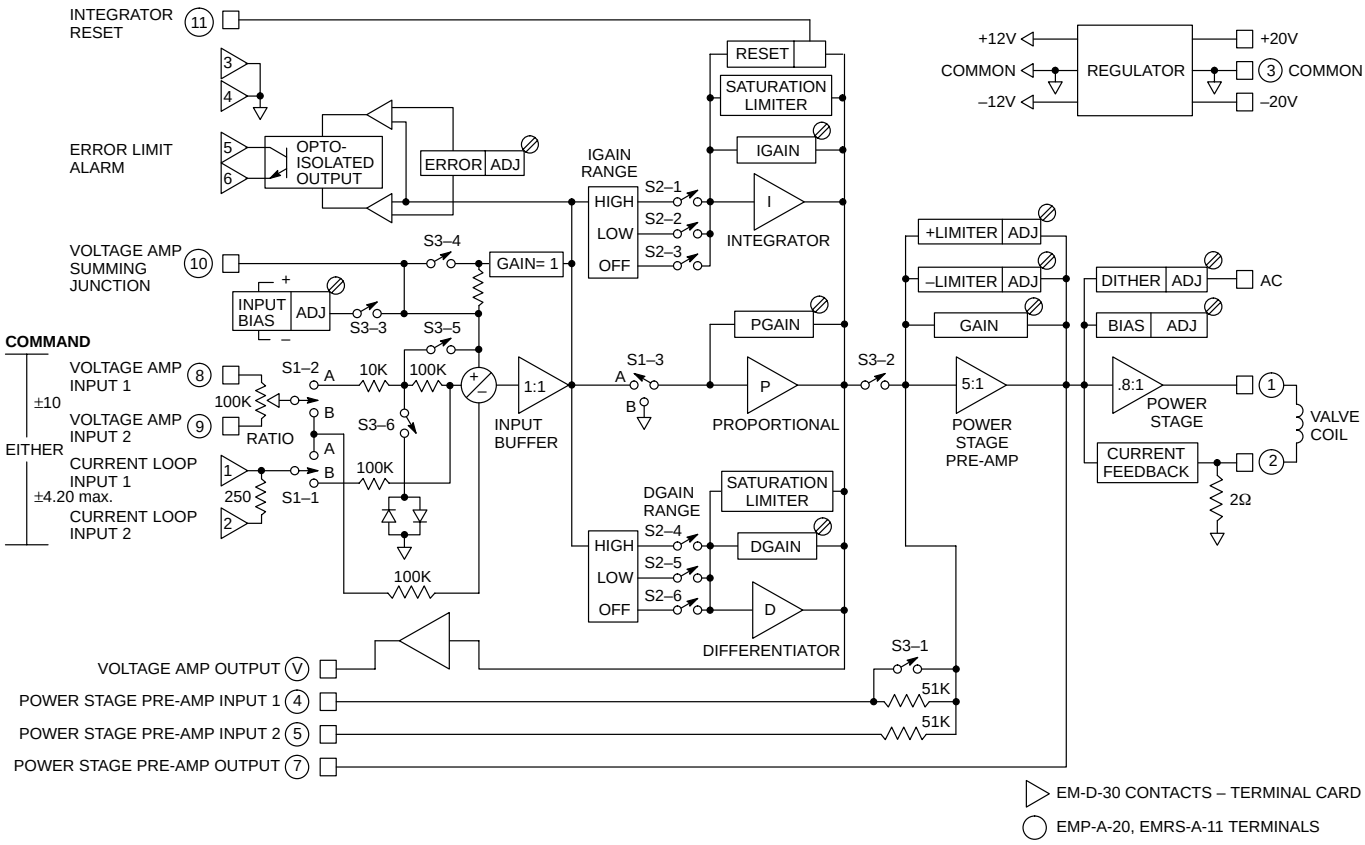

Operating Data

The EM-D-30 amplifier module is an extended version of the EM-D-20 amplifier. It is functionally and pin for pin downward compatible.

Adjustment of current limiters and bias in the output stage allows the unit to drive single-polarity and bipolar servo valves as well as other current controlled valves.

By selection of the appropriate switches, inputs can be inverted in a number of combinations, including the ratioing of two inputs and the introduction of a new current loop input.

Excessive following error or “in-position” can be monitored by means of an adjustable onboard detection circuit which includes an opto-coupled output.

Inversion:

Each of the four stages of the EM-D-30 amplifier inverts the input polarity. Valve output current can be inverted by input inversion switches S1-1 and S1-2.

Reset:

When pin 11 is grounded, the integrator reset function is activated causing the integrator amplifier output to maintain zero. An open on pin 11 restores normal operation.

NOTE

With reset “ON”, the “P” and “D” amplifiers still function normally.

Specifications

Power Stage	
Output (pins 1 and 2)	±600 mA into 20 ohm load
Inputs 1 and 2:	
Range	±10V DC
Absolute maximum	±36V DC
Bias range	±400 mA
Gain range	100 to 1600 mA/volt
Dither range	0 to 60 mA
Drift due to temperature	＜0,4 mA/°C (0.2 mA/°F) at maximum gain
Drift versus supply voltage	＜0.001 mA/V at maximum gain at null
Warm-up drift (after 30 minutes)	＜0.1 mA
Frequency response	3 dB down at 6 kHz, maximum gain
Power Pre-amp Stage	
Output (pin 7)	±6V DC at 5 mA
Gain	1 to 15 V/V
Limiting	±0V DC to 6V DC
Voltage Amplifier Stage	
Output (pin 6)	±10V DC at 2 mA
Inputs 1 and 2:	
Range	±10V DC
Absolute maximum	±36V DC
Gain ranges (ratio potentiometer centered):	
Linear, low range	0.08 to 1.1 V/V
Linear, high range	0.5 to 3.5 V/V
Integrating, low range	1.5 to 21.5 V/sec-V
Integrating, high range	9.6 to 133 V/sec-V
Differential, low range	1.5 to 20 V-sec/V
Differential, high range	10 to 150 V-sec/V
Current loop	0 to 20 mA input
Drift due to temperature	＜0.0002 V/V at maximum gain
Drift versus supply voltage	＜0.0001 V/V at maximum gain
Warm-up drift (after 30 minutes)	＜0.004V DC
Drift versus time (after 24 hours)	＜0.005V DC
Error detection	Opto-coupled alarm output, error limit adjustable from ±0 to 10V DC
Mass (weight)	2,2 kg (1 lb)

© Vickers, Incorporated 1997
All Rights Reserved

Installation Dimensions

millimeters (inches)

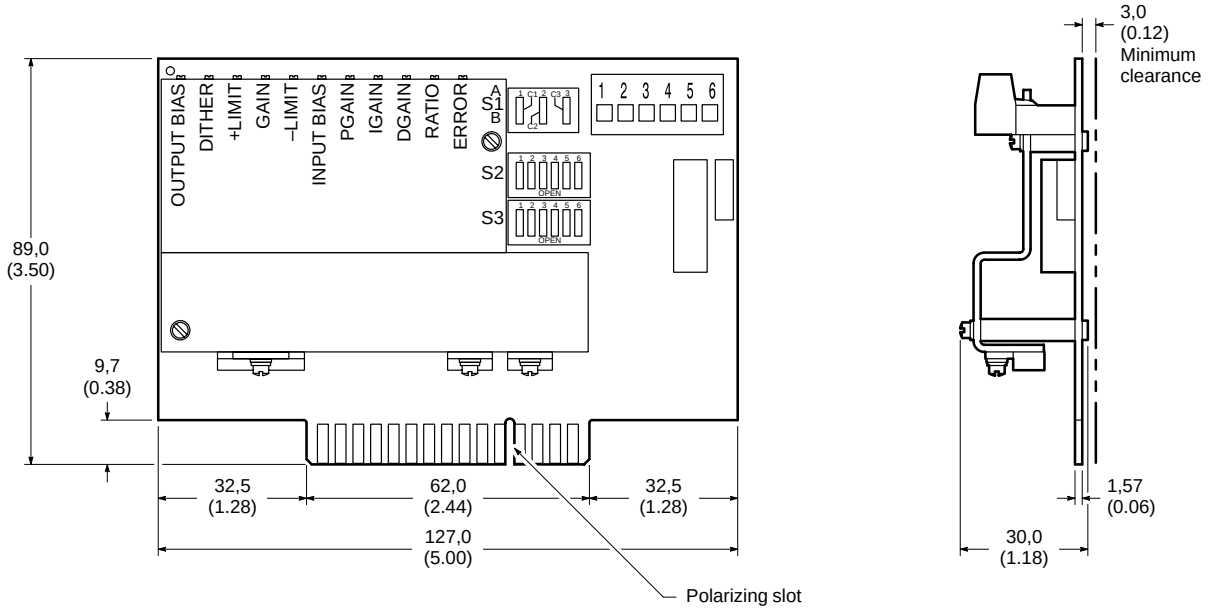

EM-K-10 Ramp Module

Circuit and Connections

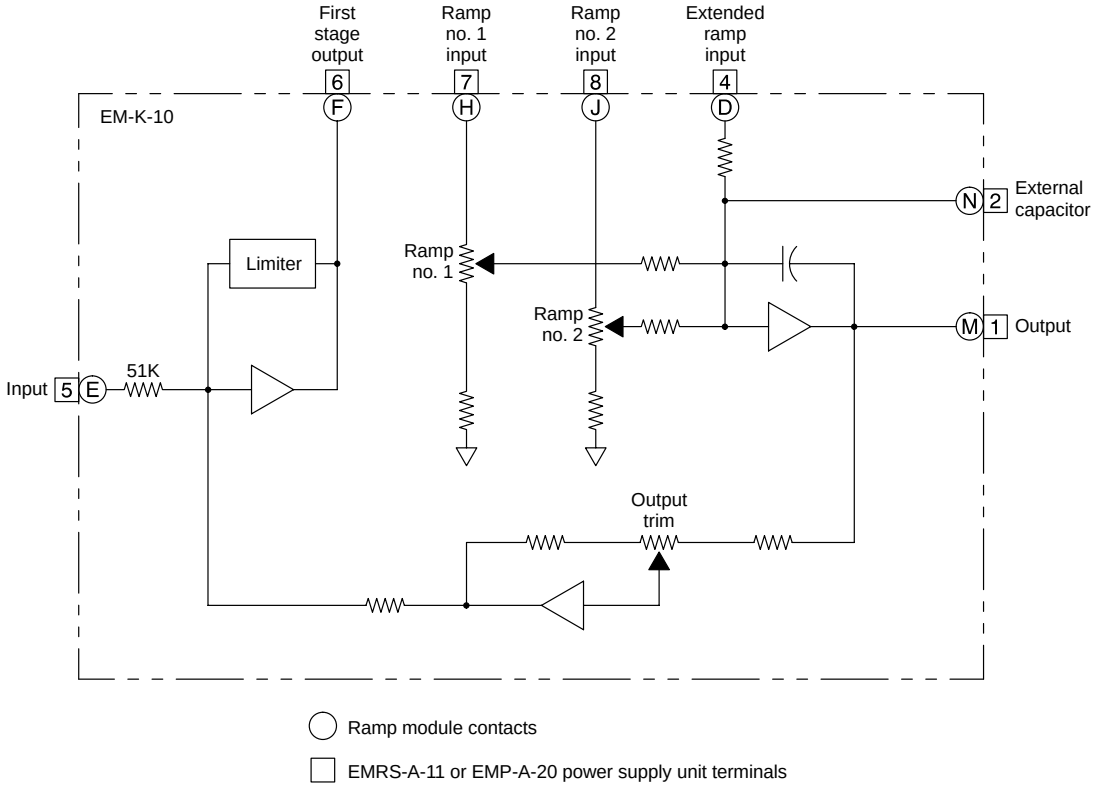

Operating Data

Usage

The EM-K-10 ramp module converts step changes in input signals to ramped signals for smooth transition from one operating level to another.

Ramping time can be adjusted from virtually instantaneous response to 5 seconds for full range. Extended ramp times can be obtained with additional external capacitors. See specifications and curves for details.

When used with an EM-D-30 servo amplifier, the ramp module provides a means of controlling speed in positioning systems, acceleration and deceleration in speed control systems, and the rate of pressure change in pressure control systems.

Design

The EM-K-10 consists of a linear circuit capable of accepting 0 to ±10V DC step input voltage levels. Two ramp rate potentiometers allow adjusted ramp rates between 0.03 and 0.5 seconds per volt output change. Extended ramp rates up to 25 sec/V output change can be obtained by the addition of external mylar or similar quality capacitors with a 50 volt or higher rating. The ramp rate potentiometers are selected externally by the use of a simple diode steering circuit or contact closures.

In addition to the module mounted ramp rate potentiometers, provision has been made for the addition on an infinite number of externally located ramp rate potentiometers.

© Vickers, Incorporated 1997
All Rights Reserved

Specifications

Input voltage	–10V to +10V DC
Input impedance	51k Ohms
Output voltage	–10V to +10V DC
Output load impedance	5k Ohm minimum
Output current	2 mA maximum
Ramp rate adjustment	0.03 to 0.5 sec/V output change (with external capacitors)
Independent ramp rate adjustments	Two potentiometers on module
Input/output relationship	±1% maximum input voltage
Extended ramp rates	Up to 25 sec/V output change (with external capacitors)
Multiple ramp rates	Terminal available for external connection of additional potentiometers and relays
Ambient temperature range	0° to 50° C (32° to 122° F)
Mass (weight)	0,45 kg (1 lb)

Extended Ramp Ranges

Ramp rates can be extended beyond 2 MFD by adding external capacitors between terminals 1 and 2. The chart shows recommended total capacitance values. Subtract 2MFD from reading to obtain external capacitor value. Capacitors should be mylar or similar quality with 50V or higher rating.

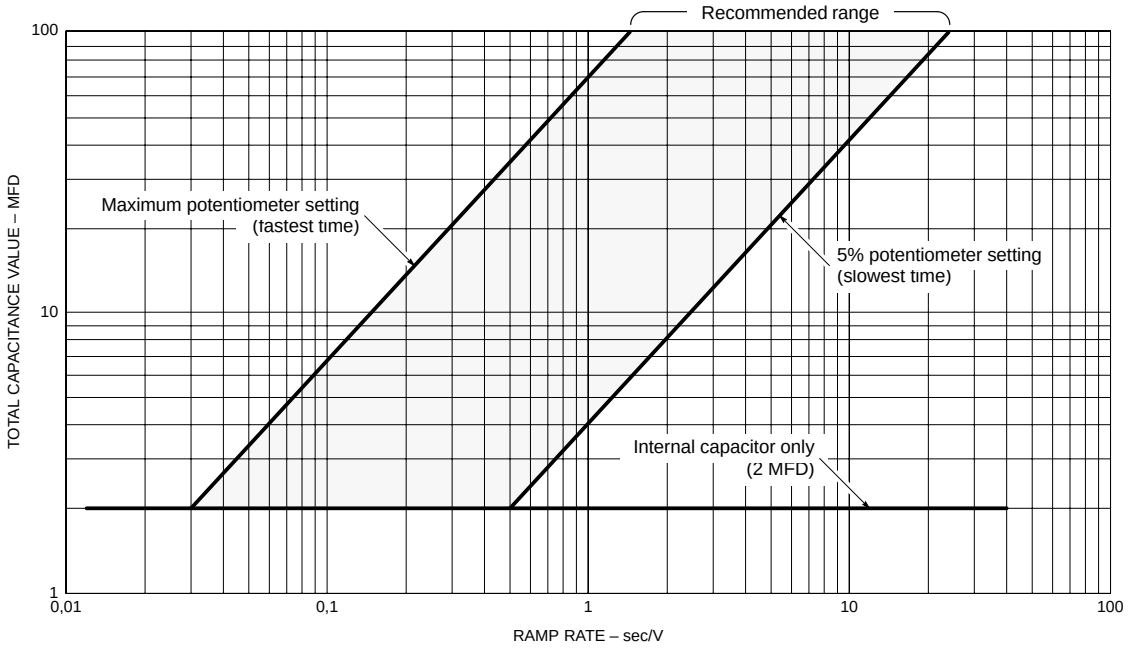

Application Circuit Examples

Single Ramp Rate Circuit

- Positive and negative input signals are ramped up and down at one rate. Rate is adjustable by ramp rate no. 1 potentiometer.

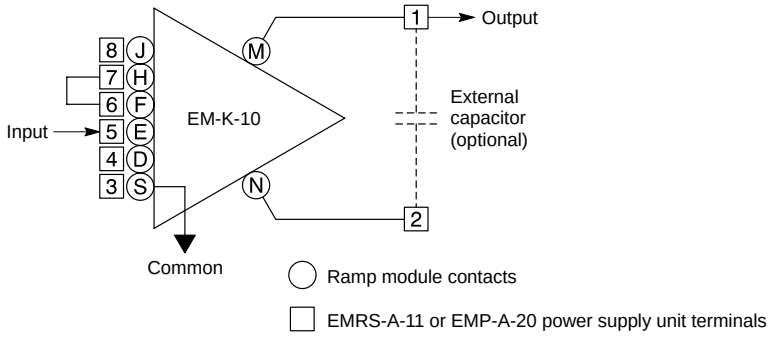

Dual Ramp Rate Circuit with Diode Steering Logic

- A positive-going input signal is ramped up at a rate adjusted by ramp rate no. 1 potentiometer.
- A negative-going input signal is ramped down at a rate adjusted by ramp rate no. 2 potentiometer.

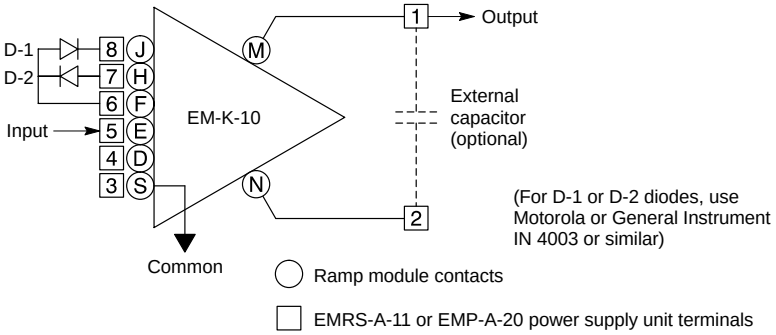

Internal and External Ramp Adjustments with Relay Logic

- 1CR energized: A positive- or negative-going input signal is ramped up or down at a rate adjusted by ramp rate no. 1 potentiometer.
- 2CR energized: A positive- or negative-going input signal is ramped up or down at a rate adjusted by ramp rate no. 2 potentiometer.
- 3CR energized: A positive- or negative-going input signal is ramped up or down at a rate adjusted by P1 potentiometer.
- 4CR energized: A positive- or negative-going input signal is ramped up or down at a rate adjusted by P2 potentiometer.
- Any number of ramp rates may be obtained by adding additional resistor or potentiometer combinations.

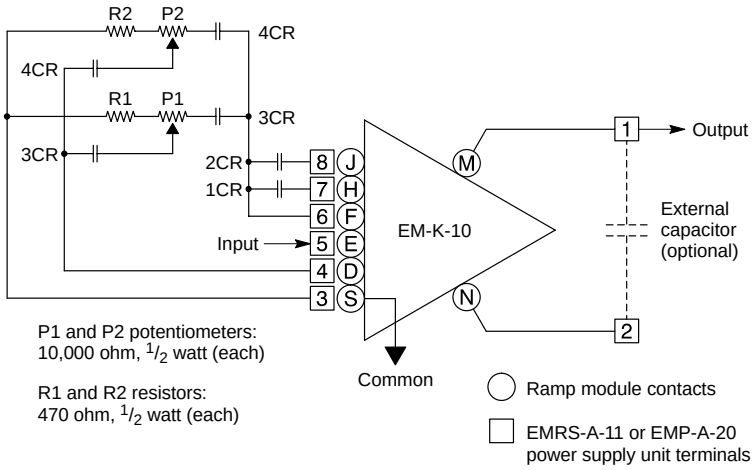

© Vickers, Incorporated 1997
All Rights Reserved

Performance Example

The following example charts performance of the EM-K-10 with ramp rate potentiometers no. 1 and no. 2 connected with diodes as shown on page 8.

Ramp rate potentiometer no. 1 is set at 5% (0.5 sec/V). Potentiometer no. 2 is set at 55% (0.1 sec/V).

Ramp time = Ramp rate x Volts change

First ramp time = 0.5 sec/V x 10 volts
= 5 seconds
Second ramp time = 0.1 sec/V x 15 volts
= 1.5 seconds
Third ramp time = 0.5 sec/V x 5 volts
= 2.5 seconds

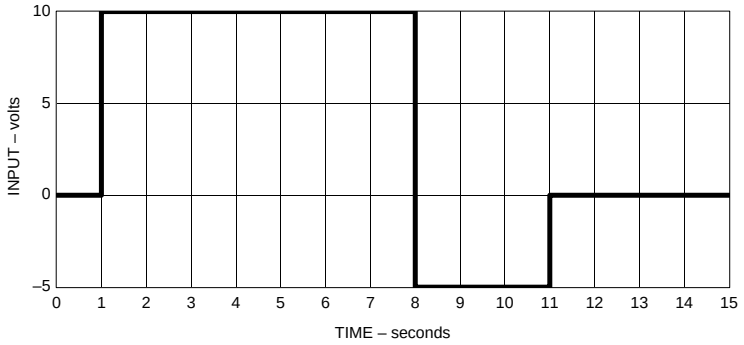

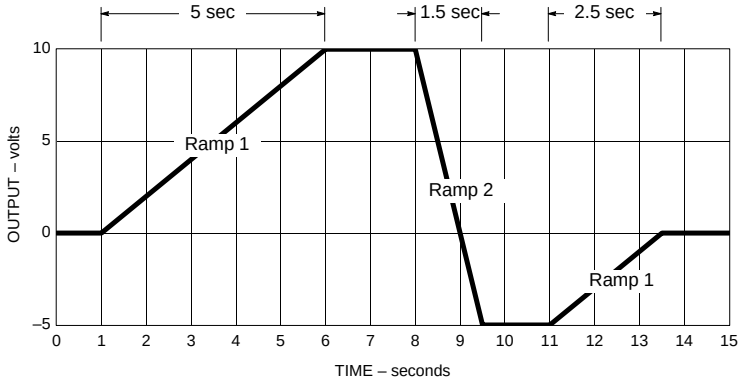

Installation Dimensions

millimeters (inches)

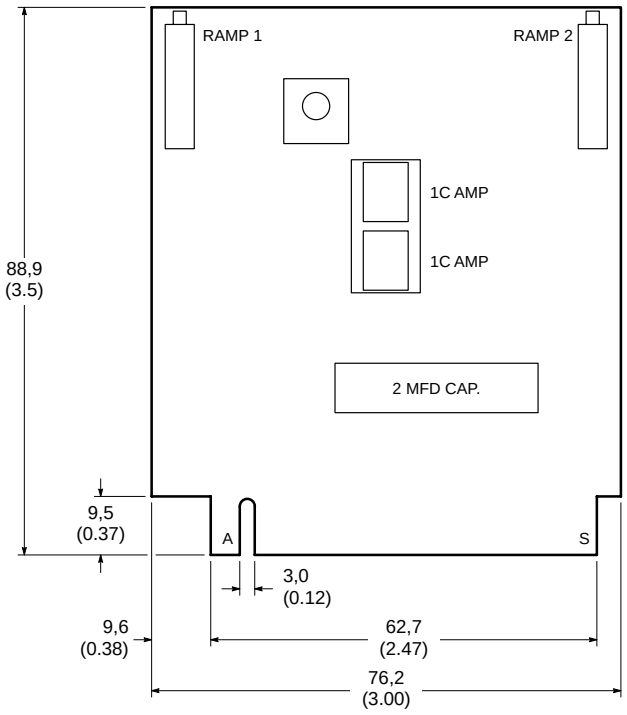

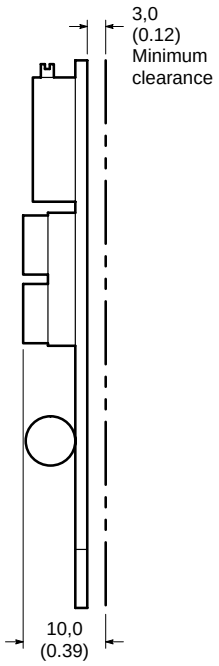

EM-J-10 Programmer Module

Circuit and Connections

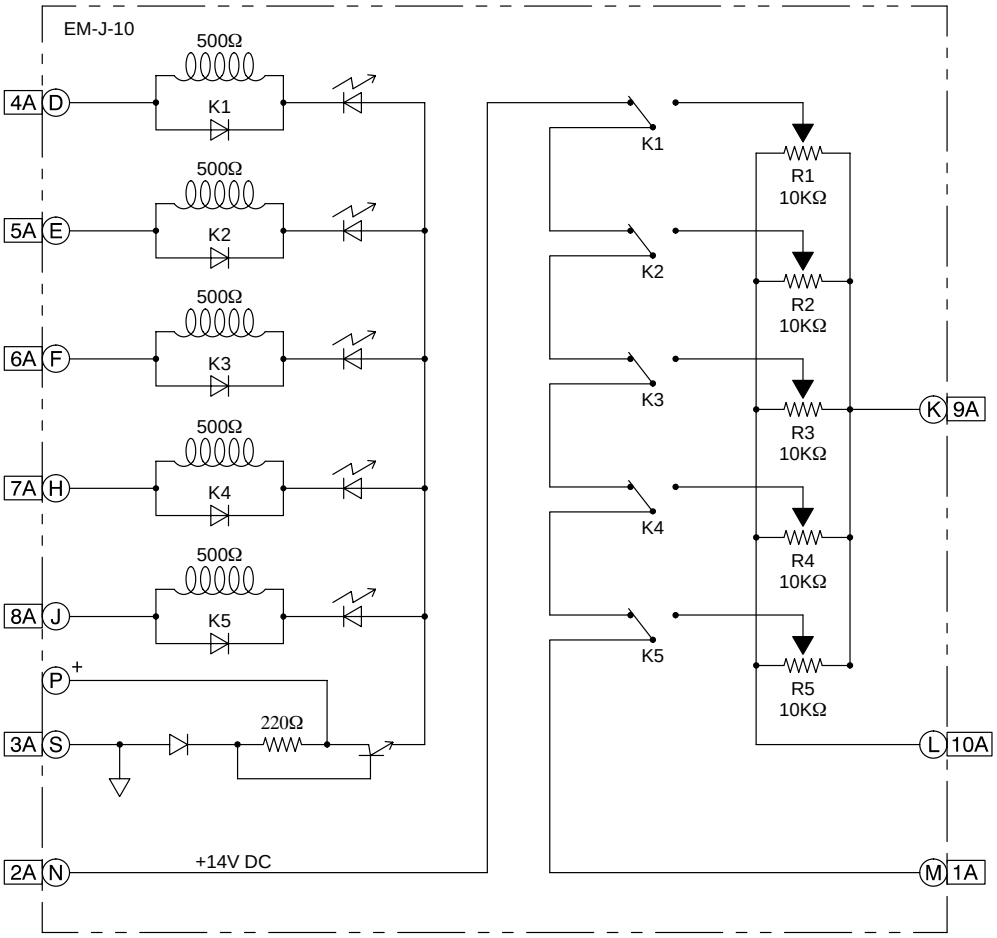

Programmer module contacts

EMRS-A-11 or EMP-A-20 power supply unit terminals

Operating Data

Usage

The EM-J-10 programmer module provides up to five preset command signals. When used with an EM-D-30 servo amplifier, the module provides a means of presetting and selecting a variety of positions, speeds, or forces in closed loop servo systems. This module must be installed in either a single-card EMRS-A-11 or four-card EMP-A-20 power supply unit.

Design

The programmer module contains five potentiometers, five DC reed relays in dual inline packages, pilot lights for each relay, and an internal power source for the relays.

A relay is energized when one side of its coil is connected to ground externally by means of a switch or contact closure. The potentiometer associated with the relay is then connected to the output terminal and sets the output signal level.

Only one command signal at a time can be delivered by the module, even if two or more relays are energized simultaneously.

© Vickers, Incorporated 1997
All Rights Reserved

Specifications

Relays	12V, dual inline, reed type
Relay coil current	28 mA
Supply voltage	+20V DC nominal
Relay contact maximum rating	500 mA, 100V
Potentiometer type	10k Ohms, 22 turns
Potentiometer resistance element	Connected in parallel
Potentiometers wipers	Connected in series
Ambient temperature range	0° to 50° C (32° to 122° F)
Mass (weight)	0,45 kg (1 lb)

Application Circuit Example

Servo Control with Five Preset Positions

This circuit controls an SM4 servovalve and uses an EM-J-10 programmer module along with an EM-D-30 servo amplifier, EMP-A-20 power supply unit, and a feedback transducer.

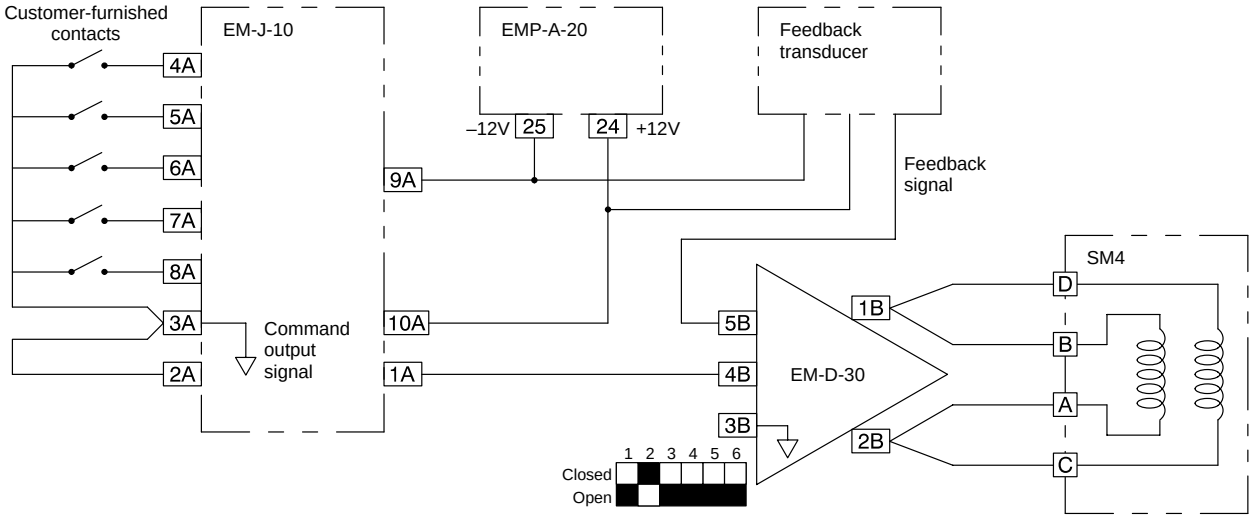

Installation Dimensions

millimeters (inches)

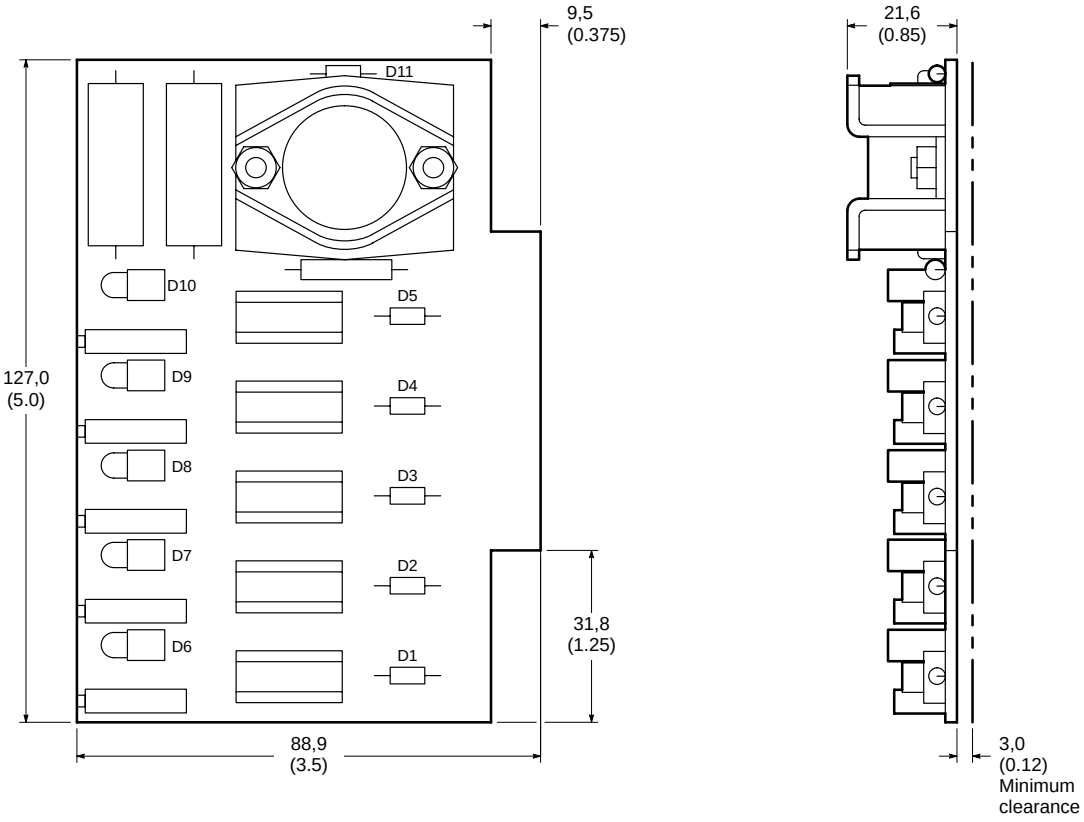

© Vickers, Incorporated 1997
All Rights Reserved

EMRS-A-11 Power Supply Unit

Circuit and Connections

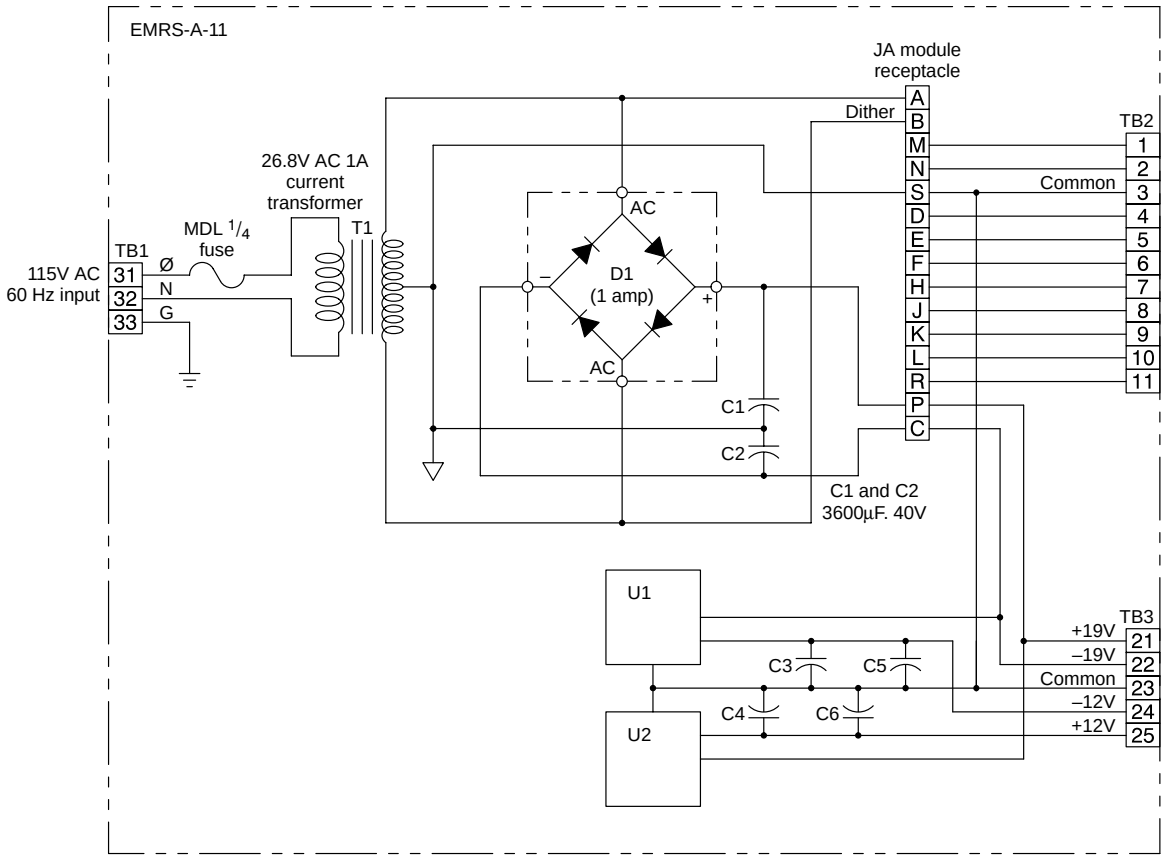

Operating Data

Usage

The EMRS-A-11 power supply unit is designed for use with Vickers electronic control modules in single axis electrohydraulic control systems.

Design

The power supply unit provides the means for mounting one module, supplying it with the proper excitation voltages, and connecting it to external circuit components through a terminal strip. In addition, a highly regulated ±12V DC power supply circuit is included for excitation of command and feedback circuit components. A separate terminal strip is provided for connections to this circuit.

Specifications

Input – TB1	
Input voltage (no load)	115V AC
Input frequency	60 Hz
Circuit protection	3AG $^{1}/_{4}$ amp slow blow fuse on input power line
Main Supply – TB2	
Output voltage (no load)	±19V DC
Output current per leg	0.6A DC
Maximum ripple	0.5V peak to peak
Line regulation (10% line change)	10%
Load regulation (0 to 0.06A output current change)	18%
Required Supply – TB3	
Output voltage	±12V DC, ±0.12V DC
Output current per leg	150 mA
Short circuit current leg	1.3 amps
Balance	0.24V
Line regulation (±10% line change)	0.03V
Load regulation (0 to 0.15A output current change)	0.05V
Temperature regulation	0.25V change over full range
Temperature coefficient	2mV/°C
Warm-up drift (after 30 minutes)	0.12V
General	
Ambient temperature range	0 to 65°C (32 to 149°F)
Mass (weight)	1,14 kg (2.5 lbs)

© Vickers, Incorporated 1997
All Rights Reserved

Installation Dimensions

millimeters (inches)

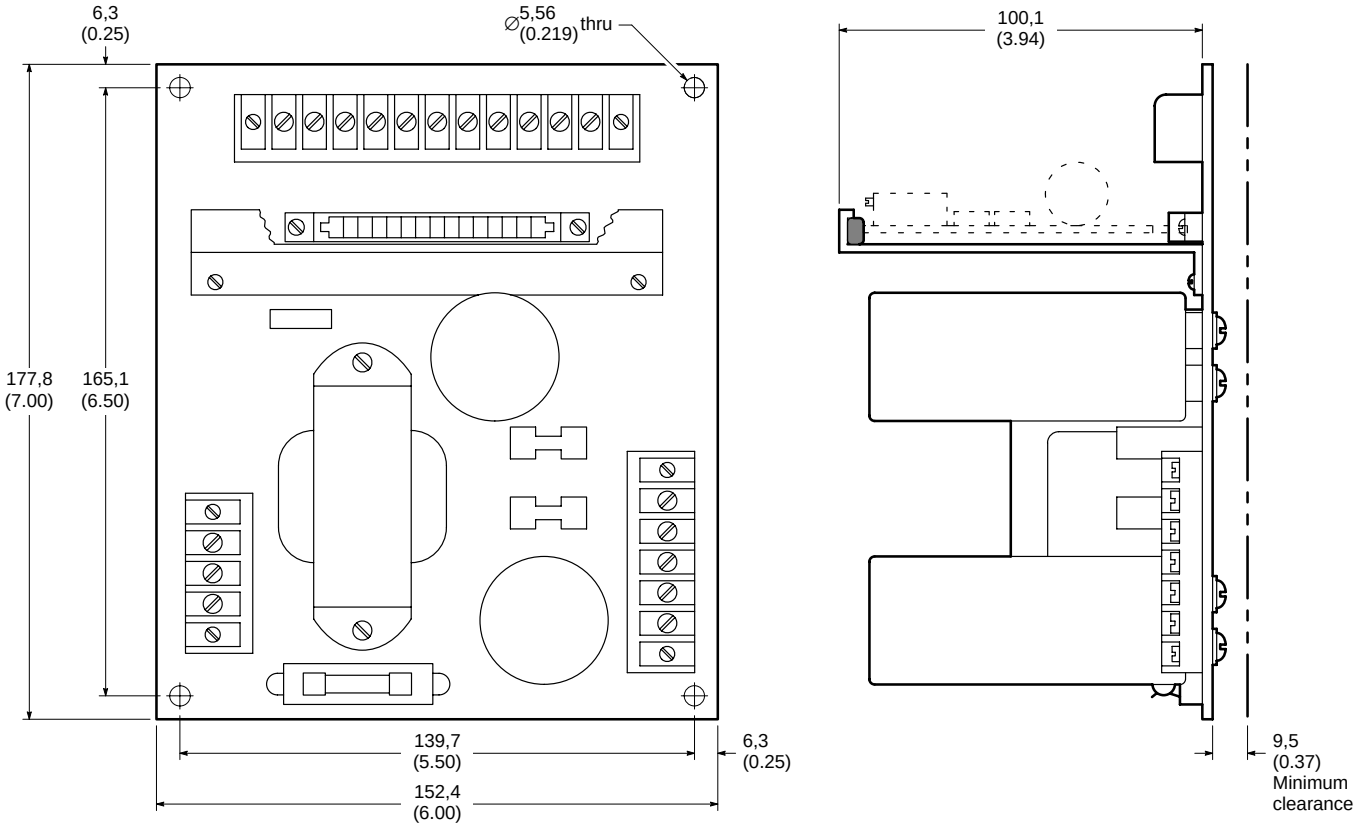

EMP-A-20 Power Supply Unit

Circuit and Connections

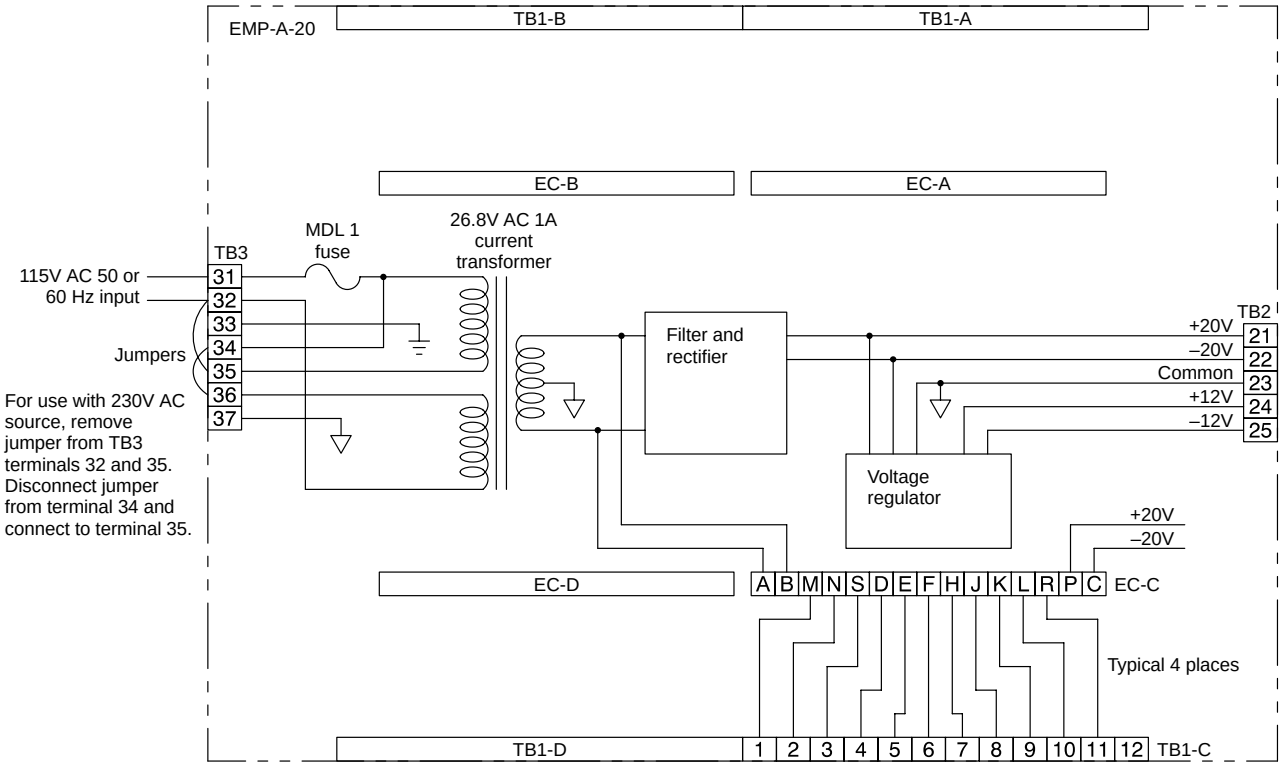

Customer connections to be made with AWG No. 14 to No. 22 wire. Bare wire ends or spade lugs may be used. Terminal screw size: No. 6–32 x 6,3mm (0.25 in) long.

Operating Data

Usage

The EMP-A-20 power supply unit is designed for use with Vickers electronic control modules in single and multiple axis electrohydraulic control systems.

Design

The power supply unit provides the means for mounting up to four modules (two EM-D-30 amplifiers, one EM-K-10 ramp module and one EM-J-10 programmer module). The unit supplies each with the proper excitation voltages, and connects it to external circuit components through a terminal strip. In addition, a highly regulated ±12V DC power supply circuit is included for excitation of command and feedback circuit components.

Specifications

Input	
Input voltages (no load)	115/230V AC ±10%
Input frequencies	50 or 60 Hz
Circuit protection	1A time-delay fuse on input power line
Main Output to Amplifier	
Output voltage (no load)	±20V DC
Output current total	2.5A DC
Maximum ripple	0.6V RMS
Line regulation (10% line change)	12%
Load regulation (0 to 2.5A output current change)	12%

© Vickers, Incorporated 1997
All Rights Reserved

Specifications (continued)

Regulated Output to Command/Feedback Circuits (includes current limiting and thermal shutdown protection)	
Output voltage	±12V DC,±0.6V DC
Output current per leg	200 mA
Line regulation (±10% line change)	0.05V
Load regulation (0 to 40mA output current change)	0.03V
Temperature coefficient	2mV/°C
Warm-up drift (after 30 minutes)	0.03V
General	
Ambient temperature range	0 to 65°C (32 to 149°F)
Mass (weight)	4,1 kg (9 lbs)

Installation Dimensions

millimeters (inches)

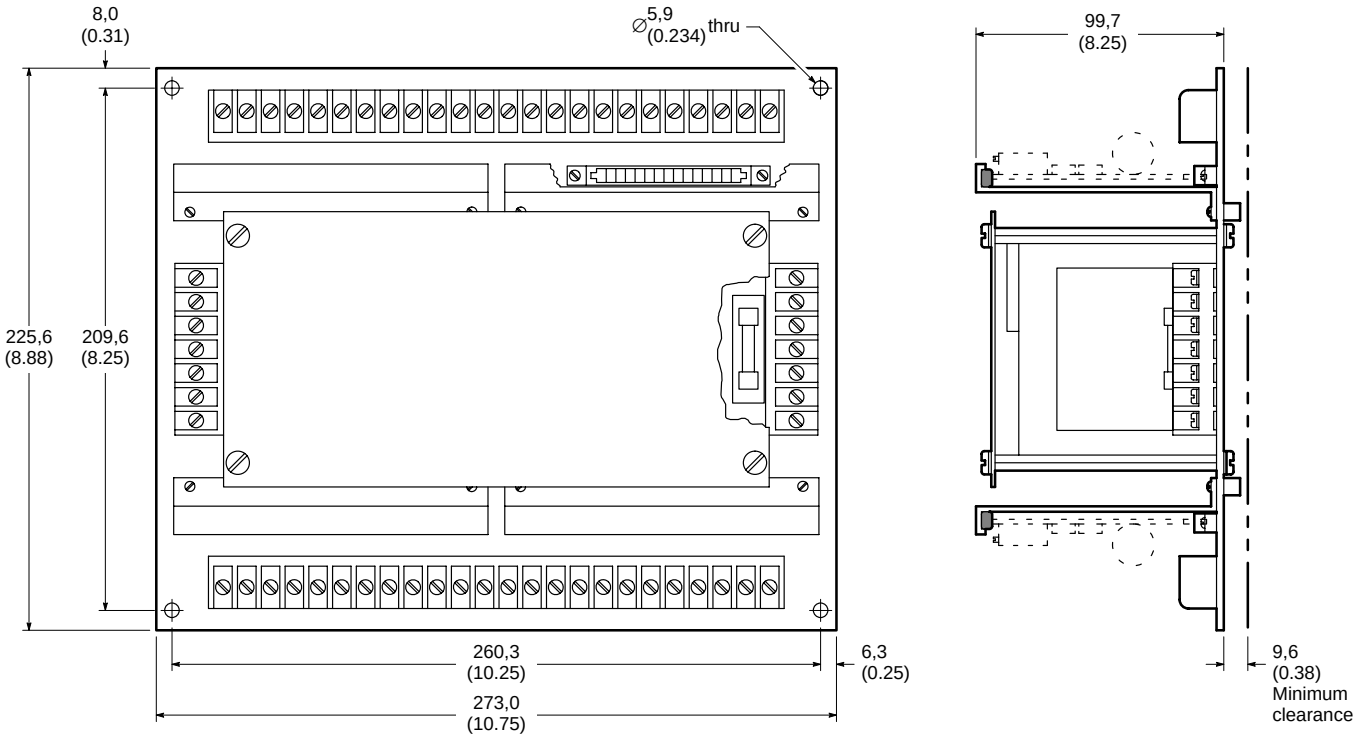

EEA-PAM-591 Amplifiers

Circuit and Connections

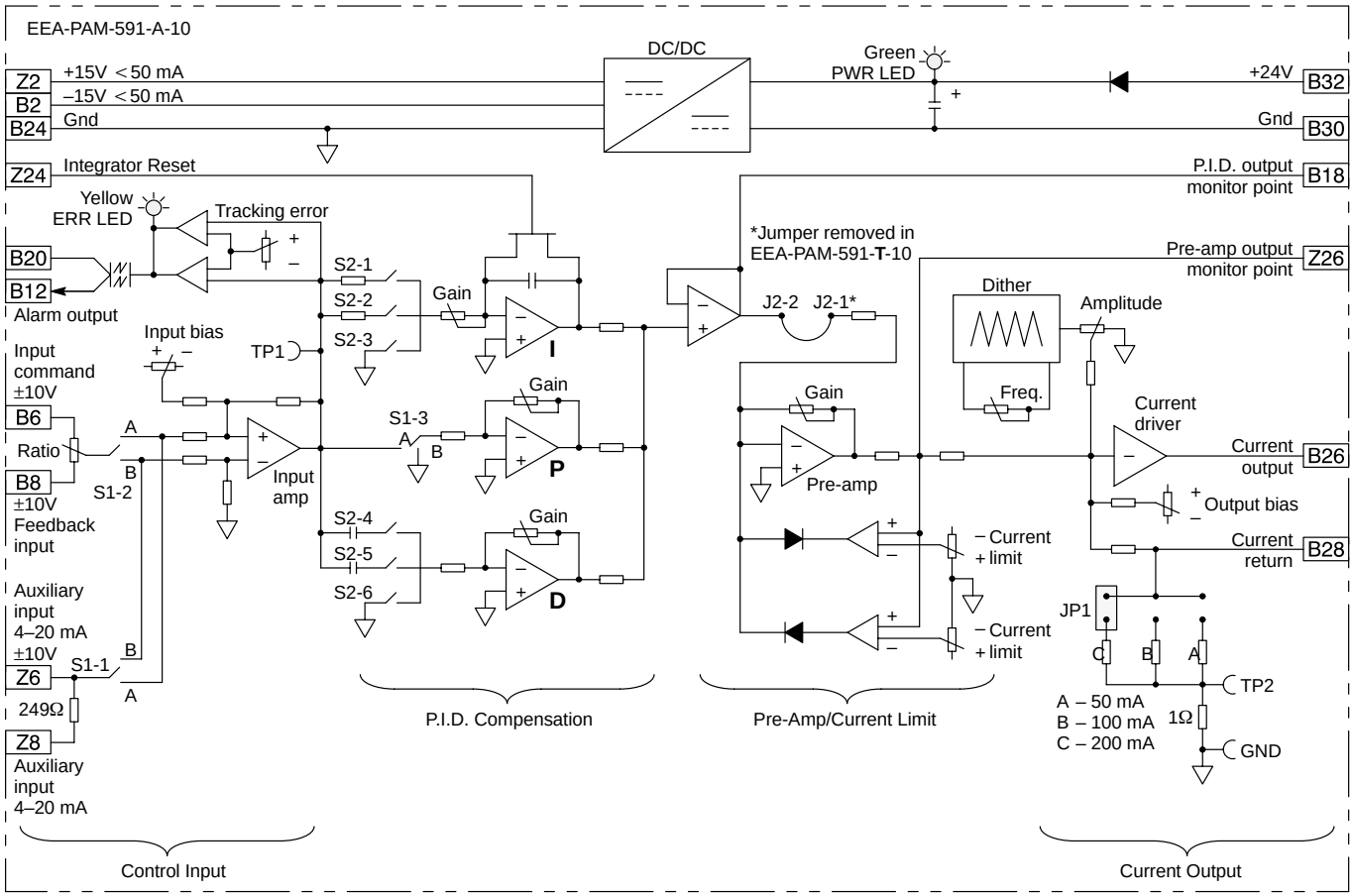

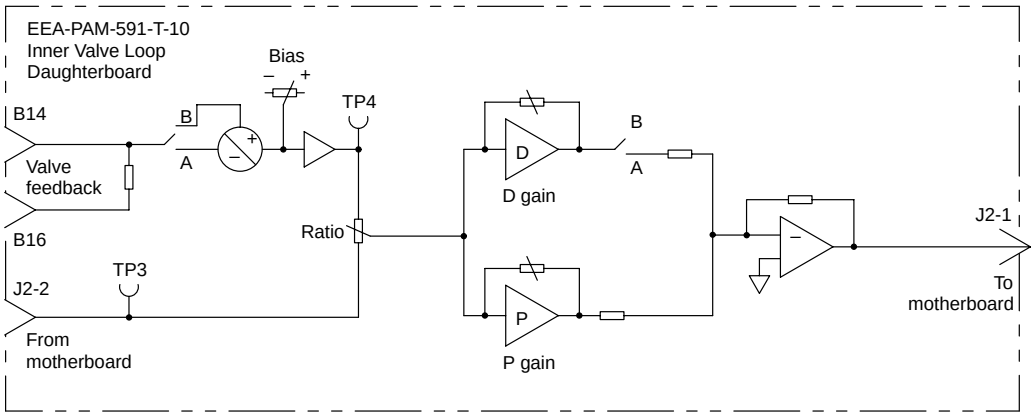

© Vickers, Incorporated 1997
All Rights Reserved

Operating Data

Usage

The EEA-PAM-591-*-10 universal servovalve amplifier cards are designed to drive Vickers SM4, SX4, and SP4 servovalves as well as other industry standard servovalves, such as Moog, Atchley, Pegasus, and Rexroth in open and closed loop servo systems. This package offers flexible circuitry in a standard rack mount format requiring a single +24V DC power supply.

The EEA-PAM-591-A-10 is for use with 2-stage servovalves, while the EEA-PAM-591-T-10 can control 3-stage servovalves accepting DC inner loop feedback.

By selecting the appropriate onboard switches, the circuitry can be easily configured for use in position, force, and velocity applications.

Design

These amplifier cards can accept both voltage and current control signals, independently invert them, and generate drive currents up to ±200 mA.

Improved servo system performance can be achieved by utilizing the independently adjustable proportional, derivative, and integral gain networks.

In addition, a jumper-selectable “output current range” has been included for multiple output resolution settings.

Features and Benefits

- Single +24V DC power supply.
- Standard DIN 41612 F48 interface.
- Accepts voltage or current control signals.
- Adjustable command and feedback signal ratio.
- Switch-selectable control signal inversion.
- Independently adjustable P.I.D. networks.
- Independent P.D. compensation for inner loop feedback (591-T only).
- External integrator reset input.
- Switch-selectable gain ranges for derivative and integral.
- Adjustable frequency and amplitude dither signal.
- Adjustable tracking alarm with opto-coupled output.
- Jumper-selectable output current ranges (±50, 100, or 200 mA).
- Front panel LEDs, test points, and adjustments for quick, easy setup and diagnostics.

Specifications

Power requirements:	
Nominal	+24V DC < 500 mA (at 200 mA load)
Range	+20 to +32V DC (amplifier shuts down below +20V DC)
Maximum ripple	±5% peak, reverse polarity protected
Output voltages (pins B2 and Z2)	±15V DC < 50 mA Ripple < 50 mV peak to peak –15V DC not short circuit protected
Command signal inputs:	
Voltage input (pin B6, B8, or Z6)	Range ±10V DC Impedance 100k ohms
Current input (pins Z6 and Z8)	Range 0 to 20 mA Impedance 249 ohms
Output current drive (jumper selectable):	
Jumper JP1 in position A	±50 mA
Jumper JP1 in position B	±100 mA
Jumper JP1 in position C	±200 mA

Specifications (continued)

Front panel test points:	
Tracking error monitor (TP1)	±10V DC full scale, short circuit protected
Output current monitor	1 mV/mA, short circuit protected
Edge connector monitor points:	
P.I.D. output monitor (pin B18)	±10V DC at 5 mA
Pre-amp output monitor (pin Z26)	±6V DC at 2 mA
Input bias	0 to ±10V DC
Output bias	0 to 12% of full scale output
Current limiters	0 to ±full scale output current
Dither:	
Amplitude	0 to 20% of full scale output current
Frequency	50 to 400 Hz
Proportional gain	0.1 to 20 V/V
Integral gain:	
Low range	0 to 40 V/V-sec
High range	2 to 300 V/V-sec
Derivative gain:	
Low range	0.05 to 0.2 V-sec/V
High range	0.3 to 2 V-sec/V
Pre-amp driver gain	1 to 15 V/V
Drift over operating temperature range	$<$±0.03% of full scale output at maximum gain
Operating temperature range	0 to 50°C (32 to 120°F)
Storage temperature range	–25 to 85°C (–15 to 185°F)
EEA-PAM-591-T-10 Additional Data	
Valve loop P gain	0.1 to 5.5 V/V
Valve loop D gain	0.05 to 0.2 V-sec/V
Valve loop bias	0 to ±10V
Valve loop feedback	0 to ±10V or 4 to 20 mA

© Vickers, Incorporated 1997
All Rights Reserved

Installation Dimensions

millimeters (inches)

EEA-PAM-591-A-10

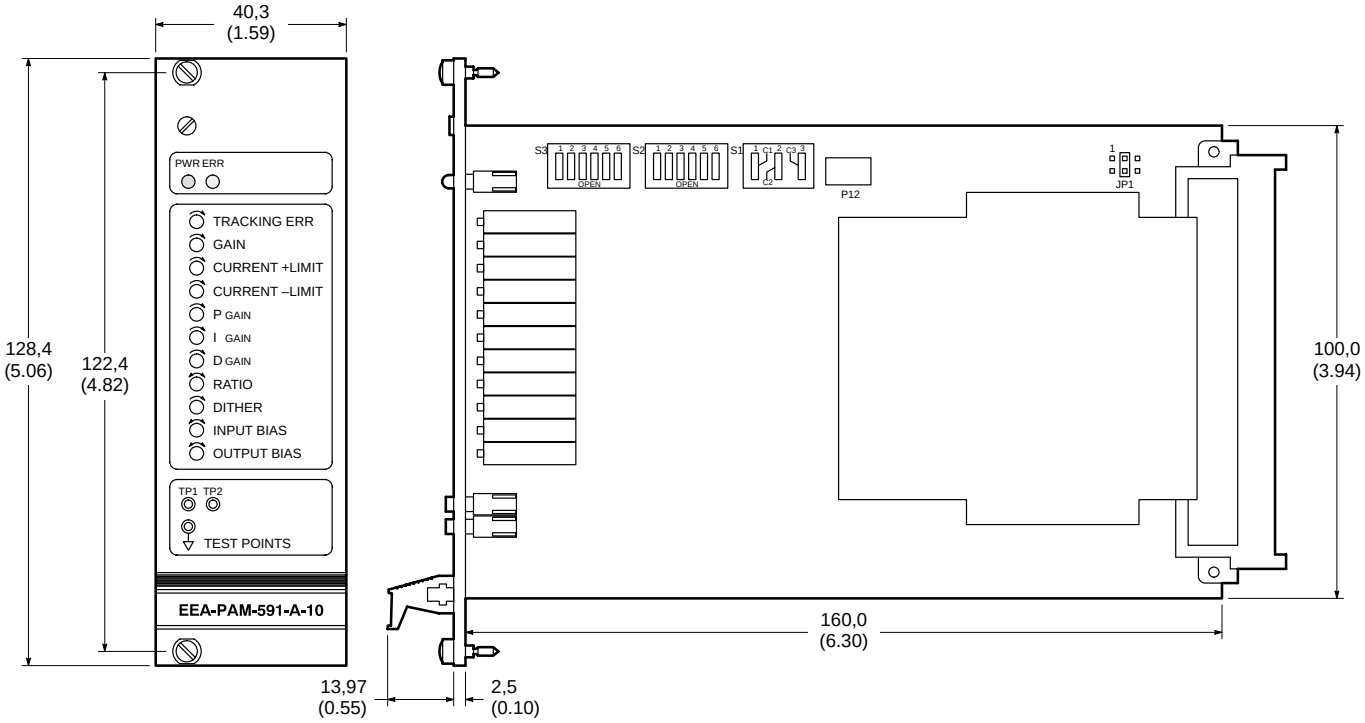

EEA-PAM-591-T-10

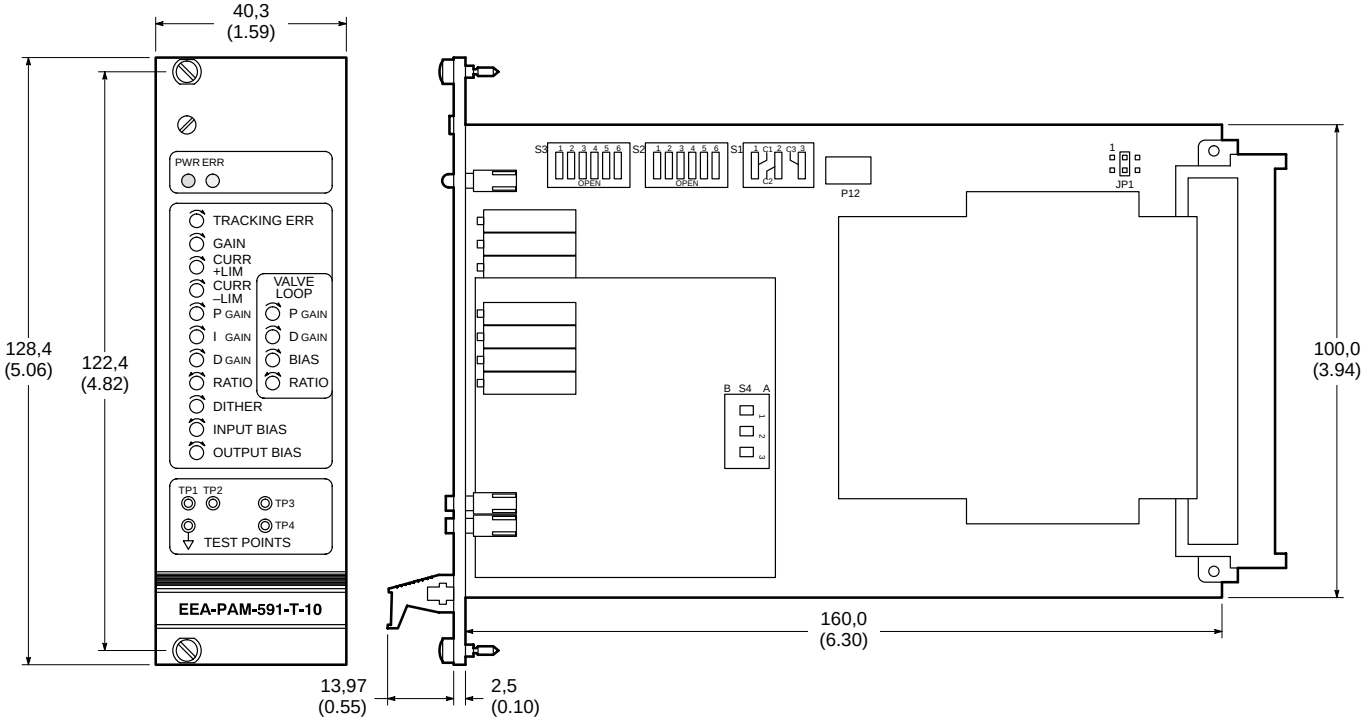

EEA Accessory Products

Cardholder Complying with DIN 41612

This cardholder (part number 02-104808) has a female connector type D32 and is designed for EEA cards with a standard DIN 41612 F48 interface. It can be permanently mounted and has screw terminals to ensure quick and secure wiring connections. When a card is inserted in the cardholder, a clip locks it in place.

Female Connector Complying with DIN 41612

This female connector (part number 508178) is a type 32 and mates with certain EEA cards. It is used when electronic cards are housed in a 19-inch rack and is fitted with connection pins for soldering.

Installation Dimensions

millimeters (inches)

Cardholder

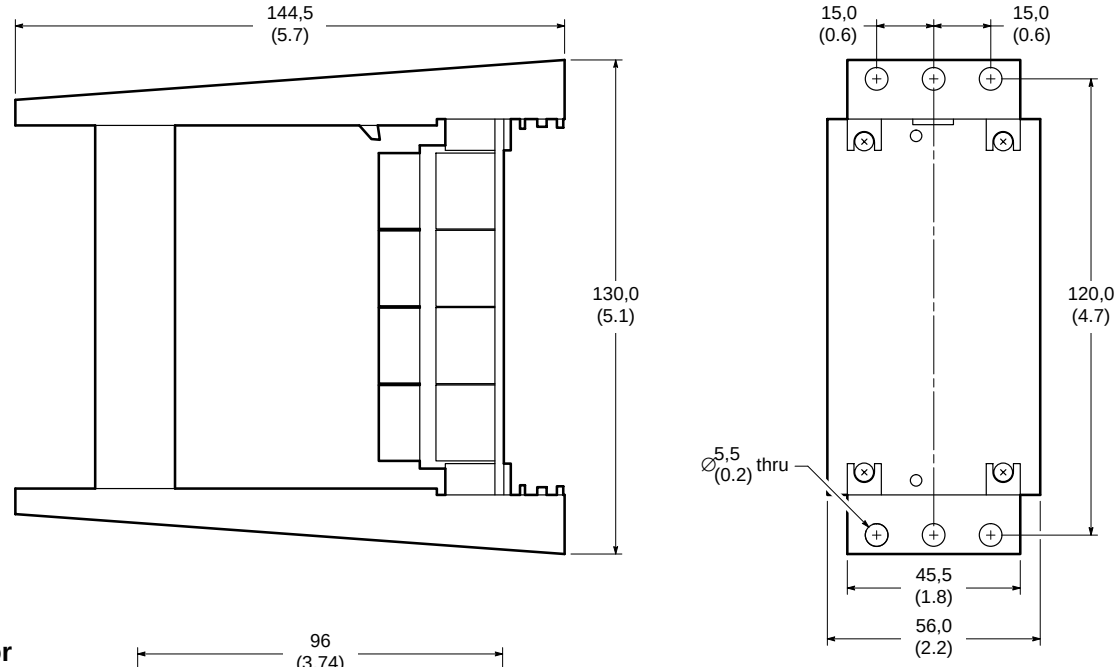

Female Connector

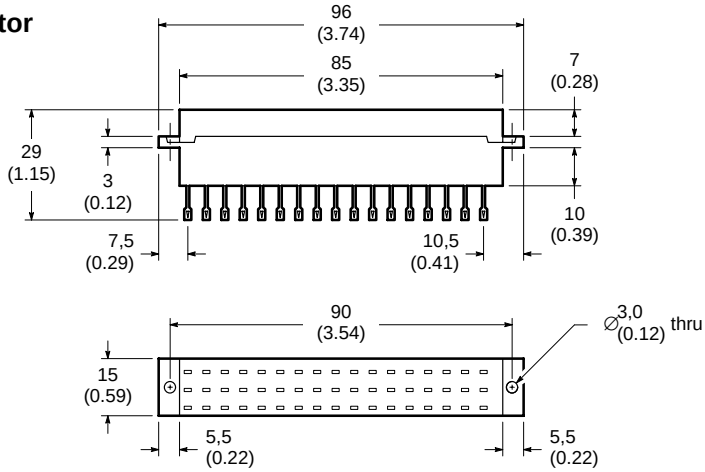

© Vickers, Incorporated 1997
All Rights Reserved

SMC 20H Two-Axis Hydraulic Position Controller

Operating Data

The SMC 20H is capable of controlling two simultaneous axes of motion using any combination of magnetostrictive or encoder position feedback devices. Data is entered using a hand-held terminal with a four-line liquid crystal display. The terminal cord has a standard 9-pin connector that plugs into the controller's front panel. Motion programs can be executed directly or from a memory that holds up to 1050 profiles.

Features and Benefits

- Simple menus (similar to bank ATMs) allow easy programming in English.
- Self contained power supply eliminates customer expense and extra wiring.
- Plug-in boards permit use with a variety of position sensors and eliminate the need for extra conditioning boards.
- The SMC 20H is capable of driving ±10V DC and ±50 mA devices simultaneously without modification.
- The unit's dual processor design permits high speed position tracking at speeds up to 100 IPS at resolutions of 0.0001".
- Permanent storage for up to 1050 programs eliminates the need for additional storage.
- The SMC 20H's PID control algorithm, with programmable dither, dual gain breaks, and direction sensitive gains for cylinders, makes it ideal for electric and hydraulic motion control applications, including rotary and linear positioning.

Front panel layout

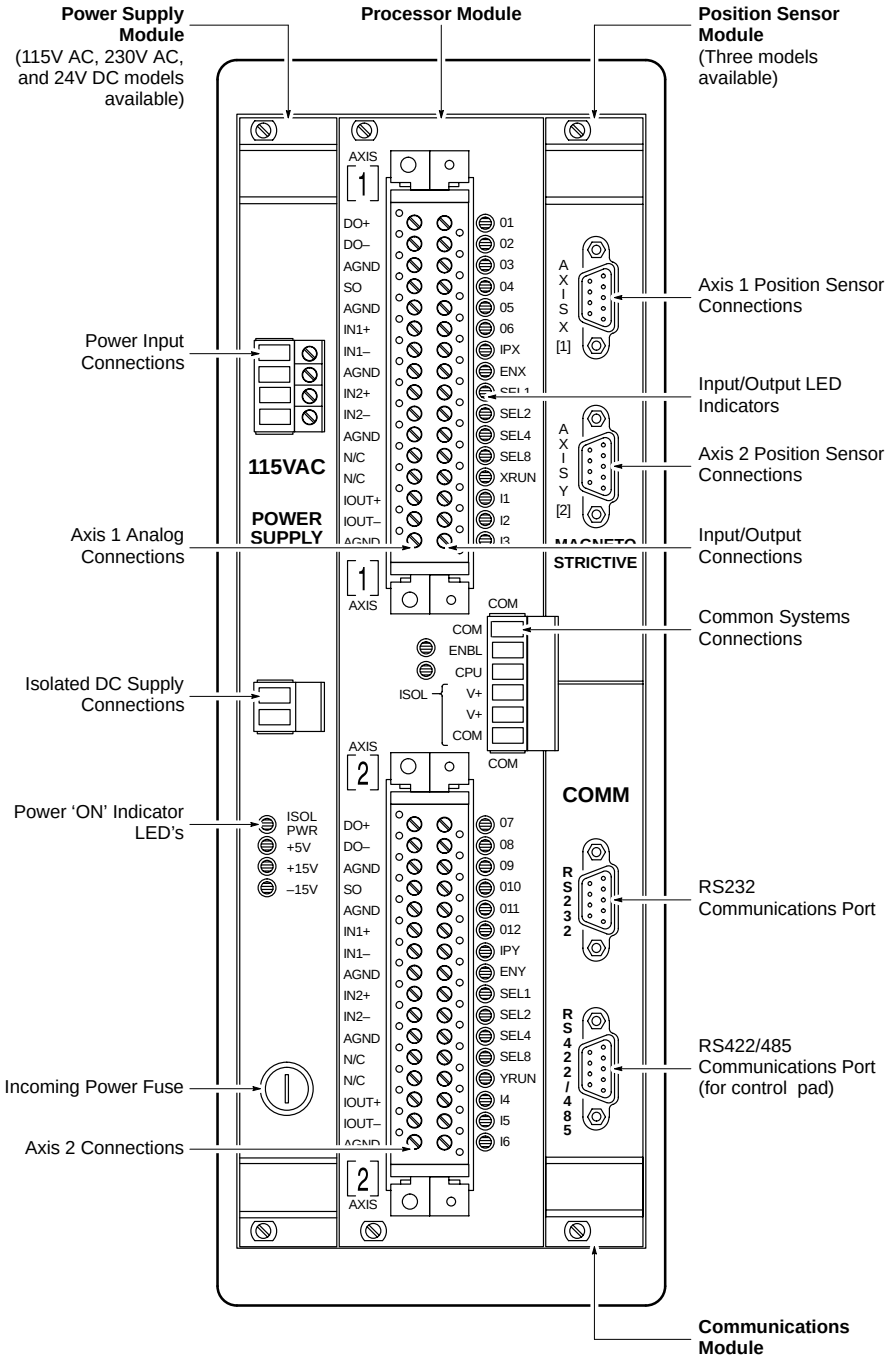

Specifications

Processor Type	Interface motion 80C188 with 64K RAM and 64K FLASH memory, TMS320C26 with 32K PROM and 2.0K RAM
Input/Output	
Analog voltage outputs	±10V DC single ended each axis ±10V DC differential each axis
Analog current output	±50 mA each axis standard
Digital input/output	±10V DC differential each axis
Type	Logic TRUE high or low
Current sourcing capability	5 mA (max.) at 5V DC 24 mA with external supply
Current sinking capability	2 mA
Electrical sensors	Power supply voltages 115/230V AC, 47 to 63 Hz, 2A (Optional +24V DC, 2A)
Serial Interface	
Protocols and connections	Standard ASCII
Ports	RS232C and RS422/485
Speed:	
RS232C	300 to 38.4K Baud
Hand-held terminal	9600 Baud
Settings	8 data bits, 2 stop bits, no parity
Environmental Conditions	
Temperature (operating and storage)	0 to 50°C (32 to 122°F)
Relative humidity	10 to 90%, non-condensing
Electrical noise immunity	NEMA 1cs 2.23 Surge per ANSI C-37.90A and IEEE472 5W transmitter at 1 ft, 27 to 450 MHz Electrostatic discharge 15,000 volts to ground
Vibration	5 to 10 Hz, 0.2”, peak to peak displacement, 10 to 200 Hz at 1G peak, MIL STD 810C
Shock	15G peak, 10 milliseconds
Mass (weight)	3,18 kg (7 lbs)

© Vickers, Incorporated 1997
All Rights Reserved

Typical Two-Axis Connector Wiring

Axis 1 (X)

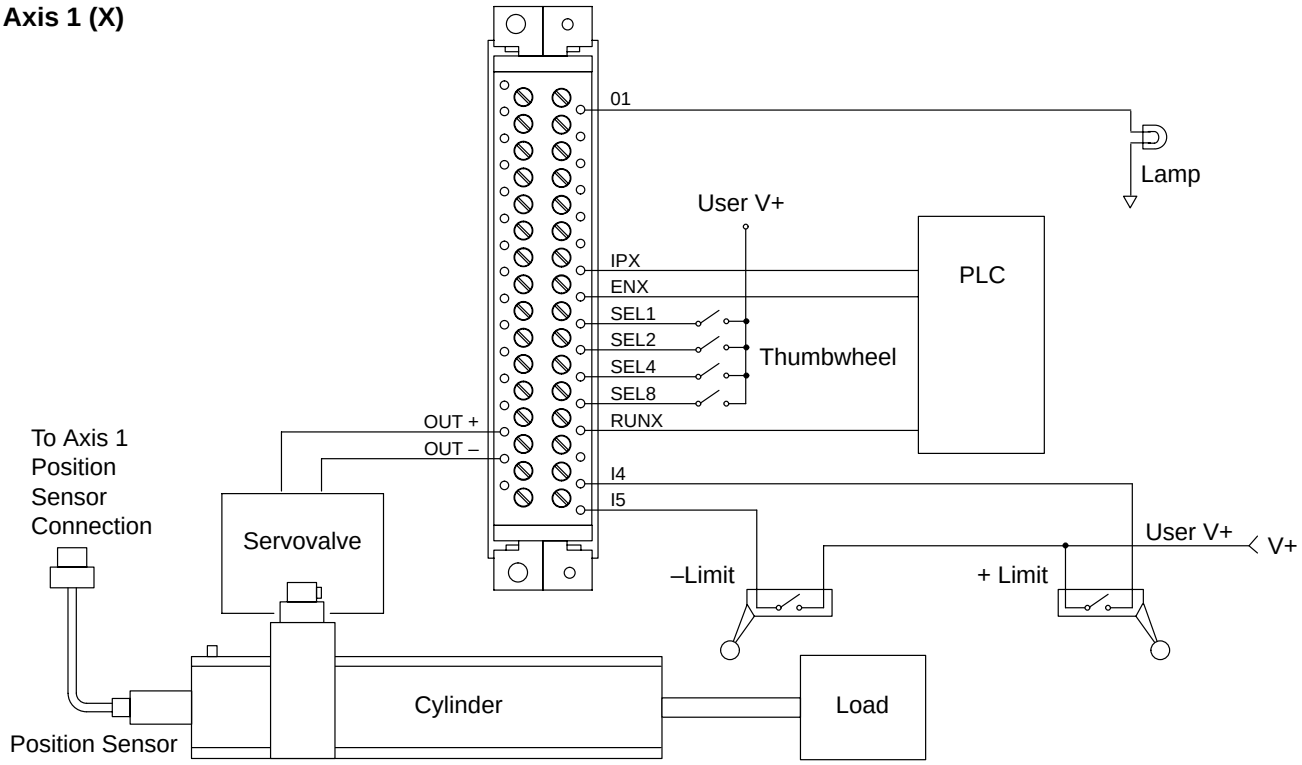

Axis 2 (Y)

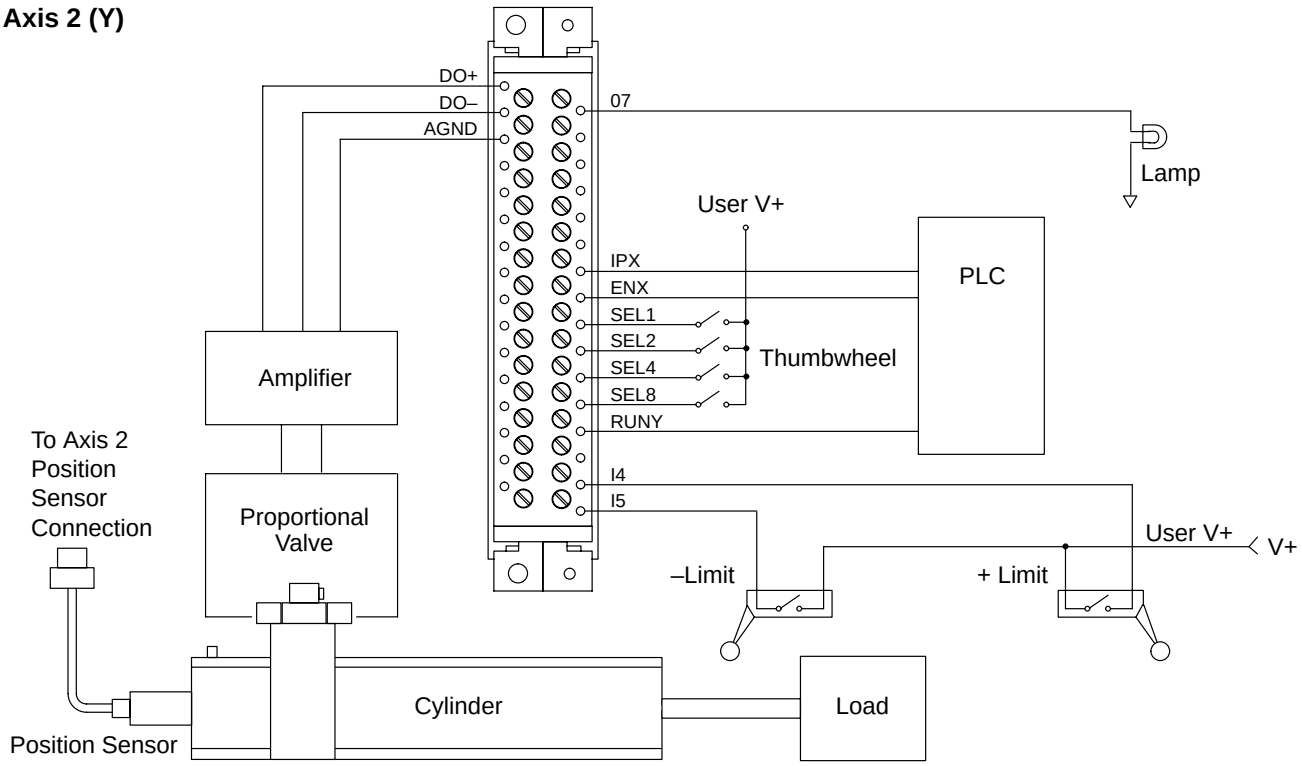

Model Code

SMC20H ************

1 2 3 4 5 6

1 Model series

SMC20H – Two-axis hydraulic position controller

2 Terminal

P – Hand-held terminal
N – None

3 I/O (input/output)

L08 – Low TRUE, DC, 8 in and 8 out per axis
H08 – High TRUE, DC, 8 in and 8 out per axis

4 Analog current

24 – ±24 milliamps
50 – ±50 milliamps
100 – ±100 milliamps

5 Feedback sensors

E2 – Two incremental encoder sensor channels
M2 – Two magnetostrictive sensor channels
EM – One incremental encoder sensor channel and one magnetostrictive sensor channel

6 Power input

115 – 90V to 125V AC, 50 or 60 Hz
230 – 200V to 240V AC, 50 or 60 Hz
24 – 24V DC, ±5%

© Vickers, Incorporated 1997
All Rights Reserved

Installation Dimensions

millimeters (inches)

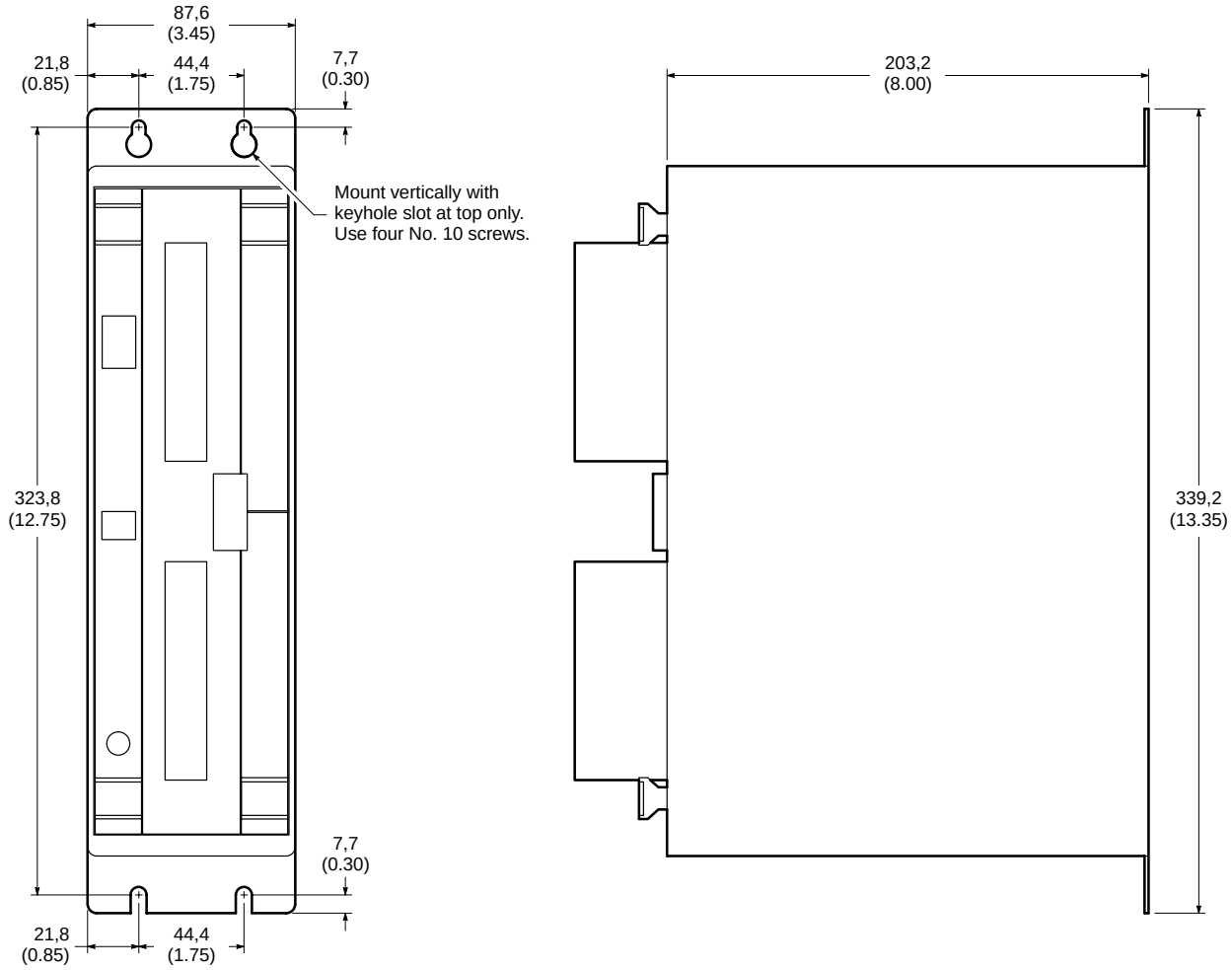

Eaton Hydraulics
15151 Highway 5
Eden Prairie, MN 55344
Telephone: 612 937-7254
Fax: 612 937-7130
www.eatonhydraulics.com

46 New Lane, Havant
Hampshire PO9 2NB
England
Telephone: (44) 170-548-6451
Fax: (44) 170-548-7110

© Eaton Hydraulics, Incorporated 2000
All Rights Reserved