Eaton ET3000 Portable Crimp System
Set-up and Operating Instructions

Powering Business Worldwide

Table of Contents

Important Safety Information . . . 3
ET3000 System Specifications & Equipment . . . 5
Optional Tooling & Kits . . . 7
Check-Out Procedure . . . 9
ET3000-HP Set-Up & Operating Instructions . . . 10
ET3000-AH Set-Up & Operating Instructions . . . 11
ET3000-EP Set-Up & Operating Instructions . . . 12
ET3000-TA Set-Up Operating Instructions . . . 13
Hose Preparation Instructions . . . 14
Spacer Ring & Nominal Crimp Location . . . 15
Crimp Diameter Measurement . . . 16
Repair & Replacement Items . . . 17
Warranty . . . 18

Important Safety Information

⚠ Warning

Selection of Hose

Selection of the proper Aeroquip® hose for the application is essential to the proper operation and safe use of the hose and related equipment. Inadequate attention to selection of the hose for your application can result in hose leakage, bursting, or other failure which can cause serious bodily injury or property damage from spraying fluids or flying projectiles. In order avoid serious bodily injury or property damage resulting from selection of the wrong hose, you should carefully review the information in this catalog. Some of the factors which are involved in the selection of the proper hose are:

- hose size
- hose length
- hose ends
- fluid conveyed
- bends
- temperature
- hose pressure
- static head pressure
- installation design

These factors and the other information in this catalog should be considered when selecting the proper hose for your application. Further information on proper hose selection is found in the Aeroquip Master Hose Assembly Catalog.

Proper Selection of Hose Ends

Selection of the proper Aeroquip fittings for the hose end application is essential to the proper operation and safe use of the hose and related equipment. Inadequate attention to the selection of the end fittings for your application can result in hose leakage, bursting, or other failure which can cause serious bodily injury, property damage from spraying fluids or flying projectiles. In order to avoid serious bodily injury or property damage resulting from selection of the wrong hose and fitting, carefully review the information in this catalog. Some of the factors which are involved in the selection of the proper hose ends are:

- fluid compatibility
- temperature
- installation design
- hose size
- corrosion requirements
- fluids conveyed

These factors and the other information in this catalog should be considered when selecting the proper hose end fitting for your application.

Hose Installation

Proper installation of the hose is essential to the proper operation and safe use of the hose and related equipment. Improper installation of the hose can result in serious injury or property damage caused by spraying fluids or flying projectiles. In order to avoid serious bodily injury or property damage resulting from improper installation of the hose, you should carefully review the information in this set-up guide and in the Aeroquip Master Hose Assembly Catalog. Some of the factors you must consider in installing the hose properly are:

- changes in length
- protection from high temperature sources
- twisting
- proper bend radius
- elbows and adapters to relieve strain
- rubbing or abrasion
- improper hose movement

These factors and the other information in this catalog regarding hose installation should be considered by you before installing the hose. Refer to the Aeroquip Master Hose Assembly Catalog for further information on proper hose selection.

Hose Maintenance

Proper maintenance of the hose is essential to the safe use of the hose and related equipment Hose should be stored in a dry place. Hose should also be visually inspected. Any hose that has a cut or gouge in the cover that exposes the reinforcement should be retired from service. Hoses should also be inspected for kinking or broken reinforcement. Inadequate attention to maintenance of the hose can result in hose leakage, bursting, or other failure which can cause serious bodily injury or property damage from spraying fluids, flying projectiles, or other substances. Refer to the Aeroquip Master Hose Assembly Catalog for information on proper hose maintenance.

Hose and Field Attachable Hose Ends

Aeroquip Hose and Field Attachable Hose Ends have been engineered and designed as a complete hose assembly system. Component compatibility along with the use of quality components insures the production of reliable hose assemblies when assembled property. The use or intermixing of ends and hose not specifically engineered and designed for use with each other may result in the production of unsafe or unreliable hose assemblies. This can result in hose assembly leakage, hose separation or other failures which can cause serious bodily injury or property damage from spraying fluids, flying projectiles, or other substances. The Aeroquip limited warranty only applies only when Field Attachable Hose Ends are used on the compatible Aeroquip hose.

Aeroquip Hose, Hose Ends and Assembly Equipment Compatibility

The ET3000 Equipment Package, Hose Ends and Hose have been engineered and designed as a compelte hose assembly system. Each component of the ET3000 assembly system is compatible with other components to which it relates. Component compatibility, along with the use of quality components, insures the production of reliable hose assemblies when assembled properly. The use or intermixing of fittings and hose not specifically engineered and designed for use with each other and equipment is not recommended and may result in the production of unsafe or unreliable hose assemblies. This can result in hose assembly leakage, hose separation or other failures which can cause serious bodily injury or property damage from spraying fluids, flying projectiles, or other substances. The Aeroquip limited warranty only applies when Aeroquip Hose Ends and compatible Aeroquip Hose are used with Aeroquip assembly equipment.

System Specifications & Equipment

ET3000-HP*
Portable Crimp Press & Hand Pump Package

Capacity
1/4" through 1¼" one and two wire braid MatchMate hose, 3/8" through 1¼" four spiral MatchMate hoses, 3/8" through 1" Teflon hoses, 3/8" through 1" thermoplastic hoses

Mounting
Free Standing Base

Size
22-1/2" high, 14" long, 10-1/2" wide

Total Weight
112 lbs.

T-480-2 Pump Specifications:

Dimensions
7-3/16" high, 21-1/64" long, 4-3/4" wide

Pressure
0-10,000 psi

Outlet Port Size
3/8" NPT

Reservoir Capacity
55 cu. in.

Hydraulic Oil
Enerpac

*Includes T-480-68 Blue pusher extension ring and should be used with ET3000 Portable Crimp Machines when no spacer ring is called out.

ET3000-AH*
Portable Crimp Press & Air/ Hydraulic Pump Package

Capacity
1/4" through 1¼" one and two wire braid MatchMate hose, 3/8" through 1¼" four spiral MatchMate hoses, 3/8" through 1" Teflon hoses, 3/8" through 1" thermoplastic hoses

Mounting
Free Standing Base

Size
22-1/2" high, 14" long, 10-1/2" wide

Total Weight
124 lbs.

T-482-2 Pump Specifications:

Dimensions
5" high, 14-5/8" long, 5-5/8" wide

Pressure
0-10,000 psi

Outlet Port Size
3/8" NPT

Inlet Port
1/4" NPT

Pump Inlet Air Pressure
60-100 psi

Reservoir Capacity
36 cu. in.

Hydraulic Oil
Enerpac

Note: It is recommended that a filter, regulator, lubricator, and air pressure gauge be installed upstream from the pump. Filter, regulator, and lubricator units are not included.

*Includes T-480-68 Blue pusher extension ring and should be used with ET3000 Portable Crimp Machines when no spacer ring is called out.

Crimp Manchines

ET3000-TA*
Portable Crimp Press and Turbo Air/Hydraulic Pump Package

Capacity
¼" through 1¼" one and two wire braid MatchMate hose, 3/8" through 1¼" four spiral MatchMate hoses, 3/8" through 1" Teflon hoses, 3/8" through 1" thermoplastic hoses

Mounting
Free Standing Base

Size
22-1/2" high, 14" long, 10-1/2" wide

Total Weight
116 lbs.

T-480-3 Pump Specifications:

Dimensions
8-1/4" high, 12-3/8" long, 8" wide

Pressure
0-10,000 psi

Outlet Port Size
3/8" NPT

Inlet Port
1/4" NPT

Pump Inlet Air Pressure:
40-150 psi

Reservoir Capacity
150 cu. in.

Hydraulic Oil
Enerpac

Note: It is recommended that a filter, regulator, lubricator, and air pressure gauge be installed upstream from the pump. Filter, regulator, and lubricator units are not included.

*Includes T-480-68 Blue pusher extension ring and should be used with ET3000 Portable Crimp Machines when no spacer ring is called out.

ET3000-EP*
Portable Crimp Press and 110v Electric Pump Package

Capacity
¼" through 1¼" one and two wire braid MatchMate hose, 3/8" through 1¼" four spiral MatchMate hoses, 3/8" through 1" Teflon hoses, 3/8" through 1" thermoplastic hoses

Mounting
Free Standing Base

Size
22-1/2" high, 14" long, 10-1/2" wide

Total Weight
134 lbs.

T-481-110 Pump Specifications:

Electrical Power Source
15amp, 110v grounded 1Ph 50/60HZ

Dimensions
14-1/4" high, 9-5/8" long, 9-5/8" wide

Pressure
0-10,000 psi

Outlet Port Size
3/8" NPT

Reservoir Capacity
115.5 cu. in.

Hydraulic Oil
Enerpac

Flow
.5 to 1.0 gpm

Motor Rating
1/2 hp universal, 9 amps at 10,000 psi

*Includes T-480-68 Blue pusher extension ring and should be used with ET3000 Portable Crimp Machines when no spacer ring is called out.

Optional Tooling & Kits

ET3000TP-0001

TTC and TTC12 Tooling Package (GH663, GH120, GH194, GH195, GH781, FC735, GH793, FC735, GH493 & FC736)*

Kit includes one each of the following:

Part Number	Description	Color
ET1000SR-M315A	Spacer Ring	Orange
T-400-38	Spacer Ring	Red
ET1000SR-M265D	Spacer Ring	Black
ET1000SR-M115D	Spacer Ring	Yellow
ET1000SR-M100A	Spacer Ring	Purple
T-400-46R	Spacer Ring	Tan
ET1000SR-M190D	Spacer Ring	Lt. Green
T-400-112	Spacer Ring	Tan
ET420SR-M495A	Spacer Ring	Brown
ET420SR-M255A	Spacer Ring	Black / Grey
T-420-29	Spacer Ring	Orange
T-420-82R	Spacer Ring	Blue
ET1000DC-M500S	Collet Ass'y	
ET1000DC-M320S	Collet Ass'y	
ET1000DC-M295S	Collet Ass'y	
ET1000DC-M250S	Collet Ass'y	
ET1000DC-M390S	Collet Ass'y	
ET1000DC-M430S	Collet Ass'y	
ET400DC-M195S	Collet Ass'y	
ET400DC-M230S	Collet Ass'y	
ET400DC-M150S	Collet Ass'y	

ET3000TP-0002

TTC ONLY Tooling Package (GH663, GH120, GH194, GH195, GH781, FC735 & GH793)*

Kit includes one each of the following:

Part Number	Description	Color
ET1000SR-M265D	Spacer Ring	Black
ET1000SR-M115D	Spacer Ring	Yellow
ET1000SR-M100A	Spacer Ring	Purple
T-400-46R	Spacer Ring	Tan
ET1000SR-M190D	Spacer Ring	Lt. Green
T-400-112	Spacer Ring	Tan
ET420SR-M495A	Spacer Ring	Brown
ET420SR-M255A	Spacer Ring	Black / Grey
T-420-29	Spacer Ring	Orange
T-420-82R	Spacer Ring	Blue
ET1000DC-M295S	Collet Ass'y	
ET1000DC-M250S	Collet Ass'y	
ET1000DC-M390S	Collet Ass'y	
ET1000DC-M430S	Collet Ass'y	
ET400DC-M195S	Collet Ass'y	
ET400DC-M230S	Collet Ass'y	
ET400DC-M150S	Collet Ass'y	

* Crimp Specification found on Eaton.com/Hydraulics

Optional Tooling & Kits

ET3000TP-0003

TTC12 ONLY Tooling Package (GH493 & FC736)*
Kit includes one each of the following:

Part Number	Description	Color
ET1000SR-M315A	Spacer Ring	Orange
T-400-38	Spacer Ring	Red
ET1000SR-M265D	Spacer Ring	Black
ET1000SR-M190D	Spacer Ring	Lt. Green
ET1000DC-M500S	Collet Ass'y	
ET1000DC-M320S	Collet Ass'y	
ET1000DC-M295S	Collet Ass'y	
ET1000DC-M250S	Collet Ass'y	
ET400DC-M230S	Collet Ass'y	
ET1000DC-M430S	Collet Ass'y	

ET3000TP-0004

"E" Series PTFE Hose Tooling Package (STW, SCTW, 2807 & FC465)*
Kit includes one each of the following:

Part Number	Description	Color
T-400-38	Spacer Ring	Red
ET1000SR-M215A	Spacer Ring	Majenta
T-400-62	Spacer Ring	Yellow
T-400-10	Spacer Ring	Black
T-400-5C	Collet Ass'y	
T-400-4C	Collet Ass'y	
T-400-40C	Collet Ass'y	
T-400-2C	Collet Ass'y	
T-400-120C	Collet Ass'y	
ET1000DC-M065S	Collet Ass'y	

ET3000TP-0005

TTC Thermoplastic Hose w/ FF91064 Sleeve Tooling Package (3130, 3740, 3R82, 3E82, 3R80 & 3E80)*
Kit includes one each of the following:

Part Number	Description	Color
ET420SR-M215A	Spacer Ring	Black / Majenta
T-400-46R	Spacer Ring	Black / Tan
ET1000SR-M115D	Spacer Ring	Yellow
T-400-62	Spacer Ring	Yellow
T-400-37	Spacer Ring	Green
ET1000DC-M390S	Collet Ass'y	
ET1000DC-M295S	Collet Ass'y	
T-400-42C	Collet Ass'y	
ET400DC-M195S	Collet Ass'y	
T-400-121C	Collet Ass'y	

* Crimp Specification found on Eaton.com/Hydraulics

Check-Out Procedure

Check for proper oil level in the power unit. The oil reservoirs in all power units have been filled at the factory; however, if oil is required, refer to the instruction sheet provided with each unit for proper hydraulic oil and filling procedure. It is recommended that you follow the procedure below for your specific model of crimper before making any hose assemblies. For models ET3000-TA and ET3000-EP, the hose assembly will need to be connected. Assemble coupler nipple into straight elbow and o-ring adapter and assemble into press. Assemble female half of coupler to hose assembly and threads. Adapter into pump and connect hose assembly. Use pipe thread compound on all pipe threads.

Caution: Throughout this procedure, check the power unit and all threaded connections for any leaks and tighten as necessary.

ET3000-HP

Note the following steps must be performed without tooling in the press.

1. Turn vent/fill cap to "vent" position to vent reservoir.
2. Open release valve and operate handle until the pusher has fully extended.
3. Release control valve allowing the pusher to retract.
4. Repeat steps 2 and 3 approximately six times which will help purge air from the system.

ET3000-AH

1. Connect air supply to the 1/4" NPT port on pump recommended air inlet pressure is 60-100 psi to ensure a long service life. It is recommended that a filter, regulator, lubricator and gauge be installed in the air line.
2. Turn on air supply and adjust to recommended inlet pressure.

Note the following steps must be performed without tooling in the press.

3. Push down pressure valve allowing the pusher to fully extend.
4. Release pressure valve allowing pusher to retract and purge any air from the system.
5. Repeat steps 3 and 4 until air has been purged. When pusher extends fully and retracts without hesitation the air has been completed vented from the system.
6. Turn off air supply.

ET3000-TA

1. Connect air supply to the 1/4" NPT port on pump recommended air inlet pressure is 100-125 PSI. To ensure a long service life. It is recommended that a filter, regulator, lubricator and gauge be installed in the air line.
2. Turn on air supply and adjust to recommended inlet pressure.

Note the following steps must be performed without tooling in the press.

3. Vent pump reservoir by opening vent screw.
4. Push down pressure valve allowing the pusher to fully extend.
5. Push down on release end of treadle allowing pusher to retract and purge any air from the system.
6. Repeat steps 4 and 5 until air has been purged. When pusher extends fully and retracts without hesitation the air has been vented from the system.
7. Turn off air supply.

ET3000-EP

1. Connect power cord to suitable 15 amp, 120V grounded single phase circuit.
2. Open vent plug on reservoir.
3. Turn pump switch located on side of shroud to "on" position.

   Note the following steps must be performed without tooling in the press.

4. Press pendant switch and hold until pusher fully extends.
5. Release pendant switch allowing pusher to retract.
6. Repeat steps 4 and 5 until air has been purged. When pusher extends fully and retracts without hesitation, the air has been vented from the system.
7. Turn pump switch to "off" position.

1. Pump reservoir must be properly vented before operation. Release the pusher clip and slide pusher back. Note: periodically lubricate the die ring with Eaton T-400-G lubricant. When crimping with Eaton tooling insert the T-420-25 adapter die ring into the base plate. Insert the proper sized collet.

2. Select the proper Aeroquip hose and end fitting. Insert the hose into the end fitting making sure that the hose is bottomed into the end fitting. For insertion depth information, reference figure on page 14.

3. Loosen knob and tilt press as necessary. Insert hose assembly from below the base plate and between the collet halves. Align crimp scribe line on end fitting with top of collet, making sure that collect halves are evenly matched.

4. Holding uncrimped hose assembly in place, reference Hose End and Tool Selector Chart found in Product Advisor for correct spacer ring. Note: when crimping hose that does not require a stepped spacer ring, the T-480 -68 pusher extension must be used to prevent damage to the pusher. Position spacer ring on top of collet with proper side of spacer ring facing up as shown on page 15 and slide pusher forward, making sure pusher clip has locked.

5. Close release valve.

6. Operate pump handle until spacer ring contacts the base plate indicating that the crimp is complete. Open the release valve to retract pusher. Release the pusher clip and slide the pusher back to access tooling. Remove the spacer ring and the crimped hose assembly from below the base plate and between the collet halves. Note: visually inspect the crimped end. Check the nominal crimp diameter and verify that the crimp is within specification, see page16.

ET3000-AH Set-Up & Operating Instructions

1. Pump reservoir must be properly vented before operation. Release the pusher clip and slide pusher back. Note: periodically lubricate the die ring with Eaton T-400-G lubricant. When crimping with Eaton tooling insert the T-420-25 adapter die ring into the base plate. Insert the proper sized collet.

2. Select the proper Aeroquip hose and end fitting. Insert the hose into the end fitting making sure that the hose is bottomed into the end fitting. For insertion depth information, reference figure on page 14.

3. Loosen knob and tilt press as necessary. Insert hose assembly from below the base plate and between the collet halves. Align crimp scribe line on end fitting with top of collet, making sure that collect halves are evenly matched.

4. Holding uncrimped hose assembly in place, reference Hose End and Tool Selector Chart found in Product Advisor for correct spacer ring. Note: when crimping hose that does not require a stepped spacer ring, the T-480 -68 pusher extension must be used to prevent damage to the pusher. Position spacer ring on top of collet with proper side of spacer ring facing up as shown on page 15 and slide pusher forward, making sure pusher clip has locked.

5. Attach air supply and depress pressure valve and hold until spacer ring contacts the base ring, indicating that the crimp is complete.

6. Release pressure valve to retract pusher. Release the pusher clip and slide the pusher back to access tooling. Remove the spacer ring and the crimped hose assembly from below the base plate and between the collet halves. Note: visually inspect the crimped end. Check nominal crimp diameter and verify that the crimp is within specification see Page 16.

1. Open vent plug on reservoir before operation. Release the pusher clip and slide pusher back. Note: periodically lubricate the die ring with Eaton T-400-G lubricant. When crimping with Eaton tooling insert the T-420-25 adapter die ring into the base plate. Insert the proper sized collet.

2. Select the proper Aeroquip hose and end fitting. Insert the hose into the end fitting making sure that the hose is bottomed into the end fitting. For insertion depth information, reference figure on page 14.

3. Loosen knob and tilt press as necessary. Insert hose assembly from below the base plate and between the collet halves. Align crimp scribe line on end fitting with top of collet, making sure that collet halves are evenly matched.

4. Holding uncrimped hose assembly in place, reference Hose End and Tool Selector Chart found in Product Advisor for correct spacer ring. Note: when crimping hose that does not require a stepped spacer ring, the T-480 -68 pusher extension must be used to prevent damage to the pusher. Position spacer ring on top of collet with proper side of spacer ring facing up as shown on page 15 and slide pusher forward, making sure pusher clip has locked.

5. Press pump switch to the top detent "ON" position. Press pendant switch and hold until the spacer ring contacts the base ring, indicating the crimp is complete.

6. Release pendant switch to retract pusher and move pump switch to the middle "OFF" position. Release the pusher clip and slide the pusher back to access tooling. Remove the spacer ring and the crimped hose assembly from below the base plate and between the collet halves. Note: visually inspect the crimped end. Check nominal crimp diameter and verify that the crimp is within specification, on page 16.

ET3000-TA Operating Instructions

1. Open vent plug on reservoir before operation. Release the pusher clip and slide pusher back. Note: periodically lubricate the die ring with Eaton T-400-G lubricant. When crimping with Eaton tooling insert the T-420-25 adapter die ring into the base plate. Insert the proper sized collet.

2. Select the proper Aeroquip hose and end fitting. Insert the hose into the end fitting making sure that the hose is bottomed into the end fitting. For insertion depth information, reference figure on page 14.

3. Loosen knob and tilt press as necessary. Insert hose assembly from below the base plate and between the collet halves. Align crimp scribe line on end fitting with top of collet, making sure that collet halves are evenly matched.

4. Holding uncrimped hose assembly in place, reference Hose End and Tool Selector Chart found in Product Advisor for correct spacer ring. Note: when crimping hose that does not require a stepped spacer ring, the T-480 -68 pusher extension must be used to prevent damage to the pusher. Position spacer ring on top of collet with proper side of spacer ring facing up as shown on page 15 and slide pusher forward, making sure pusher clip has locked.

5. Attach air supply and depress pressure end of treadle and hold until spacer ring contacts the base ring indicating that the crimp is complete.

6. Depress the release end of treadle to retract pusher. Release the pusher clip and slide the pusher back to access tooling. Remove the spacer ring and the crimped hose assembly from below the base plate and between the collet halves. Note: visually inspect the crimped end. Check nominal crimp diameter and verify that the crimp is within specification on Page 16.

Hose Preparation Instructions
TTC and TTC12 Crimp Style Fittings

Select a matching hose and fitting combination from the current Aeroquip Master Hose Assembly Catalog.

Step 1: Cut the Hose

Cut the hose squarely and to the proper length using a suitable cut off saw. The cut angle must not exceed 5°. Read the saw operation manual for cutting instructions and blade applications.

Step 2: Clean the Hose Bore

Using the FT1355-01 Jet-cleaner or hose compatible solvent, bottle brush, and compressed air to, flush contaminants from the hose bore. Follow shop safety rules.

Step 3: TTC,TTC12: Insert the Fitting into the Hose

To determine the fitting insertion depth, use the appropriate FF90308 hose insertion gage or align the end of the hose with the scribe line (located on socket taper) and mark the hose where the gage or socket ends. Insert the fitting into the hose until the bottom of the socket is aligned with the mark on the hose or it bottoms out.

Step 4: Crimp the Fitting

Crimp the fitting then measure the crimp diameter, ovality dimension and inspect the nipple/socket position.

Step 5: Plug or cap the hose end fittings as required.

Spacer Ring and Nominal Crimp Location

Spacer Ring

Typical spacer ring illustrating both sides of ring

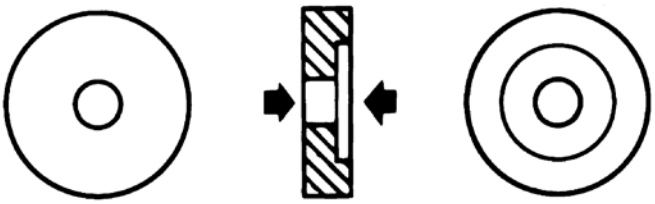

Flat Side Counterbore Side

Maintenance

Collect Assembly Lubrication	Every 30 crimps = Re-lubricate sliding surface of dies Every 250 crimps = Remove old grease and re-lubricate
Collect Assembly Lubrication	Every 250 crimps = Remove old grease and re-lubricate Every 1,000 crimps = Remove old grease, inspect for wear or damage and re-lubricate if okay.

TTC & TTC 12 Crimp Location
+/- 030 from Scribe Line

How to Measure Crimp Diameters

Crimp Diameter Measurement Locations

Diameter measurements are to be taken at the center (top to bottom, side to side) of the specified fitting section.

Note: The example and drawing on this page show an Aeroquip MatchMate Plus fitting.

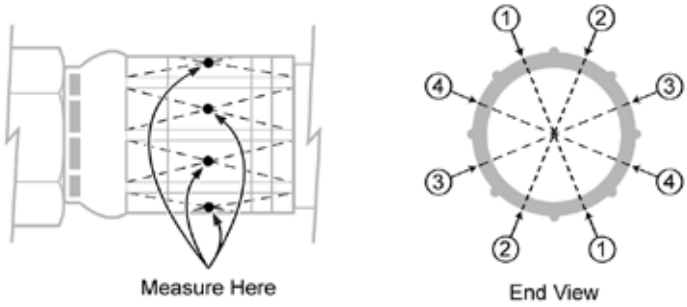

Crimp Diameter Measurement Location

Crimp Diameter

The crimp diameter is the average of the four diameter measurements around the fitting. These measurements are to be taken at the same relative locations indicated in the illustration above.

Note: Eaton defines the crimp diameter as the average of four measurements, not just one measurement (see the "End View" illustration above).

$$\frac{\text{Measurement 1 + Measurement 2 + Measurement 3 + Measurement 4 = Crimp Diameter}}{4}$$

Crimp Ovality

Crimp ovality is the largest diameter measurement minus the smallest diameter measurement.

Example

GH781-12 hose with a 1AA12FJ12 fitting measures:

Measurement 1 = **31,57mm (1.243 in.)**

Measurement 2 = **31,60mm (1.244 in.)**

Measurement 3 = **31,65mm (1.246 in.)**

Measurement 4 = **31,65mm (1.246 in.)**

$$\textbf{Crimp Diameter} = \frac{\text{31,51mm (1.243in) + 31,60mm (1.244in) + 31.65mm (1.246in) + 31.65mm (1.246in)}}{4} = \textbf{31,62mm (1.245in)}$$

Crimp Ovality = 31.65mm (1.246in) – 31.57mm (1.243in) = **0,08mm (0.003in)**

Repair and Replacement Items

ET3000 • Portable Machine Crimp Repair and Replacement Items

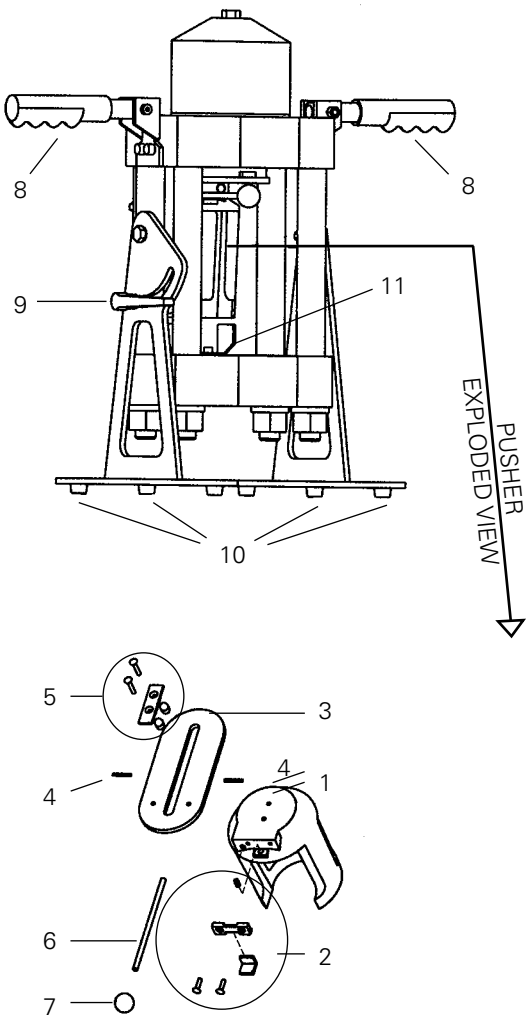

Item Number	Part Number	Description
1	T-480-P	Pusher
2	T-480-PSK	Pusher Stop Repair Kit (Includes pusher clip, 2 machine screws, pusher stop and spring)
3	T-480-SP	Slider Plate
4	140-05485-01	Roll Pin
5	T-480-SFK	Slide Flange Kit (Includes slide flange, 2 bushings and 2 machine screws)
6	T-480-SPR	Slide Pull Rod
7	T-480-SPK	Slide Pull Knob
8	140-06601	Vinyl Grip
9	T-480-TBK	Tilt Bracket Knob
10	140-06894	Foot Pad
11	T-480-69	Tool Locator Bracket
#	T-480-16	10,000 PSI replacement hose assembly for 480-HP
#	T-480-17	10,000 PSI replacement hose assembly for T-480-TA and T-480-EP
#	T-480-18	10,000 PSI replacement hose assembly for 480-AH
#	140-06906	Hydraulic Quick Coupler used with the T-480-TA and T-480-EP System
#	T-480-3	Turbo Air/Hydraulic replacement pump for T-480-TA System
#	T-481-110	Electric replacement pump for T-480-EP System
#	T-480-2	Hand replacement pump for T-480-HP System
#	T-482-2	Air/Hydraulic replacement pump for T-480-AH System

Item not illustrated in parts breakdown.

For proper assembly instructions, please review the Eaton ET3000 Crimp video on www.Eaton.com/hydraulics

Warranty

Eaton Hydraulics warranty policy is located at www.hydraulics.eaton.com/warranty

Eaton
Hydraulics Group USA
14615 Lone Oak Road
Eden Prairie, MN 55344
USA
Tel: 952-937-9800
Fax: 952-294-7722
www.eaton.com/hydraulics

Eaton
Hydraulics Group Europe
Route de la Longeraie 7
1110 Morges
Switzerland
Tel: +41 (0) 21 811 4600
Fax: +41 (0) 21 811 4601

Eaton
Hydraulics Group Asia Pacific
Eaton Building
4th Floor, No. 3 Lane 280
Linhong Rd.
Changning District
Shanghai 200335
China
Tel: (+86 21) 5200 0099
Fax: (+86 21) 5200 0400

Powering Business Worldwide

© 2012 Eaton Corporation
All Rights Reserved
Printed in USA
Document No. E-EQCR-TM008-E
May 2012