This one-piece Eaton® Fuller®Roadranger™ Shift Knob updates your air system to the latest technology. Three versions of the newly-designed shift knob are now available in kit form for easy conversion. See the information below for the correct kit number for your transmission model.

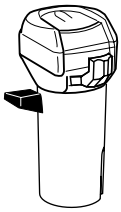

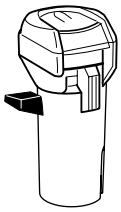

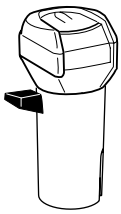

K-2013. Kit K-2013 comes complete with an A-4900 shift knob, installation instructions, and all necessary hardware. It replaces both the range and selector valve and requires no modification to your transmission. Just remove the current valve, cut air lines and install. The K-2013 is for use with the following model series:

9513 12513 15613 11613 14613

K-2015. Kit K-2015 comes complete with an A-5015 shift knob, installation instructions, and all necessary hardware. It replaces both the range and deep reduction valve, but requires changing the reduction cylinder cover and re-routing the reduction air lines. The K-2015 is for use with the following model series:

958LL	**915**	**1157DLL**	**11607LL**
11608LL	**11615**	**1258LL**	**12515**
14608LL	**14615**	**15615**	

K-2030. Kit K-2030 comes complete with an A-5015 shift knob, installation instructions, and all necessary hardware. It replaces the selector valve, but requires changing the reduciton cylinder cover. The K-2030 is for use with the following model series:

613 6613

K-2010. Kit K-2010 comes complete with an A-5010 shift knob, installation instructions, and all necessary hardware. It replaces the range valve on the 6, 7DL, 7L, 8, 9 and 10 speed Roadranger Transmissions, and the range valve only on the 7DLL, 7LL, 8LL, and 15 speed transmissions. No modification is necessary to your transmission. Just remove the current valve, cut air lines and install. The K-2010 is for use with the following model series:

610	**910**	**1157DL**	**11509**
9509	**11607L**	**11608**	**11609**
1110	**12509**	**12510**	**12609**
11610	**14608**	**14609**	**14610**
12610	**8609**	**906**	**9508**
6610			

The K-2010 replaces the range valve only on the model numbers listed below. To replace both the range and deep reduction valve, see Kit K-2015.

958LL	**12515**	**11608LL**	**15615**
11607LL	**14615**	**1258LL**	**1157DLL**
11615	**915**	**14608LL**	

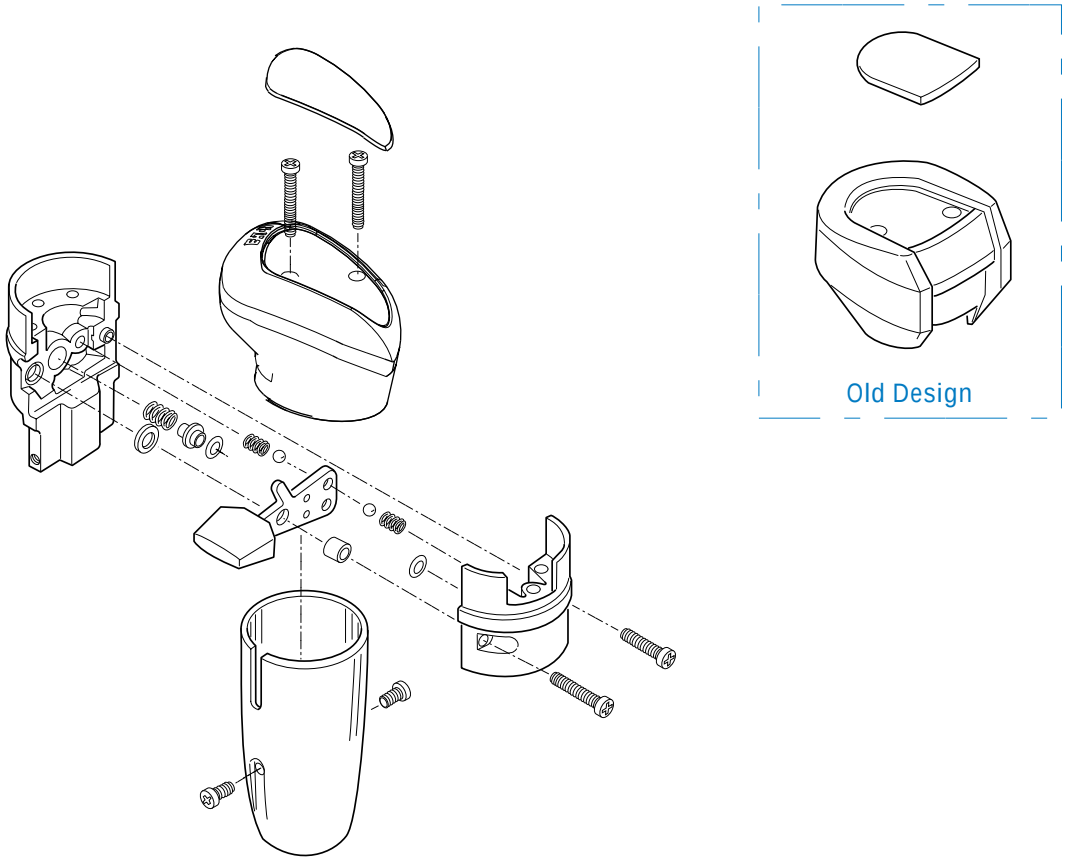

Model Designation	Part Number	Description
7L-8-8L-9-10 Speed	K-1921	Repair Kit Roadranger Valve (A-5010, A-5045, A-5034, A-5035, A-5037, A-5040, A-5043)
13 Speed	K-1826	Repair Kit Roadranger Valve (A-4900, A-5038, A-5041)
7LL-8LL-9MLL-15 Speed	K-1922	Repair Kit Roadranger Valve (A-5015, A-5036, A-5039, A-5042A-5044, A-5046, A-6482)
18 Speed	K-2072	Repair Kit Roadranger Valve (A-5013, A-5429)
RTLO-14610A	K-2347	Repair Kit Roadranger Valve (A-5510)
For Valves Located To Left of Driver		
7L-8-8L-9-10 Speed	K-1921	Repair Kit Roadranger Valve (A-5310)
13 Speed	K-2053	Repair Kit Roadranger Valve (A-5313)
7LL-8LL-15 Speed	K-2055	Repair Kit Roadranger Valve (A-5315)
18 Speed	K-2073	Repair Kit Roadranger Valve (A-5318)

Roadranger Valve Shift Diagram Medallion

For Valves Located to Right of Driver

ROADRANGER VALVE MEDALLIONS

- AVAILABLE IN TWO STYLES
- GENERIC AND WITH SHIFT DIAGRAM

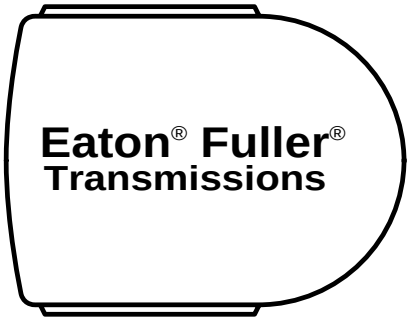

GENERIC
MEDIALLION
20107

ACTUAL SIZE

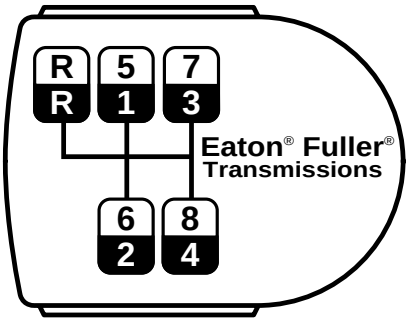

20880
A-5034
A-5010
RT-11608
RT-14608

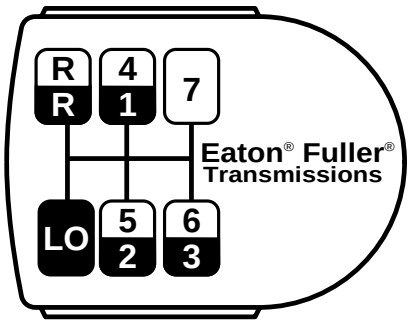

20881
A-5035 A-5036
A-5010 A-5015
RTO-11607L
RTO-11607LL
RTO-11707LL
RTO-11707DLL
RTO-13707DLL
RTO-13707MLL

For Valves Located to Left of Driver

ROADRANGER VALVE MEDALLIONS

- AVAILABLE IN TWO STYLES
- GENERIC AND WITH SHIFT DIAGRAM

GENERIC
MEDALLION
21691

ACTUAL SIZE

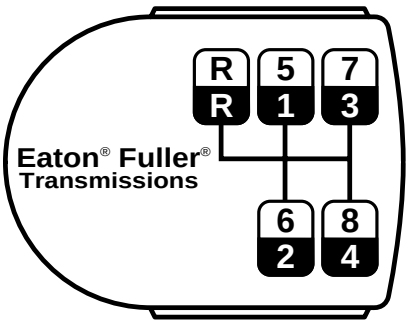

21697
A-5310
RT-11608
RT-14608

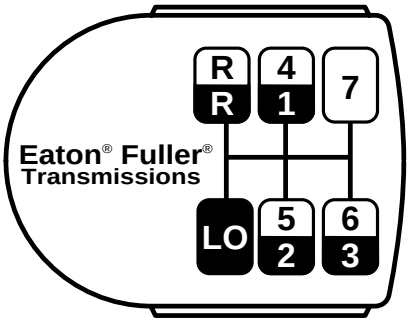

21698
A-5310
A-5315
RTO-11607L
RTO-11607LL
RTO-11707LL

VALVES WITH GENERIC MEDALLION (BLACK)

VALVES WITH SHIFT DIAGRAM MEDALLION (BLUE)

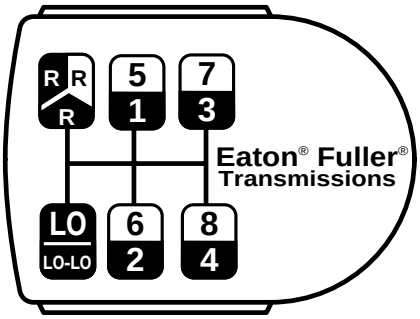

4300367

A-5039
A-5015
RT-7608LL
RTX-11608LL
RTX-11708LL
RTX-14608LL
RTX-14708LL

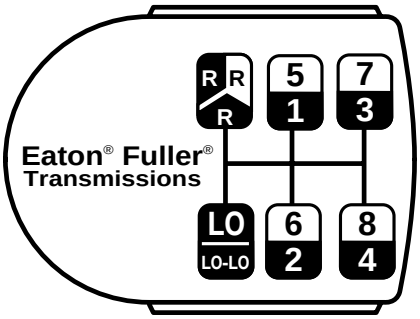

4300369

A-5748
A-5315
RT-7608LL
RTX-11608LL
RTX-11708LL
RTX-14608LL
RTX-14708LL

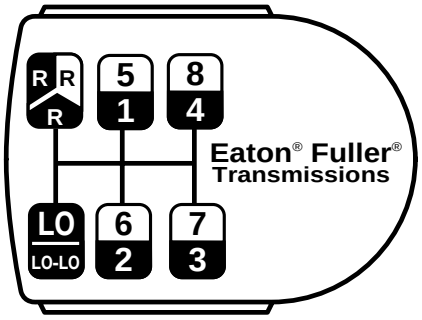

4300368

A-5042
A-5015
RTO-11608LL
RTO-11708LL
RTO-14608LL
RTO-14708LL

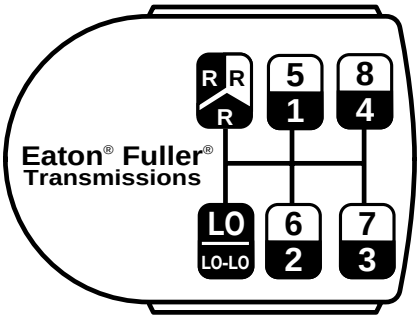

4300370

A-5749
A-5315
RTO-11608LL
RTO-11708LL
RTO-14608LL
RTO-14708LL

VALVES WITH GENERIC MEDALLION (BLACK)

VALVES WITH SHIFT DIAGRAM MEDALLION (BLUE)

Roadranger Valve Shift Diagram Medallion

For Valves Located to Right of Driver

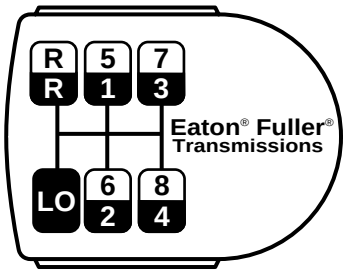

20882

A-5037	A-5038
A-5010	**A-4900**
RT-6609A	RT-11613
RT-8608L	RTO-11613
RT-8609	RTOX-11613
RT-11609A	RTO-11813
RTX-11609A	RT-14613
RTX-11609B	RTO-14613
RT-11709A	RTOX-14613
RT-11709B	RTO-14813
RTX-11709A	RT-15613
RTX-11709B	RTO-15613
RT-12609A	RTO-15813
RTX-12609A	RTLO-14613
RT-12709A	
RT-12709B	
RTX-12709A	
RTX-12709B	
RT-14609A	
RTX-14609A	
RTX-14609B	
RT-14709A	A-5429
RT-14709B	A-5013
RTX-14709A	RTO-15618
RTX-14709B	RTLO-14618
RT-13609A	RTLO-16618
RTX-13609A	
RTX-13609B	
RTX-16709B	
RT-11709H	
RT-12709H	
RT-13709H	
RT-14709H	
RTX-11709H	
RTX-12709H	
RTX-13709H	
RTX-14709H	
RTX-16709H	

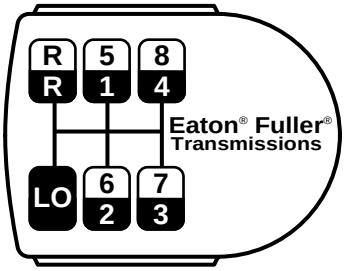

20883

A-5040	A-5041
A-5010	**A-4900**
RTO-11609A	RTOO-11613
RTO-11609B	RTOO-14613
RTO-11709A	
RTO-11709B	
RTO-12609A	
RTO-12609B	
RTO-12709A	
RTO-12709B	
RTO-14609A	
RTO-14609B	
RTO-14709A	
RTO-14709B	

VALVES WITH GENERIC MEDALLION (BLACK)

For Valves Located to Left of Driver

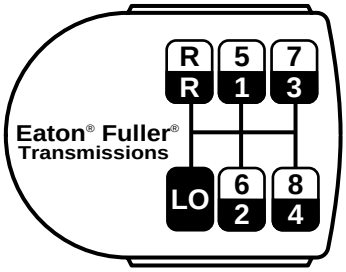

21699

A-5310	**A-5313**
RT-6609A	RT-11613
RT-8608L	RTO-11613
RT-8609	RTOX-11613
RT-11609A	RTO-11813
RTX-11609A	RT-14613
RTX-11609B	RTO-14613
RT-11709A	RTOX-14613
RT-11709B	RTO-14813
RTX-11709A	RT-15613
RTX-11709B	RTO-15613
RT-12609A	RTO-15813
RTX-12609A	RTLO-14613
RT-12709	
RT-12709B	
RTX-12709A	
RTX-12709B	
RT-14609A	
RTX-14609A	
RTX-14609B	
RT-14709A	A-5318
RT-14709B	RTO-15618
RTX-14709A	RTLO-14618
RTX-14709B	RTLO-16618

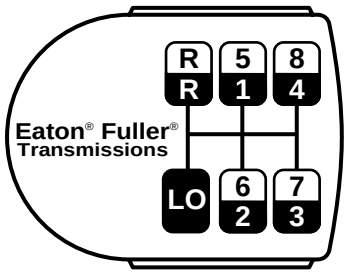

21700

A-5310	**A-5313**
RTO-11609A	RTOO-11613
RTO-11609B	RTOO-14613
RTO-11709A	
RTO-11709B	
RTO-12609A	
RTO-12609B	
RTO-12709A	
RTO-12709B	
RTO-14609A	
RTO-14609B	
RTO-14709A	
RTO-14709B	

VALVES WITH SHIFT DIAGRAM MEDALLION (BLUE)

For Valves Located to Right of Driver

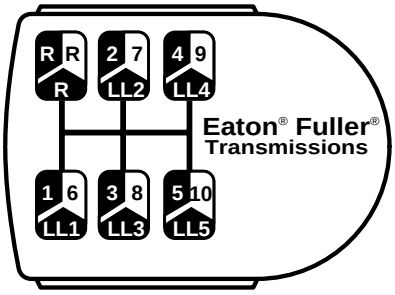

21818

A-5015
RT-6613
A-5284 Dia. Medallion

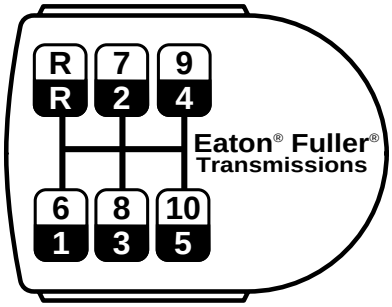

20884

A-5043
A-5010
RT/RTX-11610
RT/RTX-12610
RT/RTX-14610

A-5044
A-5015
RT/RTX-11615
RT/RTX-11715
RT/RTX-14615
RT/RTX-14715
RT/RTX-15615
RT/RTX-15715
A-5043
RT-6610
RT/RTX-11710 B/C
RT/RTX-12710 B/C
RT/RTX-13710 B/C
RT/RTX-14710 B/C
RTX-15710 B/C
RTX-16710 B/C

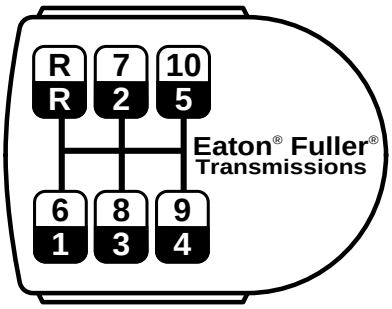

20885

A-5045
A-5010
RTO-6610
RTO-11610
RTO-12610
RTO-14610

A-5046
A-5015
RTO-11615
RTO-11715
RTO-14615
RTO-14715
RTO-15615
RTO-15715

VALVES WITH GENERIC MEDALLION (BLACK)

For Valves Located to Left of Driver

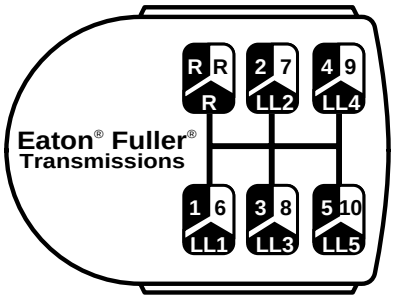

21819

A-5315
RT-6613

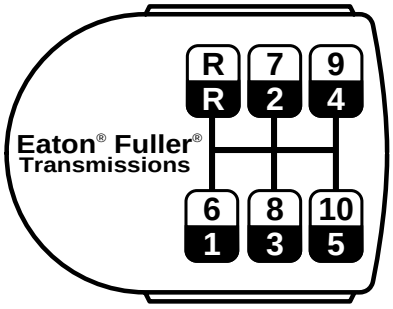

21701

A-5310
RT/RTX-11610
RT/RTX-12610
RT/RTX-14610

A-5315
RT/RTX-11615
RT/RTX-11715
RT/RTX-14615
RT/RTX-14715
RT/RTX-15615
RT/RTX-15715

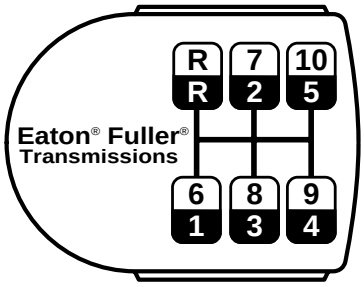

21702

A-5310
RTO-6610
RTO-11610
RTO-12610
RTO-14610

A-5315
RTO-11615
RTO-11715
RTO-14615
RTO-14715
RTO-15615
RTO-15715

VALVES WITH SHIFT DIAGRAM MEDALLION (BLUE)

Roadranger Valve Shift Diagram Medallion

For Valves Located to Right of Driver

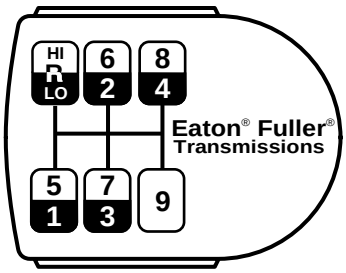

21519

A-5185
A-5010
RTX-11609P/R
RTX-12609P/R
RTX-14609P/R
RTX-13609P/R

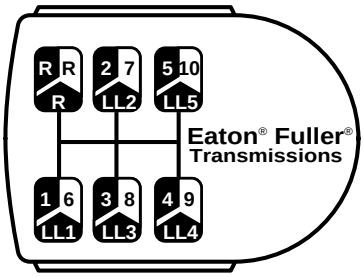

21820

A-5285 Dia. Medallion
A-5015
RTO-6613

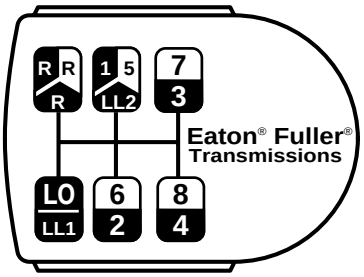

4302762

A-6482
A-5015
RTO-11709MLL
RTO-14709MLL

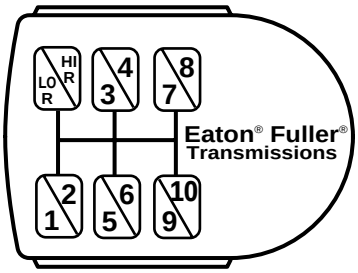

4301681

A-5510
RTLO-11610B
RTLO-12610B
RTLO-13610B
RTLO-14610A/B
RTLO-15610B
RTLO-16610B

VALVES WITH GENERIC MEDALLION (BLACK)

For Valves Located to Left of Driver

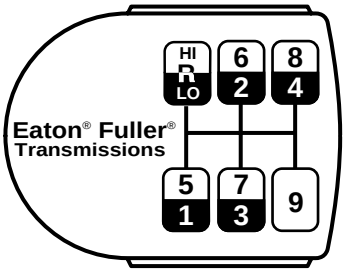

21704

A-5310
RTX-11609P/R
RTX-12609P/R
RTX-14609P/R

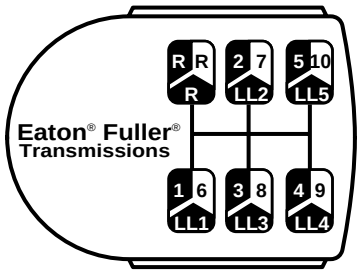

21821

A-5315
RTO-6613

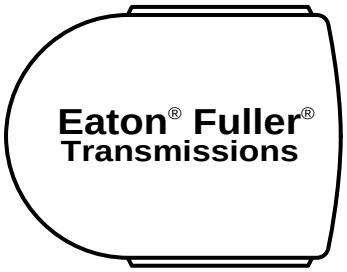

21691

A-5315
RTO-11709MLL
RTO-14709MLL

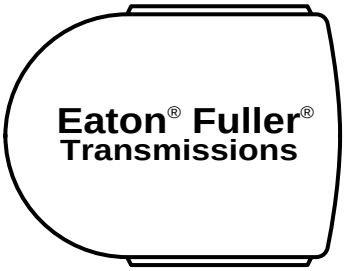

21691

A-6333
RTLO-11610B
RTLO-12610B
RTLO-13610B
RTLO-14610A/B
RTLO-15610B
RTLO-16610B

VALVES WITH SHIFT DIAGRAM MEDALLION (BLUE)