Identification

To identify your clutch housing you need to know the following information.

- is it a number 1 or number 2 housing
- iron or aluminum
- standard housing or nodal mount
- if nodal mount, does it have symmetical or non-symmetrical bolt pattern
- are the upper or lower pedal shaft holes bushed
- can you find the part number stamped in the housing

with the above information the following pages will help you identify what clutch housing you have or want.

Clutch Hsg. Part No.	Order Assy. No.	Description
14788	S-1009	Push/Pull
14789	S-1237	Push/Pull
15016	A-3609	Push/Pull
15016	A-5504 (Spec.)	Push
15135	A-3569	Push
15367	A-3670	Pull
15410	A-3713	Push/Pull
15483	K-1658	Push/Pull
15483	K-1664	Push
15483	K-1665	Pull
15529	A-3711	Push/Pull
15592	A-4048	Push/Pull
15616	A-3723	Push/Pull
16022	S-1182	Push/Pull

Clutch Hsg. Part No.	Order Assy. No.	Description
17126	A-4232	Push
17130	A-4233	Pull
17159	S-1105	Push/Pull
17530	A-4325	Push/Pull
17532	A-4326	Pull
17901	A-4770	Push/Pull
17902	K-1661	Pull
17905	A-4348	Push/Pull
18000	A-4373	Pull
18130	S-1085	Push/Pull
18294	A-4455	Pull
18400	A-4456	Pull
18558	A-4480	Pull
18559	A-4479	Pull
18630	A-4495	Pull
18631	A-4496	Pull
18805	A-4564	Pull
18843	A-4577	Pull
18844	A-4578	Pull
19693	A-4751	Pull
20372	A-4949	Push
20655	A-5004	Push/Pull
20982	A-5067	Push/Pull
21641	A-3700	Pull
21642	A-3722	Pull
21643	A-4342	Pull
23223	A-5531	Push
23393	A-5554	Push/Pull
4300259	A-5728	Pull
4301103	A-5992	Pull
4301204	A-6064	Push/Pull

Clutch Housings — Mid Range

Clutch Hsg. Part No.	Order Assy. No.	Description
20655	A-5004	Push/Pull
20655	A-5314	Pull
21646	A-5205	Push
23722	A-5630	Pull
230546	230545	Push
230549	230548	Push
23726	A-5634	Pull
3316240	3316239	Push
3316242	3316241	Push
23720	A-5628	Pull
23721	A-5629	Pull
23723	A-5631	Pull

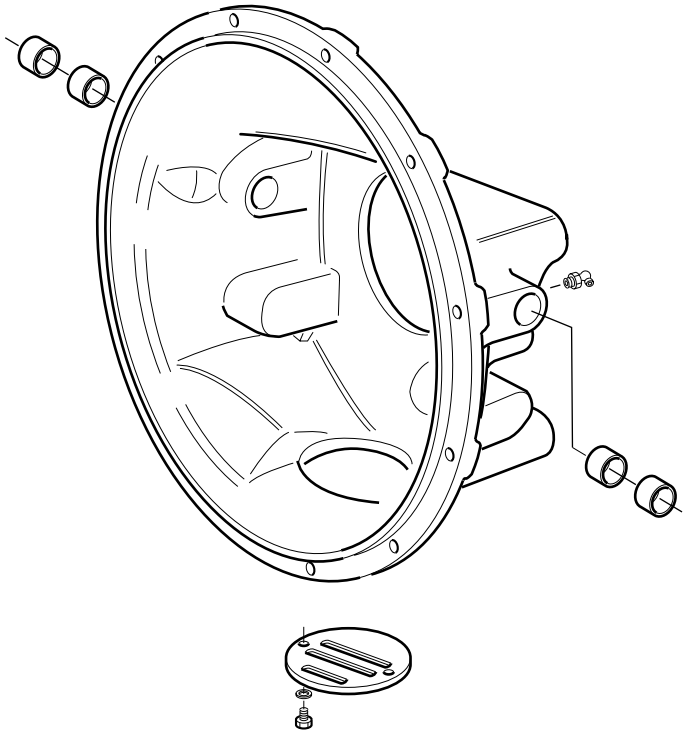

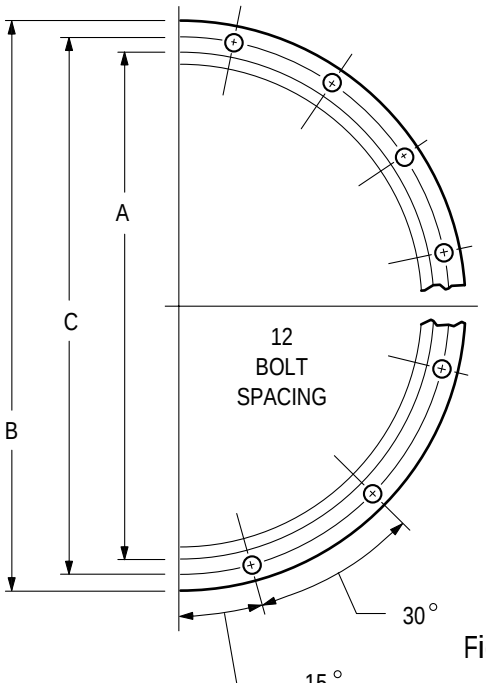

Fig 1

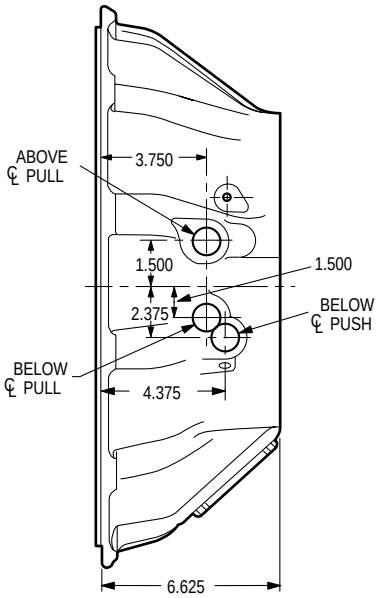

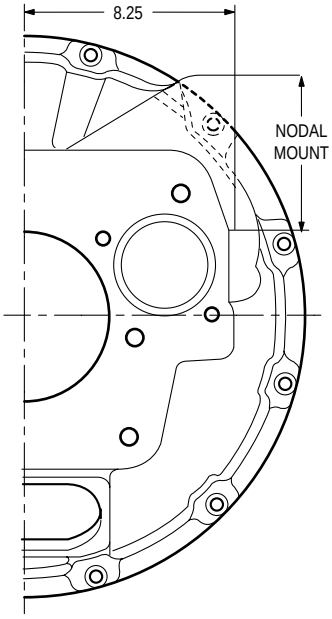

Fig 2

SAE Size No.	A Pilot Diameter	B Outside Diameter	C Bolt Circle	Capscrew Qty	Capscrew Size
1*	20-1/8	21-3/4	20-7/8	12	7/16-14
2*	17-5/8	19-1/4	18-3/8	12	3/8-16

*SAE #1 & SAE #2 denotes clutch housing size. SEE FIG. 1

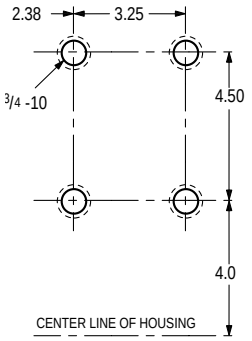

#1 HOUSING ONLY FIG. 3

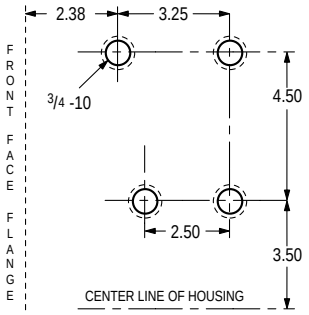

#1 HOUSING ONLY FIG. 4

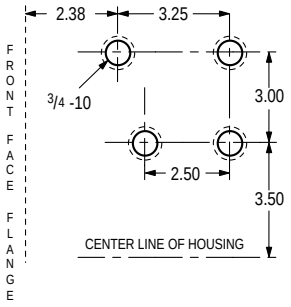

#2 HOUSING ONLY FIG.5

Nodal Mount - Denotes side mounting pads used for support of transmission and engine. SEE FIG. 2.
Symmetrical - Denotes symmetrical bolt mounting pattern of nodal mount. SEE FIG. 3.
Non-symmetrical - Denotes non-symmetrical bolt mounting pattern of nodal mount. SEE FIG. 4 & 5.

Clutch Housing Chart

Model Series	Standard Housing							
	SAE No. 1				SAE No. 2			
	Aluminum		Iron		Aluminum		Iron	
	Type	Part No.	Type	Part No.	Type	Part No.	Type	Part No.
FS-6106					*	A-5004		
					Weight 17 Lbs.			

Model Series	Standard Housing							
	SAE No. 1				SAE No. 2			
900 1157	Aluminum		Iron		Aluminum		Iron	
	Type	Part No.	Type	Part No.	Type	Part No.	Type	Part No.
	*	K-1658	*	S-1009	*	K-1660	*	S-1237
	Weight 23 Lbs.		Weight 76 Lbs.		Weight 21 Lbs.		Weight 68 Lbs.	
	Nodal Mount #1						Nodal Mount #2	
					Non-Symmetrical		Non-Symmetrical	
	Aluminum		Iron		Iron		Iron	
	Type	Part No.	Type	Part No.	Type	Part No.	Type	Part No.
	○	A-4455	≠	A-4325	□	A-4080	○	A-3964
	△	A-4495			△	A-3670	△	A-4750
					≠	A-4049	□	A-3569
					○	A-3996		
	Weight 36 Lbs.		Weight 92 Lbs.		Weight 92 Lbs.		Weight 88 Lbs.	

Symbol Code, Clutch Pedal Shaft Configuration

○ Above Centerline Pull
△ Below Centerline Pull
□ Below Centerline Push
≠ Above and Below Centerline Pull
* Above Centerline Pull and Below Centerline Push
① 8609 Transmission Not Conifgured for Push Type Clutch

Model Series	Standard Housing							
	SAE No. 1				SAE No. 2			
	Aluminum		Iron		Aluminum		Iron	
	Type	Part No.	Type	Part No.	Type	Part No.	Type	Part No.
600			*	S-1085			*	A-3711
			Weight 71 Lbs.				Weight 64 Lbs.	
	Nodal Mount #1						Nodial Mount #2	
	Symmetrical				Non-Symmetrical		Non-Symmetrical	
	Aluminum		Iron		Aluminum		Iron	
	Type	Part No.	Type	Part No.	Type	Part No.	Type	Part No.
			≠	A-5067			*	A-3609
							△	A-4577
	Weight 82 Lbs.							
Model Series	Standard Housing							
	SAE No. 1				SAE No. 2			
6600 and 8609 ①	Aluminum		Iron		Aluminum		Iron	
	Type	Part No.	Type	Part No.	Type	Part No.	Type	Part No.
			○	A-4386				A-3711
			□	A-4385			□	A-3709
				A-4387			○	A-3710
	.		Weight 71 Lbs.				Weight 64 Lbs.	
	Nodal Mount #1						Nodal Mount #2	
	Symmetrical				Non-Symmetrical		Non-Symmetrical	
	Aluminum		Iron		Aluminum		Iron	
	Type	Part No.	Type	Part No.	Type	Part No.	Type	Part No.
			≠	A-5067			○	A-3608
							□	A-3574
								A-3609
							△	A-4577
							Weight 82 Lbs.	

Symbol Code, Clutch Pedal Shaft Configuration

○ Above Centerline Pull

△ Below Centerline Pull

□ Below Centerline Push

≠ Above and Below Centerline Pull

* Above Centerline Pull and Below Centerline Push

① 8600 Transmission Not Configured for Push Type Clutch

Clutch Housing Chart

Model Series	Standard Housing							
	SAE No. 1				SAE No. 2			
8607A-B	Aluminum ①		Iron		Aluminum ①		Iron	
8608L	Type	Part No.	Type	Part No.	Type	Part No.	Type	Part No.
1110	○	A-4342	○	A-3700	○	A-4344	○	A-3722
11500	□	A-4769	□	A-3674	□	A-4771	□	A-3721
11600		A-4770		A-3713		A-4772		A-3723
11700	Weight 23 Lbs.		Weight 76 Lbs.		Weight 21 Lbs.		Weight 68 Lbs.	
11800	Nodal Mount #1						Nodal Mount #2	
12500	Symmetrical				Non-Symmetrical		Non-Symmetrical	
12600	Aluminum		Iron		Iron		Iron	
12700	Type	Part No.	Type	Part No.	Type	Part No.	Type	Part No.
14600	○	A-4456	△	A-4916	□	A-4373	○	A-4233
14700	△	A-4550	≠	A-4348	△	A-3950	△	A-4751
14800					≠	A-4051	□	A-4232
15600	Weight 36 Lbs.		Weight 92 Lbs.		Weight 92 Lbs.		Weight 88 Lbs.	
15700								
15800								

Symbol Code, Clutch Pedal Shaft Configuration

○ Above Centerline Pull

△ Below Centerline Pull

□ Below Centerline Push

≠ Above and Below Centerline Pull

* Above Centerline Pull and Below Centerline Push

① 8600 Transmission Not Configured for Push Type Clutch

FIG. 1

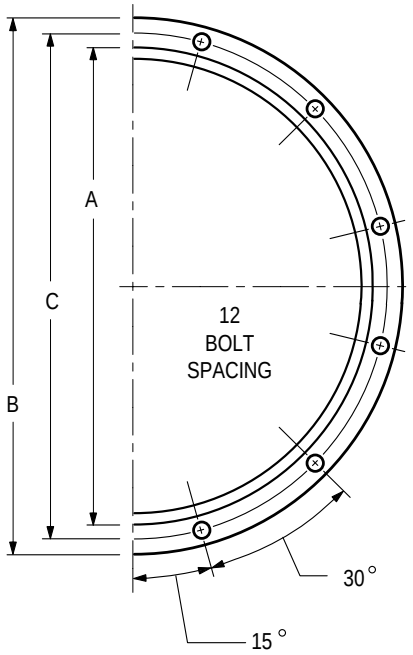

FIG. 2

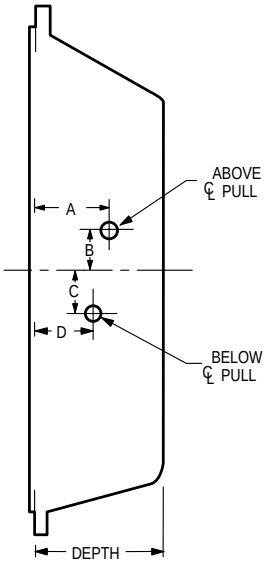

SAE Size No.	A Pilot Diameter	B Outside Diameter	C Bolt Circle	Capscrew Qty	Capscrew Size
1*	20-1/8	21-3/4	20-7/8	12	7/16-14
2*	17-5/8	19-1/4	18-3/8	12	3/8-16

*SAE #1 & SAE #2 denotes clutch housing size. SEE FIG. 1

UPPER NODAL MOUNT

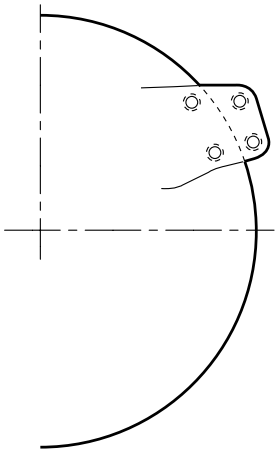

LOWER NODAL MOUNT

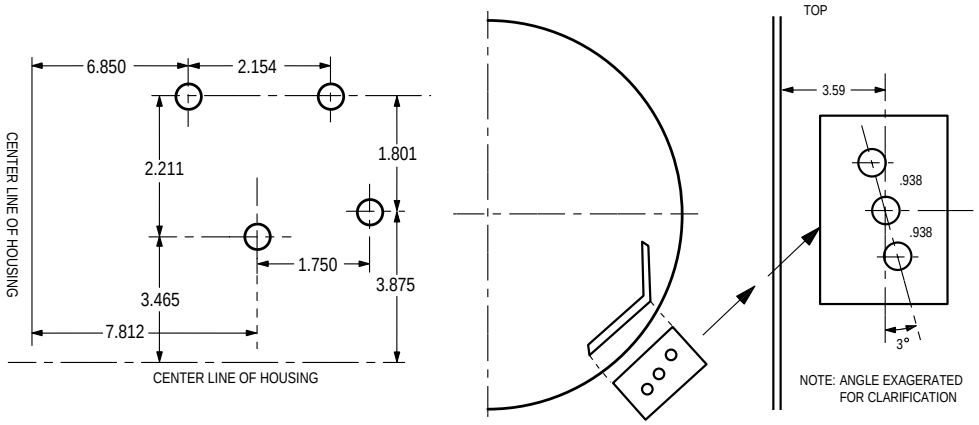

Nodal Mount - Denotes mounting pads used for support of transmission and engine.

Clutch Housing Chart

FS-5106 - FS-6105

Assembly	Housing	SAE No.	Depth	D/G Cover Pilot Dia.	Pedal Shaft Type	Push or Pull	Material
230548	230549	2	6 1/2	7.22	B	Push	Iron
A-5628	23720	2	6	6.25	D	Push	Iron
A-5631	23723	2	4 3/4	7.25	A	Pull	Iron
A-5634	23726	2	6 5/8	6.25	A	Pull	Alum.
A-5205	21646	2	6 5/8	6.25	E	Push	Alum.
—	3316241	2	4 3/4	7.25	Fork	Push	Alum.

Note: Assemblies listed are complete with Bushings and Grease Fittings.

	Dimensions for Mounting Pedal Shaft See Figure 2				
	Above Pull		Below Push		
Clutch Housing	A	B	C	D	Nodal Mount
230548	–	–	2.500	3.590	Lower
A-5628	–	–	2.500	3.625	Upper
A-5631	3.750	1.500	–	–	–
A-5634	3.750	1.500	–	–	–
A-5205	–	–	3.000	2.563	–