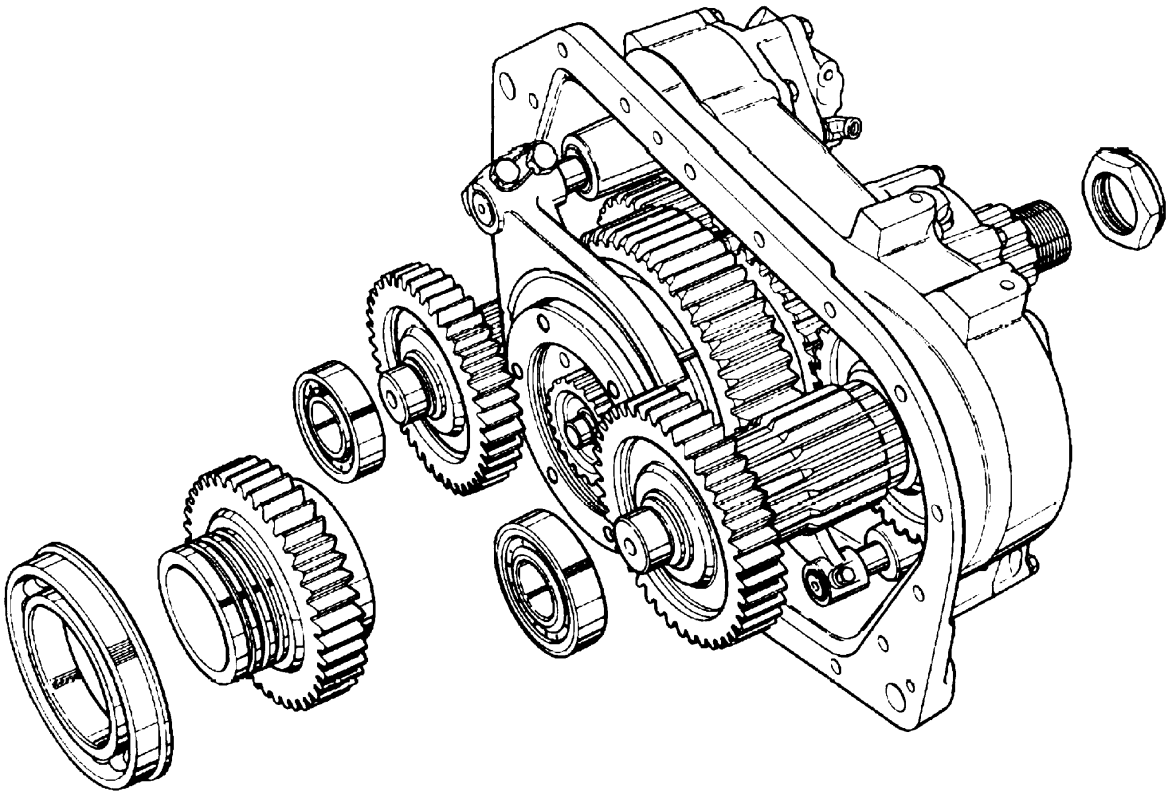

Combine Fuller Transmission New Generation technology with your present transmission for a new dimension of quiet, efficient performance.

Now, you can upgrade and improve the performance of your Old Generation Transmission without paying the high cost of downtime or rebuilding. Simply replace the old auxiliary section with a new auxiliary section assembly, with quiet, cost-efficient New Generation Transmission technology.

A cost-effective way to upgrade your transmission

Auxiliary Range Section Assemblies

8 Speeds	Part Number
RT-9508 Series	S-1459
RTO-1157DL	S-1466
RTO-11607L	S-1395
RT-11608 Series	S-1386
RT-14608 Series	S-1391

9 Speeds	Part Number
RT-6609 Series	S-1456
RT-8608L Series	S-1386
RT-8609 Series	S-1456
RT/RTO-9509A	S-1460
RTO-9509B	S-1461
RTO-1157DLL	S-1467
RT-11509 Series	S-1464
RTO-11607LL	S-1396
RTO-11707LL Series	S-1554
RT/RTO-11609A	S-1385
RT/RTO-11609B, P, R	S-1386
RT/RTO-11709A	S-1741
RT/RTO-11709B	S-1742
RT-11709H	S-1743
RTO-11709H	S-1744
RT/RTO-12509 Series	S-1468
RT/RTO-12609A	S-1401
RTX-12609B, P, R	S-2104
RT/RTO-12709A	S-1775
RTO-12709B	S-1776
RT-12709H	S-1777
RTO-12709H	S-1778
RT/RTX-13609A	S-2099
RTX-13609B, P, R	S-1944
RTO-13707MLL	S-2214
RT-13709H	S-1896

9 Speeds Continued	Part Number
RTX-13709H	S-1897
RT/RTO-14609A	S-1390
RTO-14609B	S-1391
RT/RTO-14709A	S-1766
RTO-14709B	S-1767
RT-14709H	S-1768
RTX-14709H	S-1769
RTX-16709	S-1901

10 Speeds	Part Number
RT/RTO-910 Series	S-1458
RTO-958LL Series	S-1463
RT/RTO-1110 Series	S-1465
RTO-11608LL Series	S-1397
RTO-11708LL Series	S-1555
RT/RTO-11610 Series	S-1398
RTLO-11610B Series	S-2133
RT/RTX-11710B	S-1929
RT/RTX-11710C	S-1935
RTO-1258LL Series	S-1470
RT/RTO-12510 Series	S-1469
RT/RTO-12610 Series	S-1402
RTLO-12610B Series	S-2135
RT/RTX-12710B	S-1937
RT/RTX-12710C	S-1939
RTLO-13610B Series	S-2139
RT/RTX-13710B	S-1931
RT/RTX-13710C	S-1933
RTO-14608LL Series	S-1400
RTO-14708LL Series	S-1557
RT/RTO-14610 Series	S-1395
RTLO-14610A	S-1790
RTLO-14610B	S-2112
RT/RTX-14710B	S-1818
RT/RTX-14710C	S-1941

10 Speeds Continued	Part Number
RTLO-15610B	S-2144
RTLO-16610B	S-2146
RTX-16710B	S-2045
RTX-16710C	S-2047

11 Speeds	Part Number
RTO-11709MLL	S-2218
RTO-14709MLL	S-2216

13 Speeds	Part Number
RT-9513	S-1450
RTO-9513	S-1451
RTOO-9513	S-1473
RT-11613	S-1387
RTO-11613	S-1388
RTO-11613 with Tapered Bearings	S-2361
RTOO-11613	S-1389
RT-12513	S-1452
RTO-12513	S-1453
RTLO-12713A	S-2168
RT-14613	S-1392
RT-14613 with Tapered Bearings	S-1962
RTO-14613	S-1393
RTO-14613 with Tapered Bearings	S-1960
RTO-14813	S-2023
RTO-14813 with Tapered Bearings	S-2025
RTOO-14613	S-1394
RTOO-14813 with Tapered Bearings	S-2007
RTLO-14613B	S-1948
RTLO-14713A	S-2170
RT-15613	S-1454
RTO-15613	S-1455
RTO-15613 with Tapered Bearings	S-2262
RTLO-16713A	S-2172

15 Speeds	Part Number
RT/RTO-915 Series	S-1462
RT/RTO-11615 Series	S-1399
RT/RTO-11715 Series	S-1556
RT/RTO-12515 Series	S-1472
RT/RTO-14615 Series	S-1396
RT/RTO-14715 Series	S-1554
RT/RTO-15615 Series	S-1471
RT/RTO-15715 Series	S-1554

18 Speeds	Part Number
RT/RTO-15618 Series	S-1562
RTLO-14618A	S-1892
RTLO-14718B	S-2176
RTLO-16618A	S-1893
RTLO-16718B	S-2174
RTLO-18718B	S-2267

Automated Models

9 Speeds	Part Number
RT/RTO-9109A-AT, RT-11109A-ATR	S-2187
RTO-9109B-AT, RTO-11109B-ATR	S-2189
RT/RTO-11109A-AT/ATS	S-2181
RT/RTO-11109B-AT/ATS	S-2183
RTO-11109B-ATE	S-2185
RT/RTO-12109A-AT	S-2191
RTO-12109B-AT	S-2193
RTO-13109B-AT	S-2197
RTO-13109, 14109A-ATE	S-2199
RTO-13109, 14109B-ATE	S-2195
RT/RTO-14109A-AT/ATS	S-2201
RTO-14109B-AT/ATS	S-2203
RTO-16109A-ATE	S-2339
RTO-16109B-ATE	S-2341
RTO-16109A-AT	S-2343
RTO-16109B-AT	S-2345

Automated Models Continued

10 Speeds	Part Number
RTAO-11710B-AC	S-2222
RTAO-11710C-AC	S-2224
RTAO-12710B-AC	S-2226
RTAO-12710C-AC	S-2228
RTAO-13710B-AC	S-2230
RTAO-13710C-AC	S-2232
RTAO-14710B-AS	S-2234
RTAO-14710B-AC	S-2234
RTAO-14710C-AS	S-2236
RTAO-14710C-AC	S-2236
RTAO-15710B/16710B-AC	S-2238
RTAO-15710C/16710C-AC	S-2240

18 Speeds	Part Number
RTLO-9118A/11118A-MT	S-2277