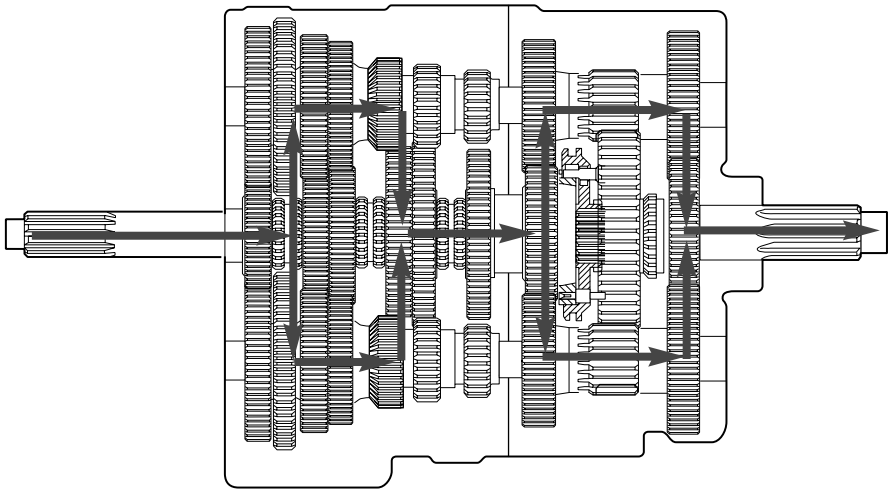

Splitter Blockout

The splitter section may be blocked out for nine speed operation. Refer to service bulletin #95 for instructions.

Splitter (9513-12513)

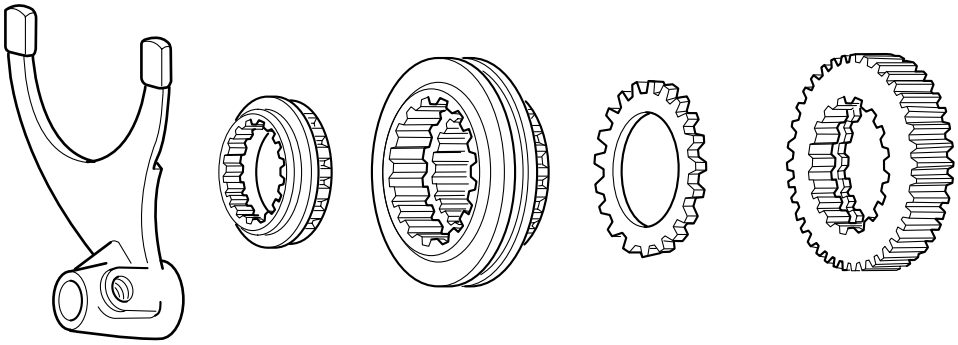

Splitter (11613-14613-15613)

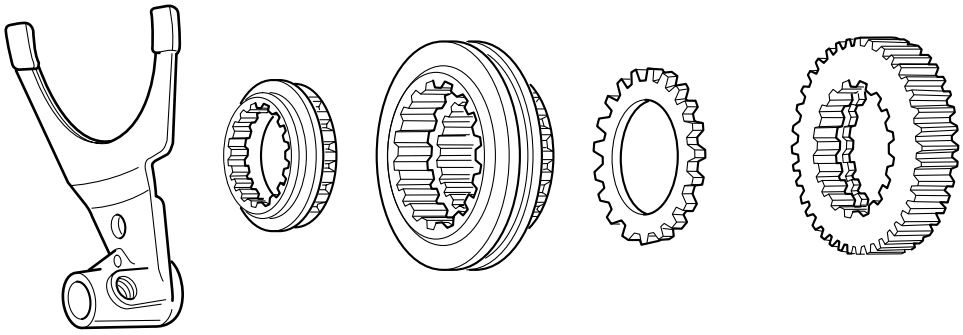

Model Series Application	Part Number
RTO/RTOO-9513	K-2027
RT-9513	K-2026
RTO-12513	K-2025
RT-12513	K-2024

Model Series Application	Part Number
RT-11613	K-1959
RTO/RTOO-11613, 11813	K-1960
RT-14613, 15613	K-1961
RTO/RTOO-14613, 14813	K-1962
RTO-15613, 15813	K-1962

Splitter Parts Combinations

MODELS	Gears					Couplers								Yokes	
		RTO/ RTOO	RT	RT	RTO/ RTOO	9513	RT/RTO 12513	RTO 9513	RTO 12513	RT 9513	RT 12513	9513	11600 12600 14600 15600		
CLUTCHES	16309 Repl. by 16593 S	16593 S	16869 S	17909 H	18994 H	15418 Repl. by 18192 S	15938 S	17911 H	17914 H	18192 S	18193 S	19129 EH	19131 EH	17059	19128
9513 15503 (Repl. by K-1461)	X	X	X			X				X				X	
12513 15959	X	X	X				X				X			X	
9513 16258	X	X	X			X				X				X	
RT9313 17908				X	X	X				X				X	
RTO-RTOO 9513 17910	X	X	X					X						X	
12513 17912				X	X		X				X			X	
12513 17913	X	X	X						X					X	
9513 18995				X	X			X						X	
12513 18996				X	X				X					X	
11600, 12600, 14600 15600, 19132 N				X	X								X		X
9513 19784 N				X	X							X			X

N=New generation update
S=Straight cuts clutching teeth

EH=External clutching teeth, new generation
H=Helix cut clutching teeth

Helix Clutching Teeth

M/S OD/4th Update

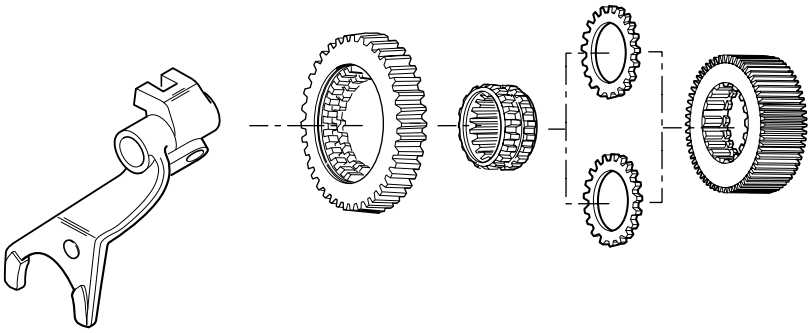

Model Application	Part Number
RT-610, 613	K-1670
RTO-610, 613	K-1671

M/S OD/4th Update

RT-6610, 6613	K-2018
RTO-6610, 6613	K-2019
RT-8609 (Drive Set)	K-2065