Rear Bearing Covers — Mid Range

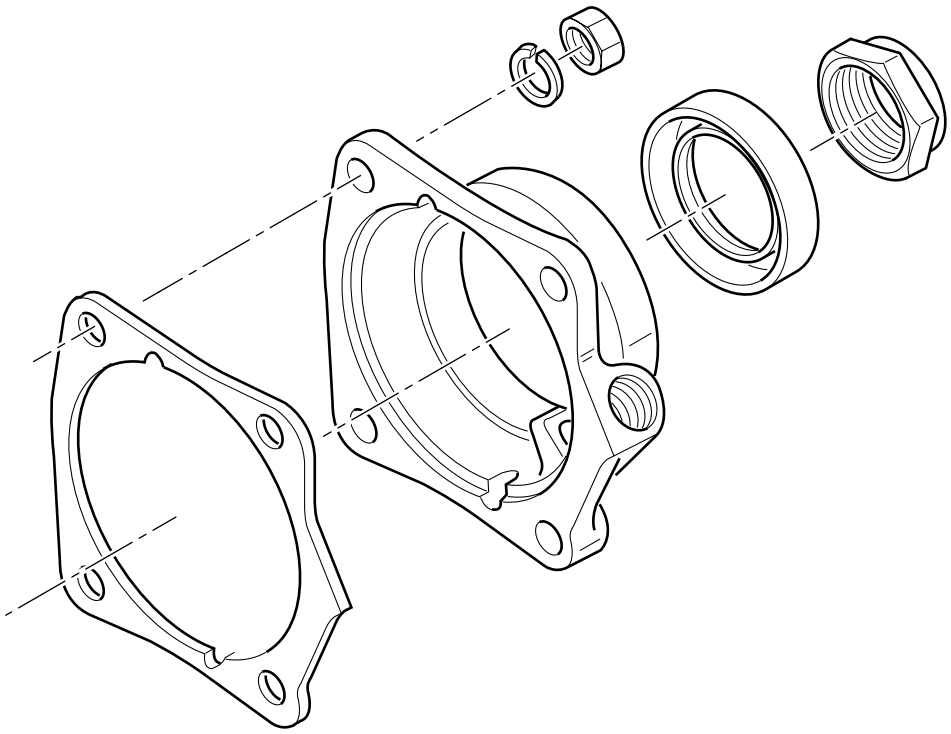

Model Series	Part Number	Service Brg. Cover No.	Speedo Type	Speedo Position	Brake	Output Shaft Dia.
FS-4005/4205	4300846	4300846	MECH.-L.H.	9:00		1.75
	4300849	4300849	MECH.-L.H.	9:00	9X3	1.75
	4300877	4300877	MECH.-L.H.	9:00	9X3	1.75
	4300970	4300970	MECH.-L.H.	9:00	9X3	1.75
	4300972	4300972	MECH.-L.H.	9:00		1.75
	4301053	4301053	MECH.-L.H.	9:00	9X3	1.75
	4301985	4301985	MAG.	8:30	12X4	1.75
	4302614	K-7038	MAG.	12:30		1.75
	4302615	K-7039	MAG.	8:30	9X3	1.75
	4302037	S-7030	MAG.	12:30		1.75
	4302039	S-7031	MAG.	8:30	9X3	1.75

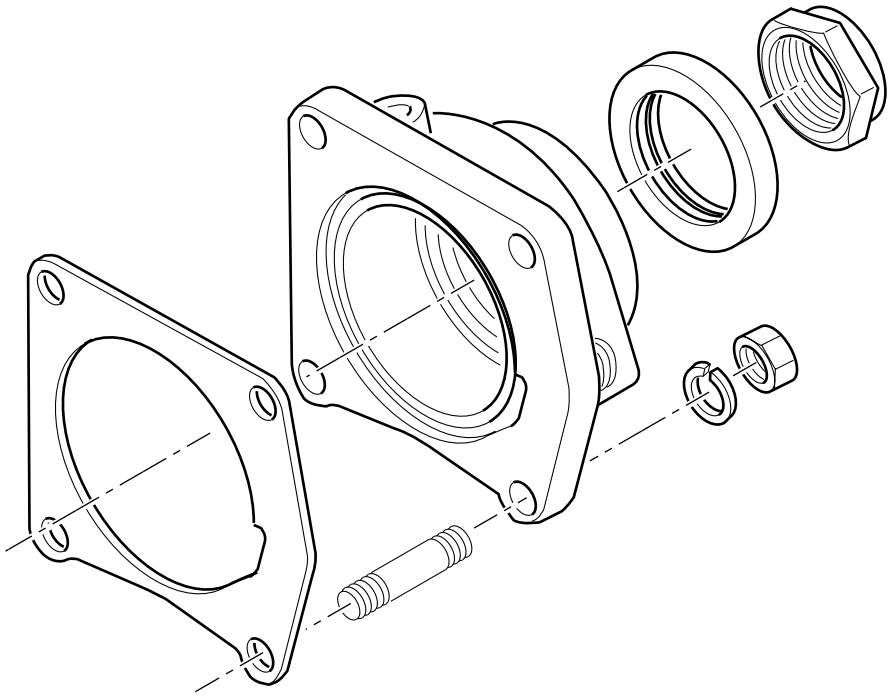

Model Series	Part Number	Service Brg. Cover No.	Speedo Type	Speedo Position	Output Brake	Shaft Dia.
FS-5005/5205	23706	23706	MECH.-L.H.	9:00		1.96
	23709	23709	MECH.-L.H.	9:00	10X2.5	1.96
	235636	235636	MECH.-R.H.	12:00		1.75/1.96
	240972	240972	MECH.-L.H.	9:00	12X4	1.96
	240973	240973	MECH.-L.H.	9:00		1.96
	241705	241705	MECH.-L.H.	9:00		1.96
	3316426	3316426	MECH.-L.H.	9:00		1.96
	4302616	K-7040	MAG.	8:30	12X4	1.96
	4302617	K-7041	MAG.	8:30	12X3	1.96
	4302618	K-7042	MAG.	8:30		1.96
	4301986	S-7032	MAG.	8:30		1.96
	4302023	S-7033	MAG.	8:30	12X3	1.96
	4302000	S-7034	MAG.	12:30	12X4	1.96

Rear Bearing Covers — Mid Range

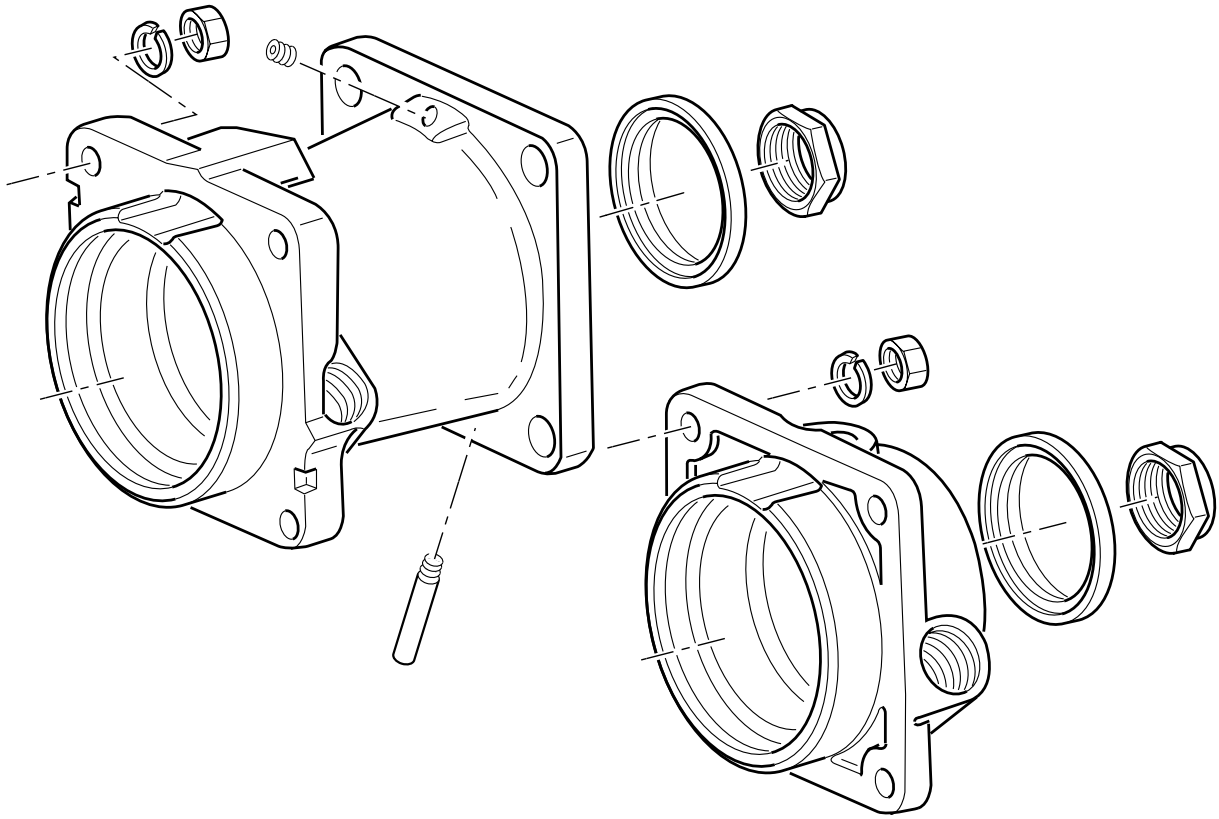

Model Series	Number	Part Cover No.	Service Brg. Type	Speedo Position	Speedo Brake	Output Shaft Dia.
FS-6005/6105/6205/6305						
5106/6206/5306/6306	21901	21901	MECH-L.H.	9:00	12X4	1.95
	21947	21947	MECH-L.H.	9:00	12X3	1.95
	22022	22022	MECH-L.H.	9:00		1.95
	23713	23713	MECH-L.H.	9:00	10X2.5	1.95
	3316278	3316278	MECH-L.H.	9:00		1.95
	4300526	4300526	MECH-L.H.	9:00	10X2.5	2.3
	4301987	S-7035	MAG.	8:30	12X4	1.95
	4302005	S-7036	MAG.	8:30	12X3	1.95
	4302029	S-7037	MAG.	12:30		1.95
	4302100	S-7038	MAG.	12:30		1.95
	4302619	K-7043	MAG.	8:30	12X4	1.95
	4302620	K-7044	MAG.	8:30	12X3	1.95
	4302621	K-7045	MAG.	12:30		1.95

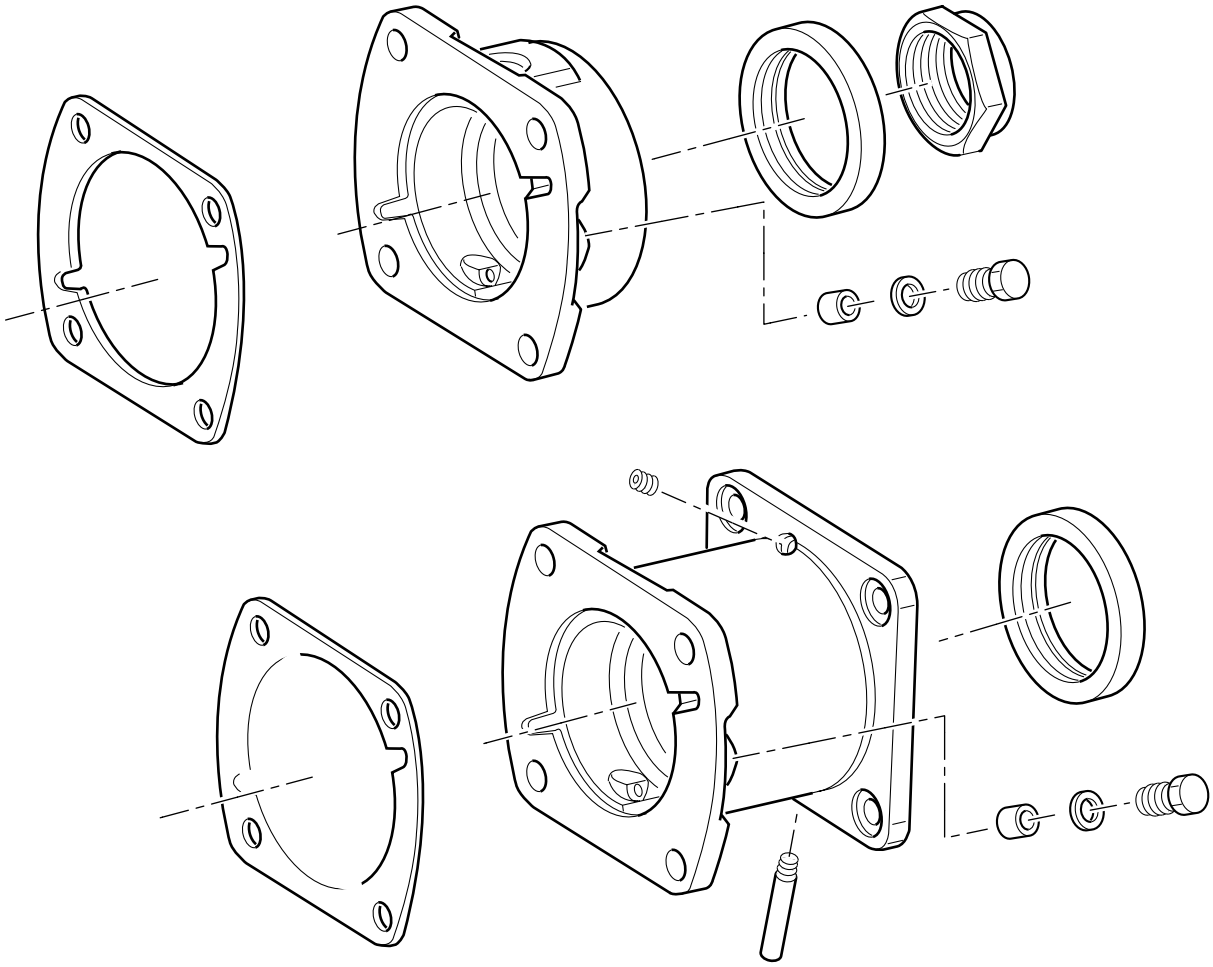

FS-6106

Part Number	Service Brg. Cover No.	Speedometer Type	Speedometer Location	Brake
20653	K-1964	Mechanical	9:00	—
20970	K-2797	Magnetic	12:00	—
20977	K-1966	Mechanical	9:00	12x4
22117	S-1619	Mechanical	9:00	12x3
22118	S-1620	Magnetic	8:30	12x3
23249	A-5565	Magnetic	9:00	12x4

Rear Bearing Covers — Mid Range

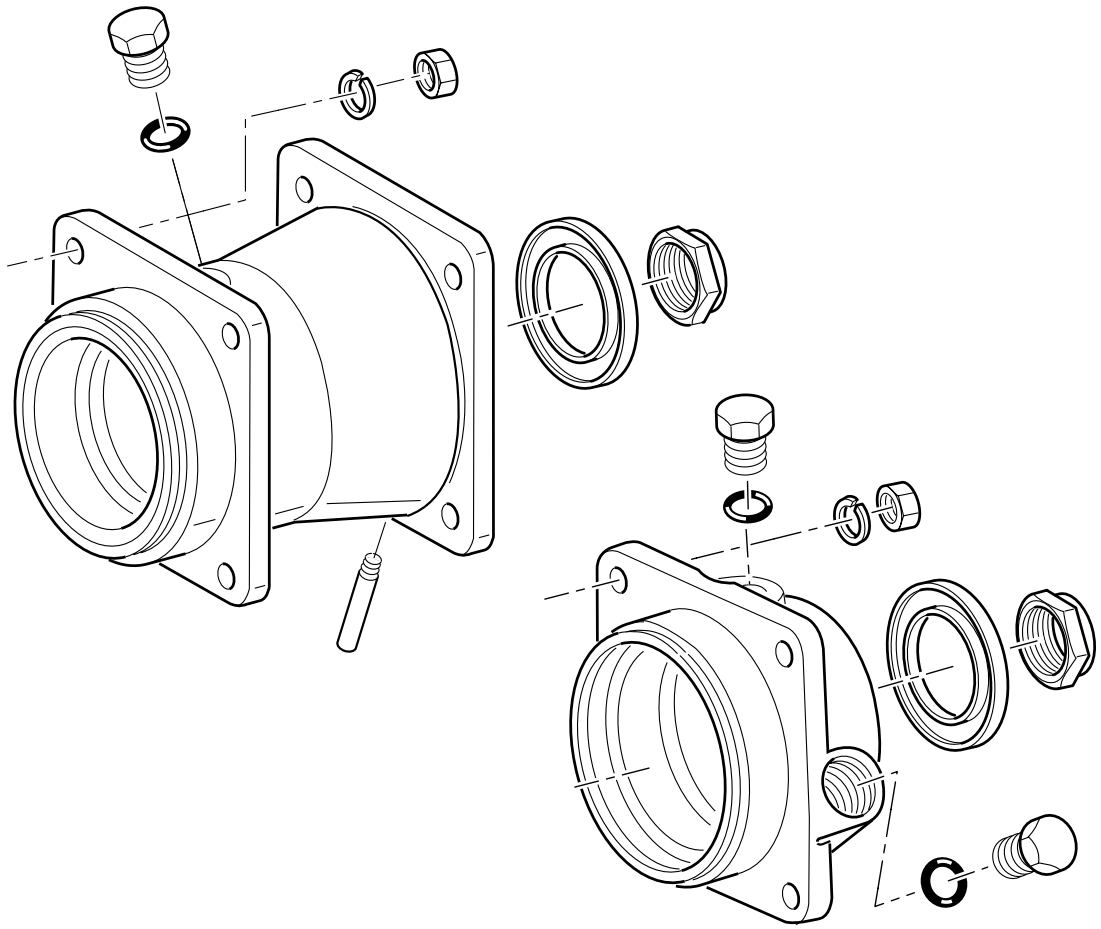

Model Series	Part Number	Service Brg. Cover No.	Speedo Type	Speedo Position	Brake	Output Shaft Dia.
FS-7206	22325	S-7039	MAG/MECH	12:30/9:00		1.95
	23336	S-7042	MAG	12:30	12x3	1.95
	4300784	S-7040	MAG	12:30		1.95
	4302014	S-7039	MAG/MECH	12:30/9:00		1.95
	4302022	S-7042	MAG	12:30	12x3	1.95
	4302035	S-7040	MAG	12:30		1.95
	4302347	S-7041	MAG	12:30		1.95
	4302622	K-7046	MAG	12:30		1.95
	4302623	K-7047	MAG	12:30	12x3	1.95

Model Series	Part Number	Service Brg. Cover No.	Speedo Type	Speedo Position	Brake	Output Shaft Dia.
FS-8206	4300098	4300098	MECH.-L.H.	9:00	12x3	2.3
	4302019	S-7043	MAG-MECH	12:30/9:00		2.3
	4302352	S-7044	MAG	12:30		2.3
	4302624	K-7048	MAG	12:30		2.3

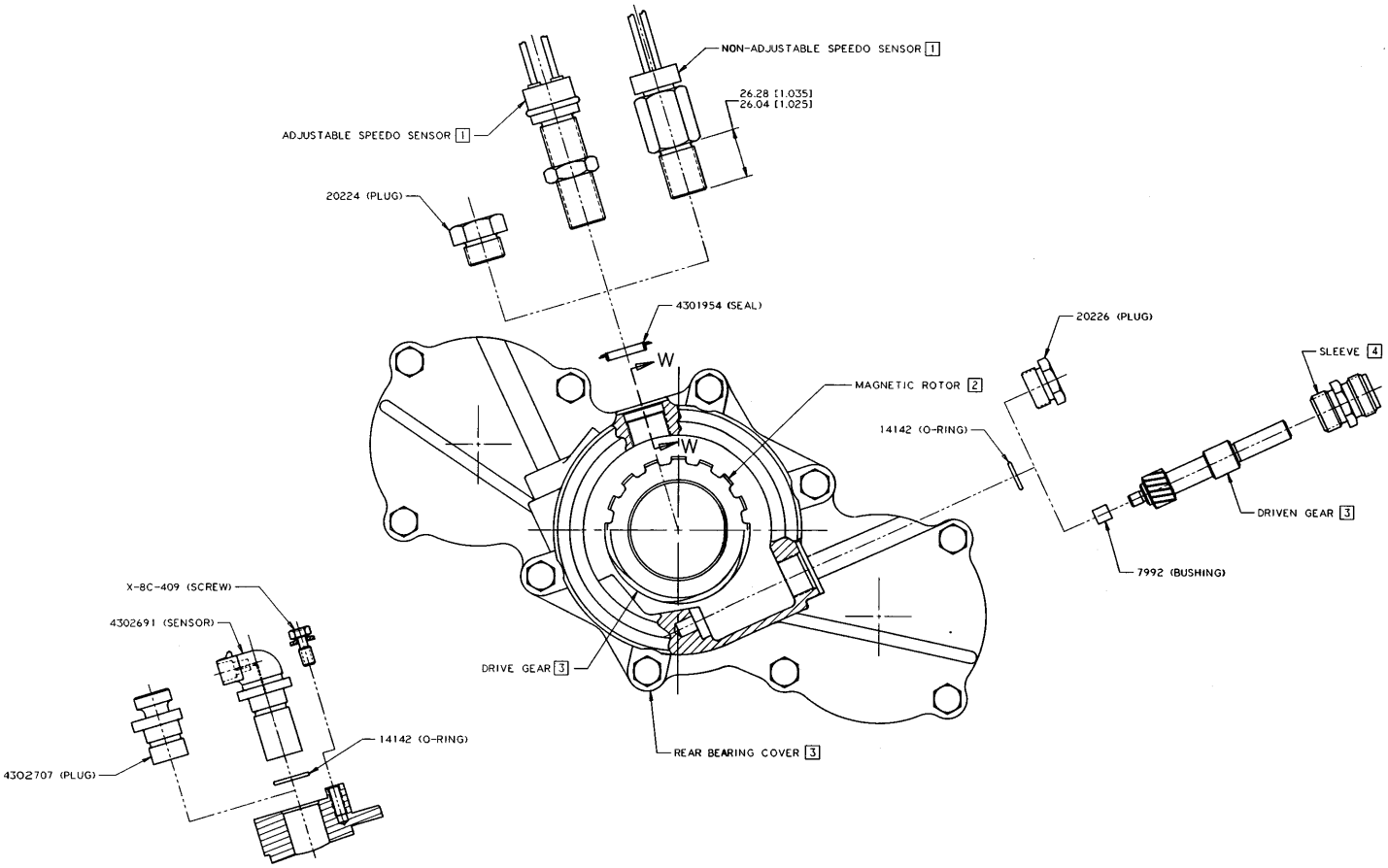

Note for magnetic sensor application consult O.E.M. or Speedo Manufacturer

Rear Bearing Cover Clock Position

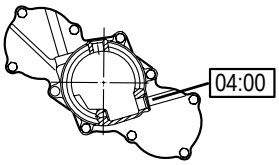

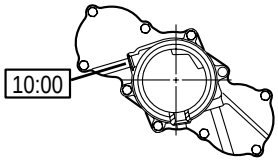

20633
(1) Mechanical Right Side

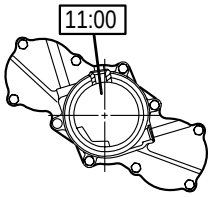

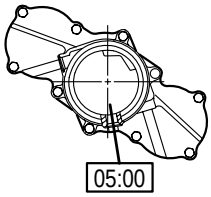

4302628
(1) Magnetic

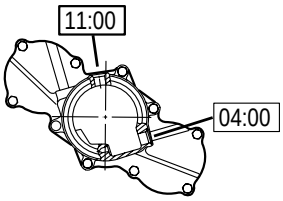

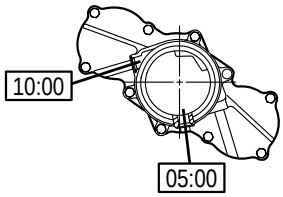

4302003
21762
(1) Mechanical
(1) Magnetic

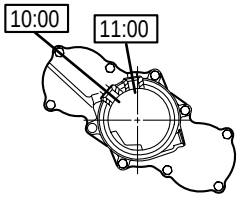

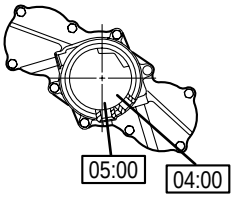

4301998
21527
(1) Magnetic

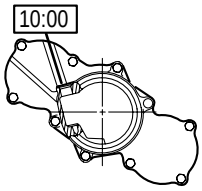

20810
(1) Mechanical Left Side

This cover-20810-may be rotated if cover has cast notches on both sides.

NOTE: This cover uses left hand speedometer gears.

Model Series	Speedo Location	Production Threaded Sensor Brg. Cover	Service Threaded Sensor Brg. Cover	Production Push In Sensor Brg. Cover	Service Push In Sensor Brg. Cover
RT-6609 RT-6610 RT-8609	(1) Mechanical Left Side	20810	K-1937		
	(1) Mechanical Right Side	20633	S-2148		
	(1) Mechanical Right Side (1) Magnetic	4302003 21762	S-2148		
	(2) Magnetic	4301998 21527	S-2148	4302627	S-2373
	(1) Magnetic			4302628	S-2373

Rear Bearing Cover Clock Position

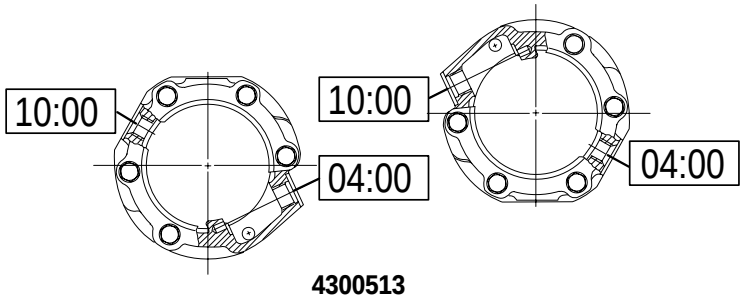

4300513
21639
(1) Magnetic (1) Mechanical

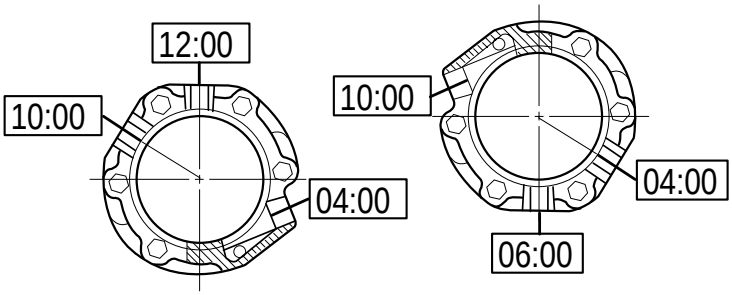

4302033
4302001
21640
(2) Magnetic (1) Mechanical

All Covers May Also Be Installed 180° From Position Shown

Model Series	Speedo Type and Location	Production Threaded Sensor Brg. Cover	Service Threaded Sensor Brg. Cover	Production Push In Sensor Brg. Cover	Service Push In Sensor Brg. Cover
T-905 T-11605	(1) Magnetic 60° from top and (1) Mechanical Standard	21639 4300513	 S-2155		
	(2) Magnetic Top of cover and 60° from Top (1) Mechanical Standard	4302001 4302033 21640	S-2155		

Rear Bearing Cover Clock Position

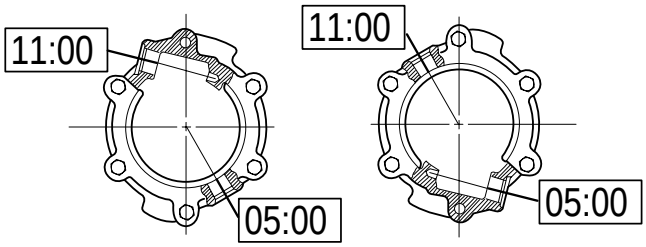

T8607
(1) Magnetic (1) Mechanical

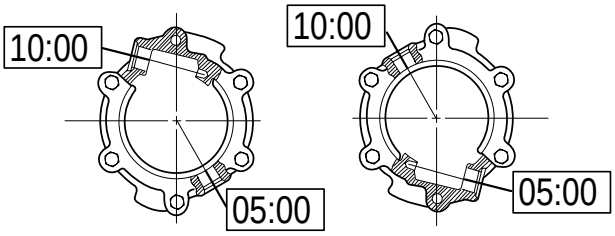

T11607-T14607
(1) Magnetic (1) Mechanical

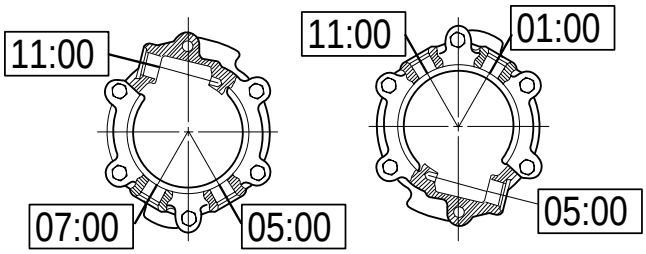

T11607-T14607
(2) Magnetic (1) Mechanical

Model Series	Speedo Type and Location	Production Threaded Sensor Brg. Cover	Service Threaded Sensor Brg. Cover	Production Push In Sensor Brg. Cover	Service Push In Sensor Brg. Cover
T-8607	(1) Magnetic 60° from top (1) Mechanical	22049 4302011 20986	S-2147		
	(1) Magnetic 60° from top			4302570	S-2359
T-11607 T-14607	(1) Magnetic (1) Mechanical	22742 4302018 20816	S-2142		
	(2) Magnetic			4302586	S-2358
	(2) Magnetic (1) Mechanical	22050 21678 4302012	S-2142		
	(1) Magnetic			4302587	S-2358

88

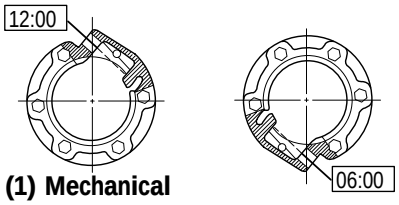

(1) Mechanical

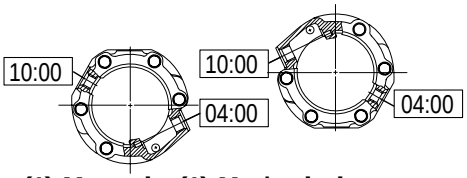

(1) Magnetic (1) Mechanical

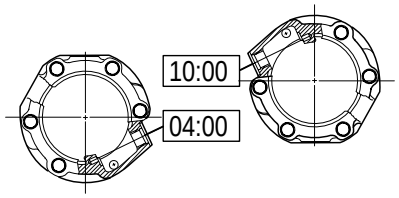

(1) Mechanical

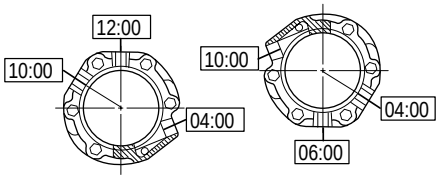

(2) Magnetic (1) Mechanical

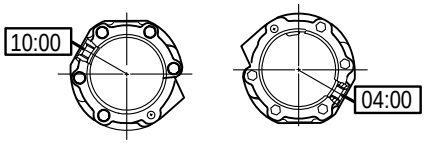

(1) Magnetic

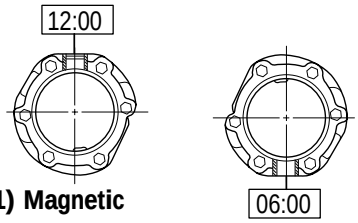

(1) Magnetic

Model Series	Speedo Type and Location	Production Threaded Sensor Brg. Cover	Service Threaded Sensor Brg. Cover	Production Push In Sensor Brg. Cover	Service Push In Sensor Brg. Cover
RT-6613 RT-7608LL RT-8608L RT-11608 RTO-11608LL RTO-11708LL RT-11609 RT-12609 RT-13609 RT-11610 RT-12610 RT-11613 RT-11813 RT-11615 RT-11715 RTLO-11610 RTLO-12610 RTLO-13610	(1) Magnetic Top of Cover	4302004 21950 21062	S-2136	4302565	S-2351
	(2) Magentic Top and 60°	4300001 4302030	S-2136	4302566	S-2351
	(1) Mechanical Top 45°	22042 20812	S-2136		
	(1) Mechanical Standard	22038 20205	S-2136		
	(1) Magnetic 60° from top	22039 20206	S-2136	4302567	S-2351
	(1) Magnetic 60° from top (1) Mechanical Standard	4302006 20207 22040	S-2136		
	(2) Magnetic Top of Cover and 60° from top (1) Mechanical Standard	4302007 20208 22041	S-2136		

Rear Bearing Covers

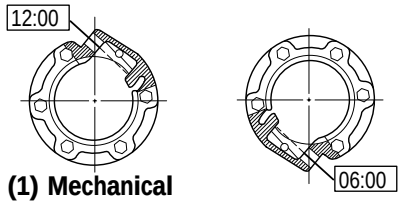

(1) Mechanical

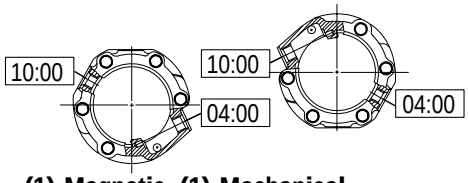

(1) Magnetic (1) Mechanical

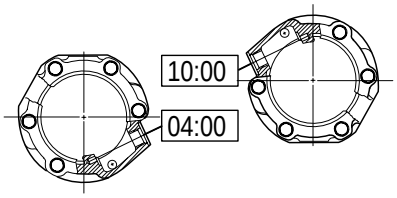

(1) Mechanical

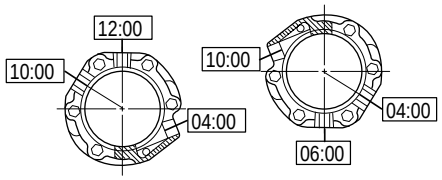

(2) Magnetic (1) Mechanical

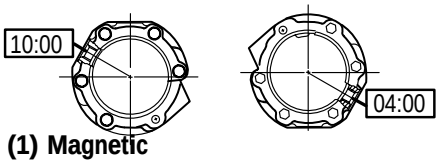

(1) Magnetic

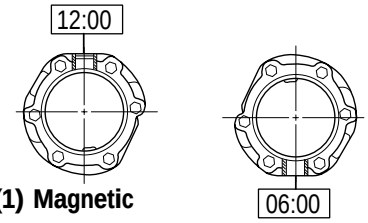

(1) Magnetic

Model Series	Speedo Type and Location	Production Threaded Sensor Brg. Cover	Service Threaded Sensor Brg. Cover	Production Push In Sensor Brg. Cover	Service Push In Sensor Brg. Cover
AT-1202 RTLO-9118-MT RTLO-11118-MT RTO-11/13109ATE RTO-14/16109ATE RT-11607L RTO-11607LL RT-12510 RTO-12513 RT-12515 RT-14608 RTO-14608LL RT-14609 RT-14610 RTLO-14610 RT-14/15613 RTLO-14613 RT-14615 RTO-15618 RTLO-14618 RTO-14/15813 RTLO-15/16610	(1) Magnetic Top of Cover	4302010 22048 20962	S-2119		
	(2) Magnetic Top and 60°	4300002 4302031	S-2119	4302575	S-2352
	(1) Mechanical Top 45°	22047	S-2119		
	(1) Mechanical Standard	22043 20220	S-2119		
	(1) Magnetic 60° from top	20221 22044	S-2119	4302574	S-2352
	(1) Magnetic 60° from top (1) Mechanical Standard	22045 4302008 20222	S-2119		
	(2) Magnetic Top of Cover and 60° from Top (1) Mechanical Standard	20223 4302009 22046 4301993	S-2119		

Rear Bearing Cover Clock Position

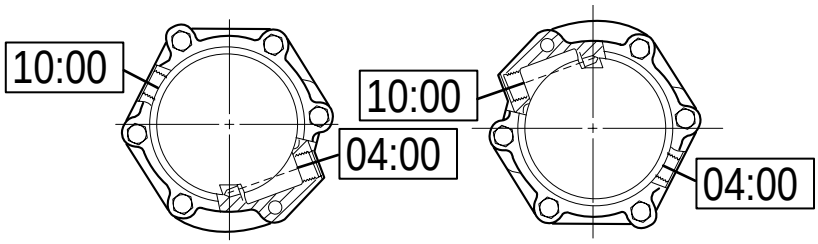

(1) Magnetic (1) Mechanical

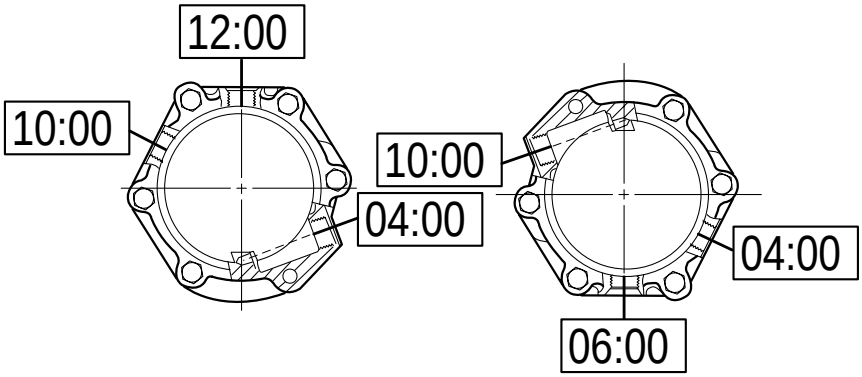

(2) Magnetic (1) Mechanical

11707LL/DLL, 11708LL, 11709, 11710, 11715, 12709, 12710, 12713, 13709, 13710, 13707LL/DLL/MLL, 14708LL, 11709MLL, 14709MLL, 14715, 15715

Model Series	Speedo Type and Location	Production Threaded Sensor Brg. Cover	Service Threaded Sensor Brg. Cover	Production Push In Sensor Brg. Cover	Service Push In Sensor Brg. Cover
RTO-11708LL RT-11709 RT-11710 RT-11715 RT-12709 RT-12710 RTLO-12713 RT-13709 RT-13710	(1) Magnetic 60° from top			4302572	S-2355
	(2) Magnetic Top of Cover and 60° from top	4302188	S-2106	4302571	S-2355
	(1) Magnetic 60° from top (1) Mechanical Standard	23368 4302025 22051	S-2106		
	(2) Magnetic Top of Cover and 60° from top (1) Mechanical Standard	22732 4302016	S-2106		

Rear Bearing Cover Clock Position

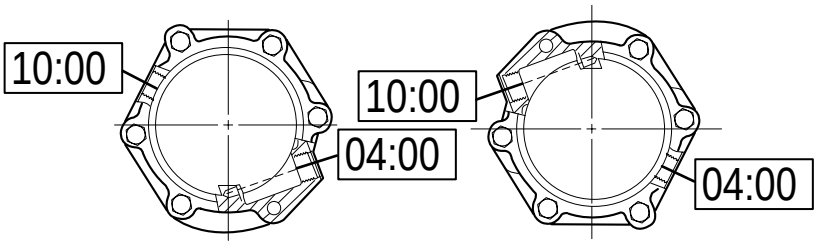

(1) Magnetic (1) Mechanical

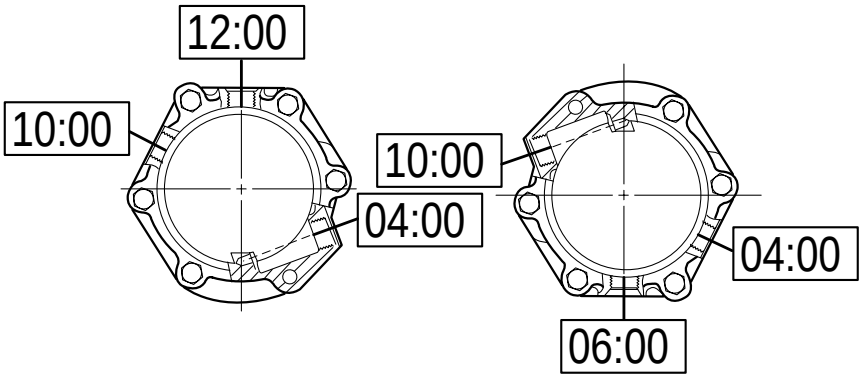

(2) Magnetic (1) Mechanical

11707LL/DLL, 11708LL, 11709, 11710, 11715, 12709, 12710, 12713, 13709, 13710, 13707LL/DILL/MLL, 14708LL, 11709MLL, 14709MLL, 14715, 15715

Model Series	Speedo Type and Location	Production Threaded Sensor Brg. Cover	Service Threaded Sensor Brg. Cover	Production Push In Sensor Brg. Cover	Service Push In Sensor Brg. Cover
RTO-11707LL RTO-11707DLL RTO-13707LL RTO-13707DLL RTO-13707MLL RTO-14708LL RTO-11709MLL RTO-14709MLL RT-14715 RT-15715	(1) Magnetic 60° from top			4302580	S-2353
	(2) Magnetic Top and 60° from top	4302190	S-2164	4302581	S-2353
	(1) Magnetic 60° from top (1) Mechanical Standard	4302026 23379 22052	S-2164		
	(2) Magnetic Top of Cover and 60° from top (1) Mechanical Standard	4302017 22733	S-2164		

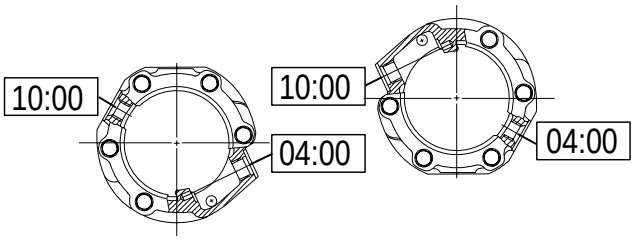

(1) Magnetic (1) Mechanical

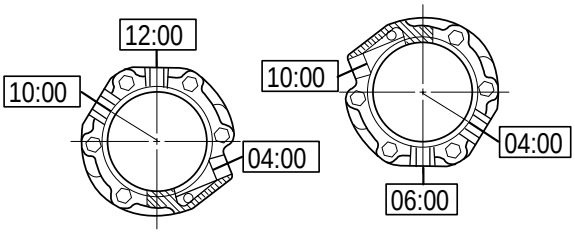

(2) Magnetic (1) Mechanical

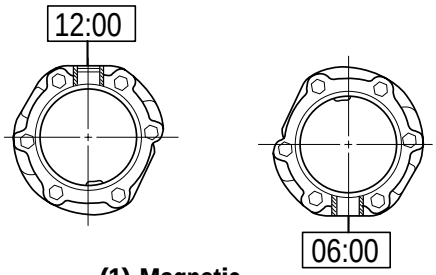

(1) Magnetic

Model Series	Speedo Type and Location	Production Threaded Sensor Brg. Cover	Service Threaded Sensor Brg. Cover	Production Push In Sensor Brg. Cover	Service Push In Sensor Brg. Cover
RT-14709 RT-14710 RTX-15710 RTX-16709 RTX-16710	(1) Magnetic 60° from top			4302588	S-2354
	(2) Magnetic Top of Cover and 60° from top	4302186	S-2159	4302589	S-2354
	(1) Magnetic 60° from top (1) Mechanical Standard	4302020 22968	S-2159		
	(2) Magnetic Top of Cover and 60° from top (1) Mechanical Standard	4302032 4300460	S-2159		

Rear Bearing Covers

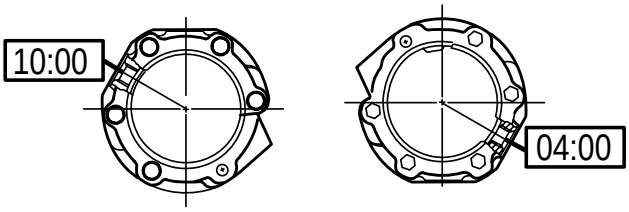

(1) Magnetic

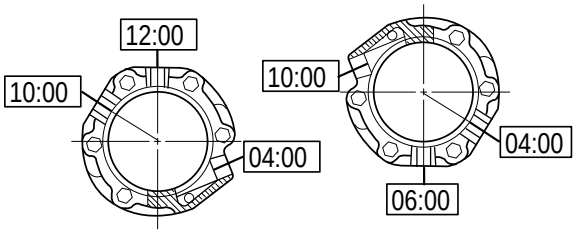

(2) Magnetic (1) Mechanical

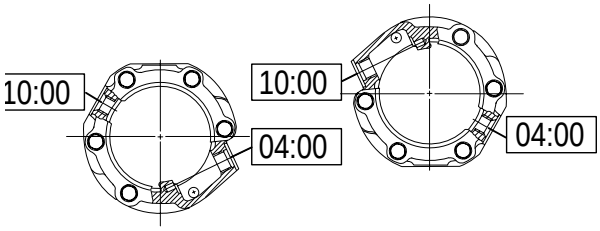

(1) Magnetic (1) Mechanical

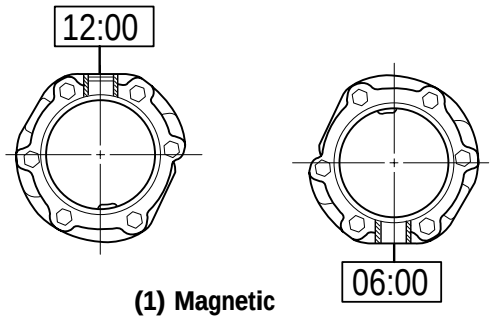

(1) Magnetic

Model Series	Speedo Location	Production Threaded Sensor Brg. Cover	Service Threaded Sensor Brg. Cover	Production Push In Sensor Brg. Cover	Service Push In Sensor Brg. Cover
RTLO-14713 RTLO-14718 RTLO-16713 RTLO-16718 RTLO-18718	(1) Magnetic 60° from top			4302580	S-2353
	(2) Magnetic Top of Cover 60° from top	4302359	S-2107	4302581	S-2353
	(1) Magnetic 60° from top (1) Mechanical Standard	4300892	S-2107		
	(2) Magnetic Top of Cover 60° from top (1) Mechanical Standard	4302341	S-2107		

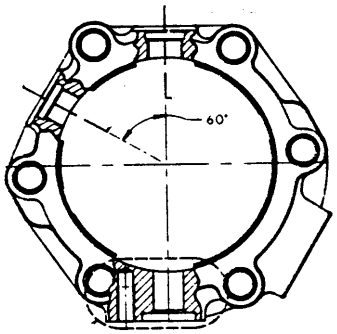

(2) Magnetic - Top & 60° From Top
(1) Magnetic - Bottom
Autoselect & Autoshift

Model Series	Speedo Type and Location	Production Threaded Sensor Brg. Cover	Service Threaded Sensor Brg. Cover	Production Push In Sensor Brg. Cover	Service Push In Sensor Brg. Cover
RTAO-14710B-AC RTAO-14710B-AS RTAO-14710C-AC RTAO-15710B/C-AC RTAO-16710B/C-AC	(3) Magnetic Top of Cover 60° from top Bottom	4302036 4301359	S-1992		
RTAO-11710B/C-AC RTAO-12710B/C-AC RTAO-13710B/C-AC	(3) Magnetic Top of Cover 60° from top bottom	4302556	S-2257		

Rear Bearing Covers

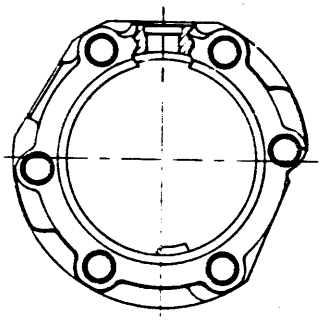

(1) Magnetic - Top

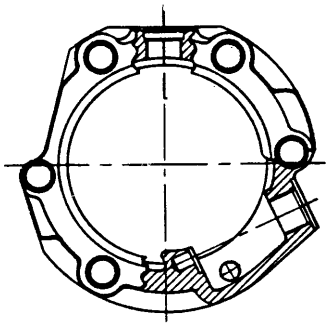

(1) Magnetic - Top
(1) Mechanical - Standard
(Clearance For
Power Synchronizer)

Model Series	Speedo Type and Location	Production Threaded Sensor Brg. Cover	Service Threaded Sensor Brg. Cover	Production Push In Sensor Brg. Cover	Service Push In Sensor Brg. Cover
RTO-11109-AT RTO-13109-AT RTO-14109-AT RTO-16109-AT	(1) Magnetic Top of Cover			4302578	S-2357
	(1) Magnetic Top of Cover (1) Mechanical Standard	4302027 23406	S-2113		

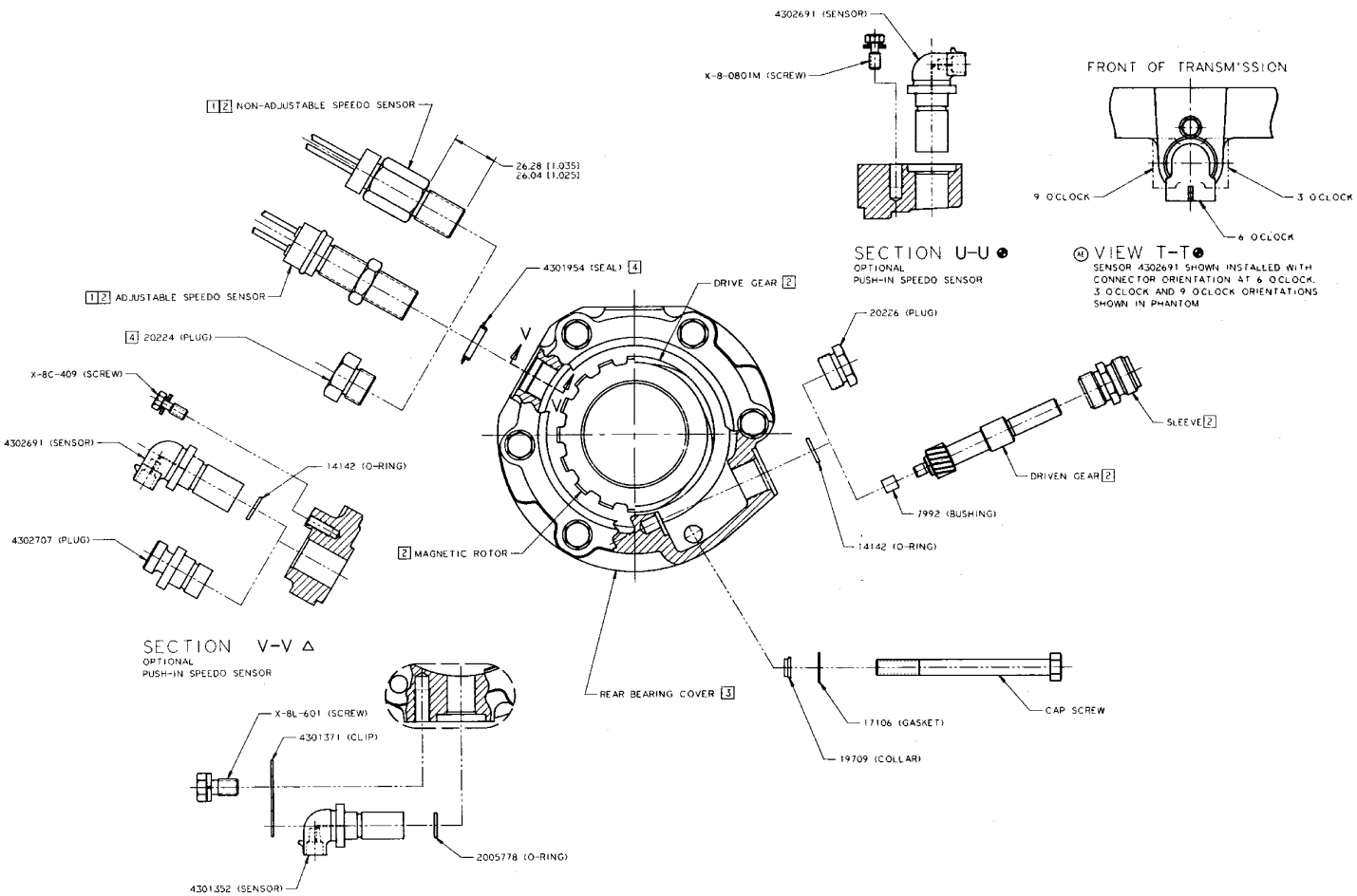

The O-ring assembled in mechanical speedometer opening *may* be used with mechanical speedometer sleeve.

Sealing Collar Instruction

To help eliminate oil seepage we have added a new nylon sealing collar for one capscrew on the rear bearing cover. To accept this sealing collar a chamfer was added to the hole. To assemble, place the 17106 Brass Washer in the capscrew, then assemble the 19709 Sealing Collar with the large end against the washer.

Yoke Installation

Before installing yoke make sure it is free of any contaminates. Apply a light coat of engine oil on the chamfered edge of the yoke sealing surface. This will help prevent seal lip roll over when installing the yoke.