## Special For FS-6106 Series

Left Mounting

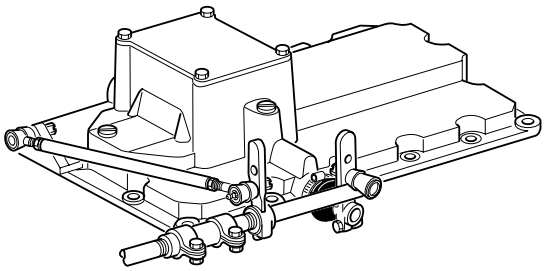

Right Mounting

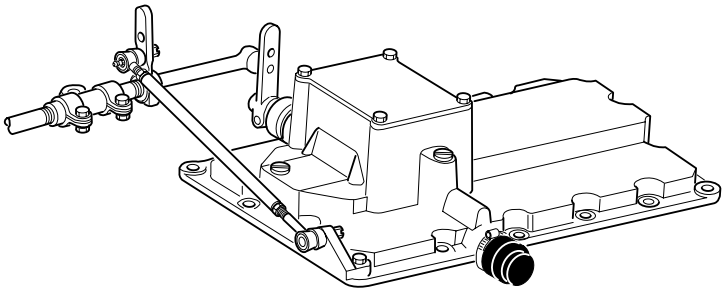

**For Additional Lever/Control Information Please See Lever/Control Illustrated List Form TRIP-0930**

## MR Control

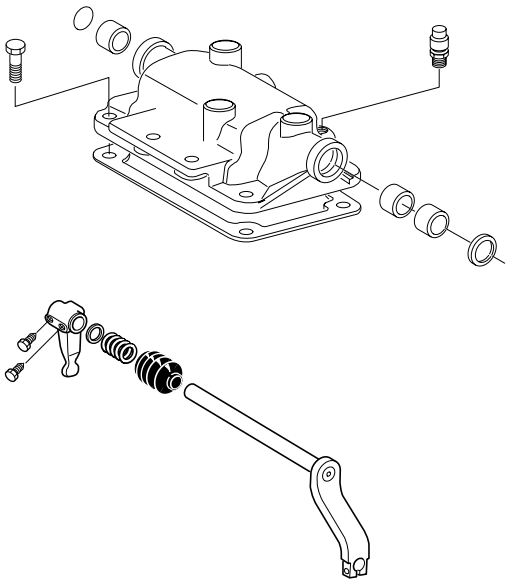

***Note:** Use lockwire at these positions

## Remote Control Service Assemblies

| Model Application | Part Number | Description |
|---|---|---|
| Master Control SRC-1 Service Replacement Assembly | S-1138 | With 23” straight lever. Also contains one U-joint and two set screws. |
| Remote Slave Control SRC-10 Service Replacement Assembly | S-1139 | Application: 0° Shift Shaft Angle and left-hand front or rear 10-3/8” centerline offset projection. Also contains: Mounting Studs, Nuts, Gasket, one U-joint and two Set Screws |
| Remote Slave Control SRC-118 Service Replacement Assembly | S-1140 | Application: 18° Shift Lever Angle and left-hand front 10-3/8” centerline offset projection. Also contains: Mounting Studs, Nuts, Gasket, one U-joint and two Set Screws. |
| Remote Slave Control SRC-10 Service Replacement Assembly | S-1410 | Application: 0° Shift Shaft Angle and right-hand front or rear 10-3/8” centerline offset projection. Also contains: Mounting Studs, Nuts, Gasket, one U-Joint and two Set Screws. |

SRC-0, SRC-18, SRC-30 replaced by SRC-10, SRC-118, SRC-130

SRC-20 and SRC-218 are especially intended for use with the T-11606, T-11607 (A-B), T-1056, and T-955 Series Transmissions. They reduce the lever movement for rail selection. They will also work on other models to reduce the lever movement for rail selection.

The SRC-4 slave is special for T-955 Series and is available in the 0°, 18° and the 30° housing.
The inner finger, 17062 item 59, is the only part that changes in the slave unit.

The SRC-4 master is intended to be used to reduce the shift lever movement, however, it will also correspondingly increase shift effort.

**For Additional Lever/Control Information Please See Lever/Control Illustrated Form TRIP-0930**

Q-Master Unit Construction

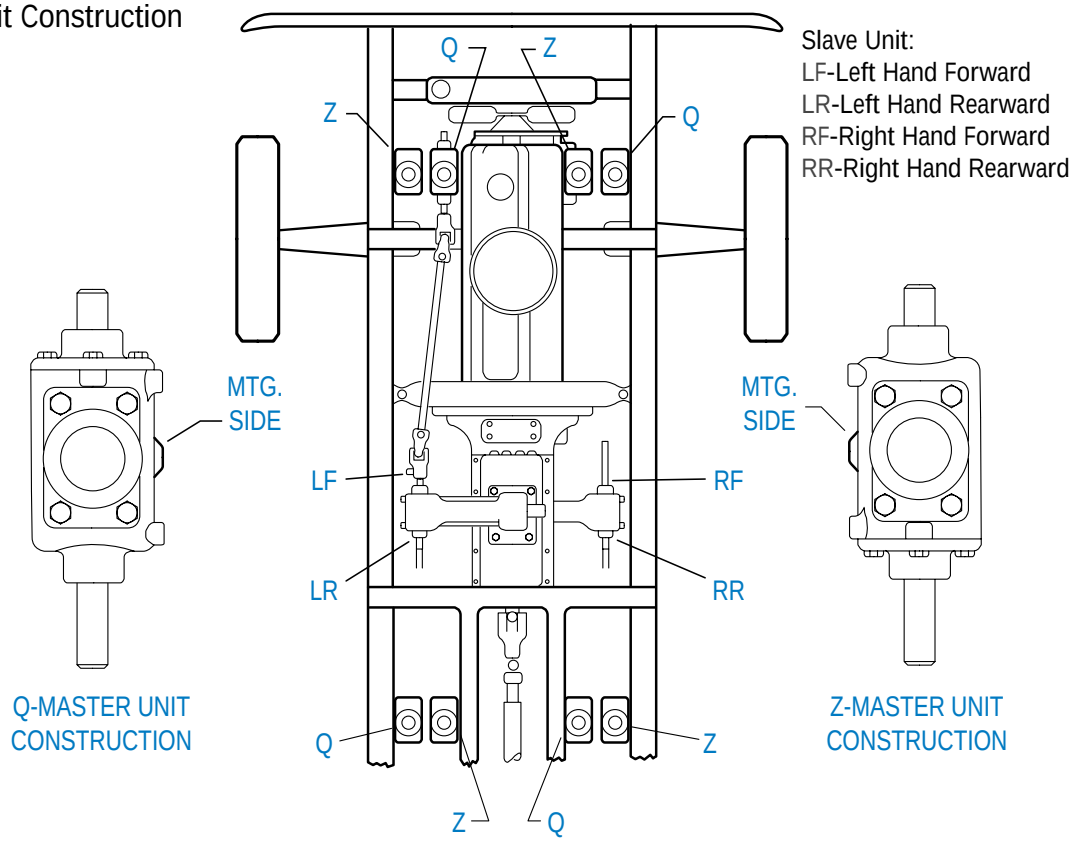


| Model | Application | Shift Shaft Angle | Centerline Offset | Shift Shaft Projection | Housing Projection | Weight |
|---|---|---|---|---|---|---|
| SRC-10 | 3 or 4 rail transmission | 0° | 10-3/8”<br>11-1/8” | Front or Rear | Right or Left | 13 lbs. |
| SRC-118 | 3 or 4 rail transmission | 18° | 10-3/8” | Front | Left | 13 lbs. |
| SRC-130 | 3 or 4 rail | 30° | 8-1/2” | Front | Left | 12 lbs. |
| SRC-20 | 4 rail | 0° | 10-3/8” | Front or Rear | Left | 17 lbs. |
| SRC-218 | 4 rail | 18° | 10-3/8” | Front | Left | 17 lbs. |

Housing
LRC 1
LRC 2

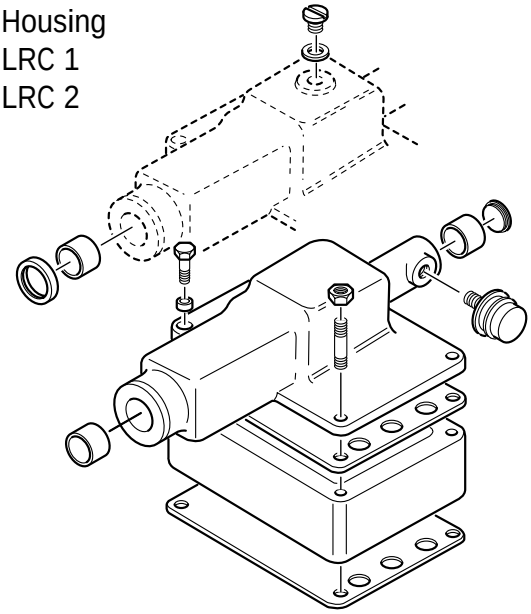

Housing
LRC 3
LRC 4

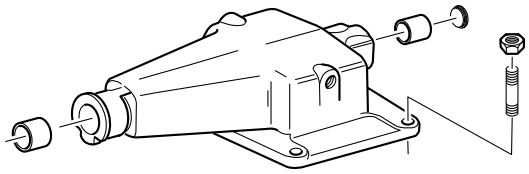

Parts of the LRC

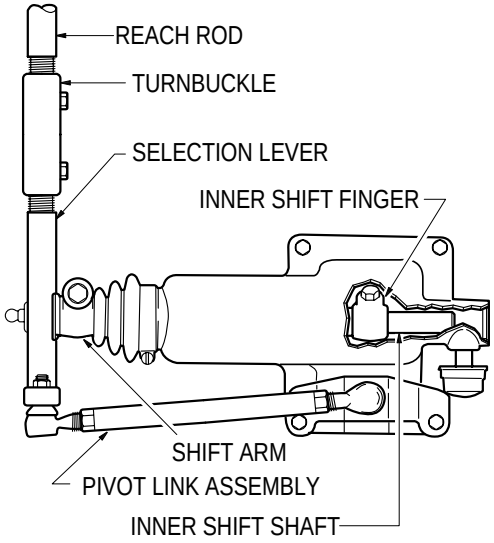


The SCR-4 Master is intended to be used to reduce the shift lever movement. However, it will also correspondingly increase shift effort.

## LRC Adjustment

Proper adjustment of the L.R.C. is necessary for smooth shift linkage operation. Use the procedure listed in service bulletin #97 and in the LRC illustrated parts list to insure correct adjustment.

**For Additional Lever/Control Information Please See Lever Control Illustrated List Form TRIP-0930**

LRC 1
LRC 2

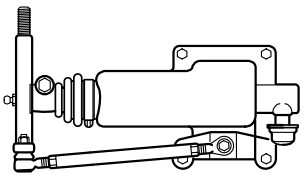

"RT" MODELS
T-11605
T-11606
T-11607

LRC 1 or LRC 3
INSTALL TYPE B

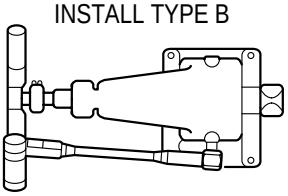

LRC 2 or LRC 4
INSTALL TYPE D

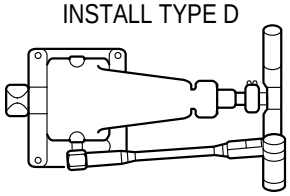

LRC 1 or LRC 3
INSTALL TYPE E

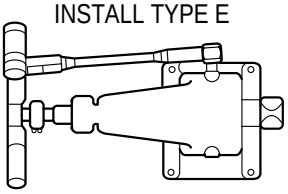

LRC 2 or LRC 4
INSTALL TYPE H

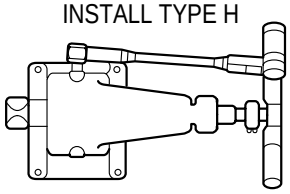

LRC 1 or LRC 3
STD. Bar Housing left hand front or rear
F Bar Housing right hand front or rear

**Note:** For Reverse Mounted Rear Engine
LRC 1 or LRC 3
Std. Bar Housing, right hand front
F Bar Housing left hand front

LRC 3
LRC 4

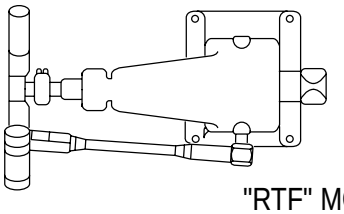

"RTF" MODELS

LRC 2 or LRC 4
INSTALL TYPE A

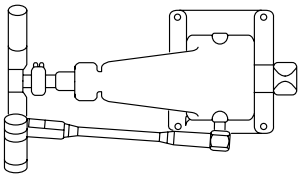

LRC 2 or LRC 4
INSTALL TYPE E

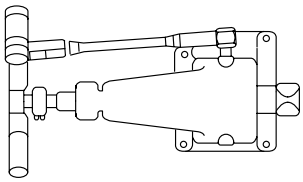

LRC 1 or LRC 3
INSTALL TYPE C

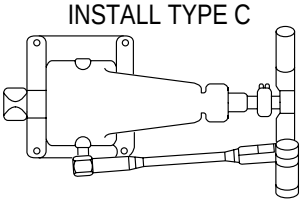

LRC 1 or LRC 3
INSTALL TYPE G

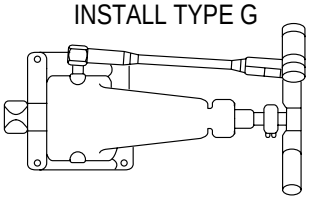

LRC 2 or LRC 4
STD. Bar Housing right hand front or rear
F Bar Housing left hand front or rear

LRC 2 or LRC 4
STD. Bar Housing left hand front
F Bar Housing right hand front

## Rearward Offset Installation

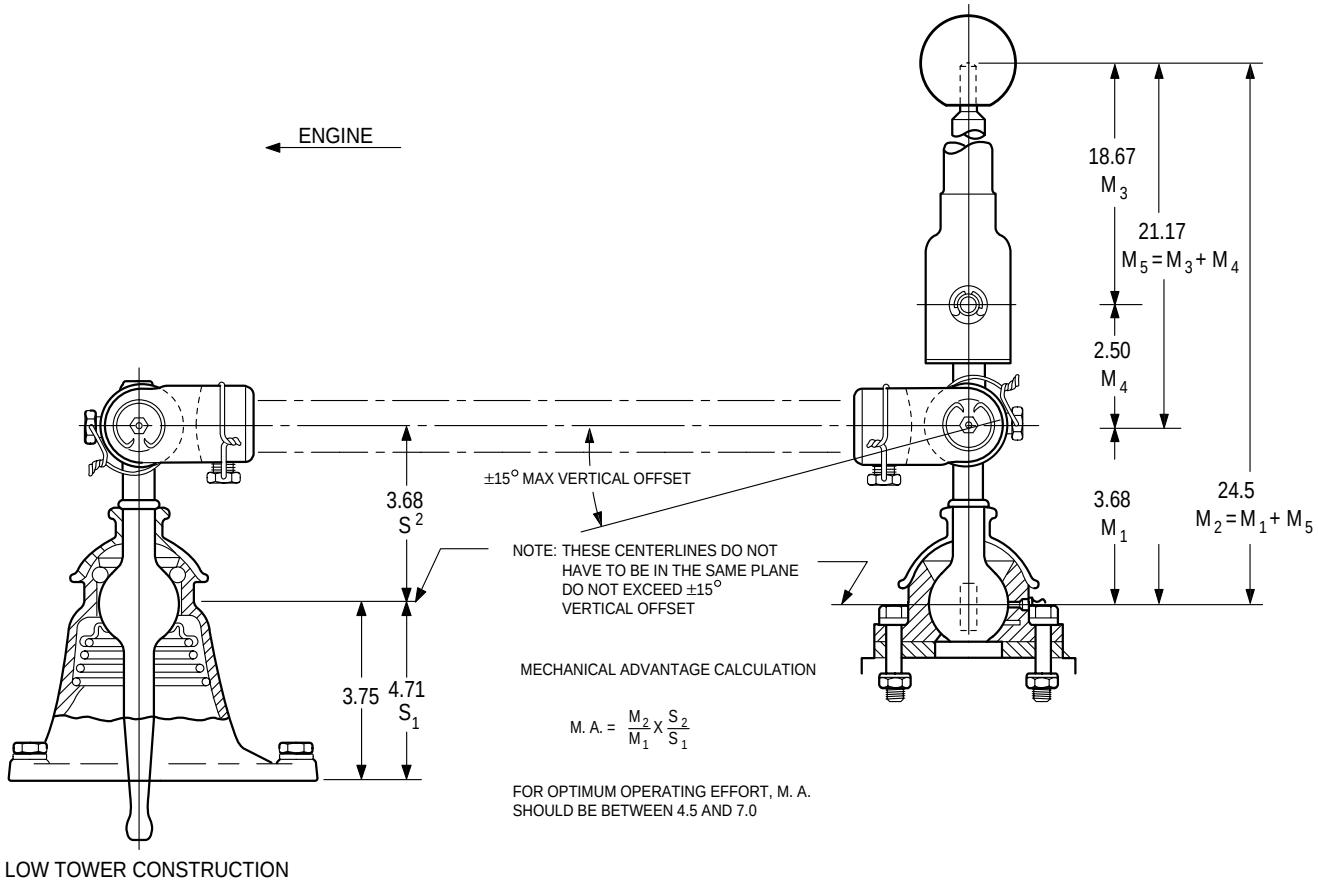


The RLC Control was designed for a conventional truck to eliminate the need for using a long severely bent shift lever when the shift lever location in the cab is not in the same location as the shift lever opening in the transmission.

**For Additional Lever/Control Information Please See Lever/Control Illustrated List Form TRIP-0930**

## Forward Offset Installation

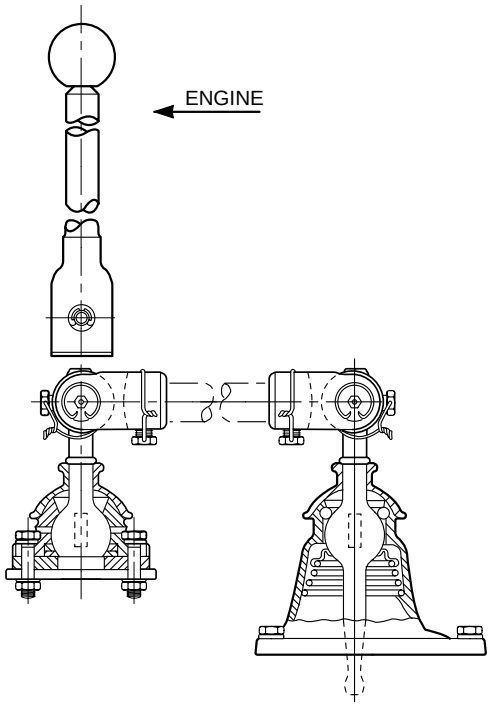


## Rearward Offset Installation
## Slave Unit Hi Tower Construction

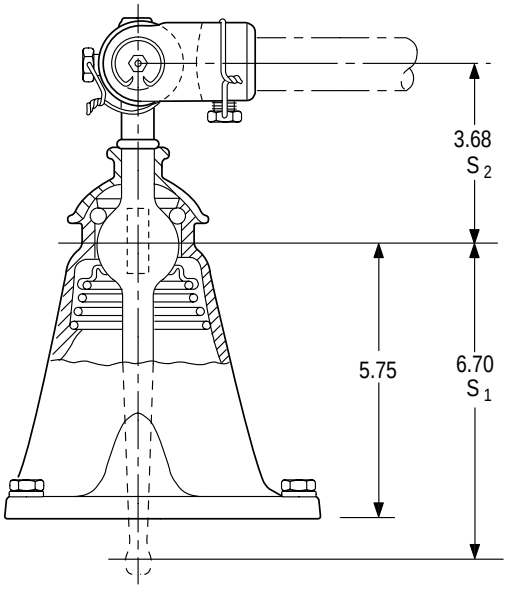


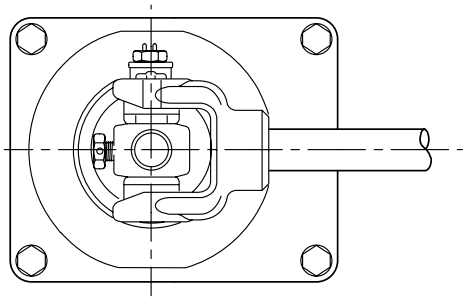

## Reach Rod

*Furnished by Customer*

Note: May be made from 7/8” cold drawn

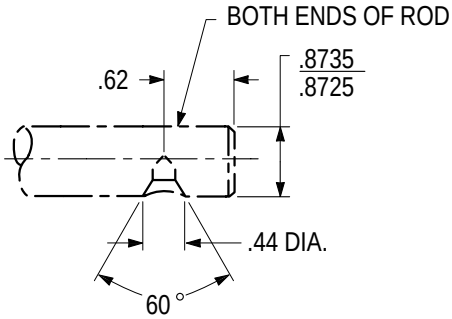

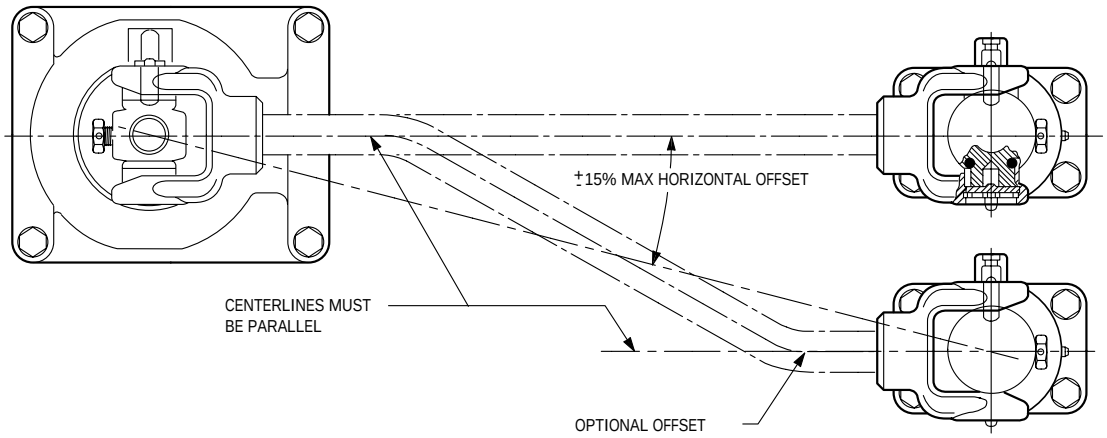
## Rearward Offset Installation