Lighting Control Systems —Pow-R-Command

Contents

Lighting Control Systems—Pow-R-Command
General Information 23.0-2
Pow-R-Command Family 23.0-2
Pow-R-Command Selection Guide 23.0-3
Pow-R-Command 5000
General Description 23.1-1
Pow-R-Command 2000
General Description 23.2-1
System Configurations 23.2-2
Pow-R-Command 1000
General Description 23.3-1
System Configurations 23.3-2
Pow-R-Command 750
General Description 23.4-1
System Configurations 23.4-2
Pow-R-Command 100
General Description 23.5-1
System Configurations 23.5-2
Pow-R-Command 25
General Description 23.6-1
System Configurations 23.6-1
Building Automation Systems (BAS) 23.6-2
Pow-R-Command 2000/1000/75
Panel Technical Data . . . . . **See Tab 22 Panelboards**
Specifications

See Eaton's *Product Specification Guide*, available on CD or on the Web.

CSI Format:	1995	2010
Pow-R-Command 750	**Section 16147D**	**Section 26 24 16.11**
Pow-R-Command 100	**Section 16147E**	**Section 26 24 16.13**
Pow-R-Command 25	**Section 16147F**	**Section 26 24 16.16**

Pow-R-Command Family

Pow-R-Command Family

Eaton's Pow-R-Command™ family of lighting control panelboards is designed to meet the lighting control needs for buildings of all sizes and complexity. The system incorporates microprocessor-based distributed intelligence within a traditional panelboard, simplifying wiring in the field. The system can be networked over customers' LAN or directly interfaced to the Internet, allowing for password protected Web access. The panelboard design allows the Pow-R-Command lighting control system to meet short-circuit ratings, as required by the National Electrical Code® (NEC®).

Lighting Control Overview

Traditional lighting control employs lighting contactors or relay panels to turn groups of lighting on or off. Input devices are typically time clocks, photo cells, wall switches, or, in more sophisticated applications, contact inputs from a building automation system (BAS). Pow-R-Command is a lighting control panelboard with remote controllable circuit breakers. These controllable circuit breakers perform a dual function:

1. They provide the overcurrent and overload protection for the circuit.
2. They perform the same function as relays and contactors in traditional lighting control systems, opening and closing the circuit in response to a remote signal.

Design Considerations

Short-Circuit Protection: In the past, contactors or relay panels were mounted close to the lighting load and short-circuit ratings were not a major concern. Today, most of the lighting control devices are located in electrical rooms, often adjacent to the panelboards that feed them. These devices are subjected to short-circuit conditions almost as high as those of the electrical distribution equipment. The current version of the National Electrical Code now requires that these lighting control devices carry a short-circuit rating (Article 110.10). Although some traditional lighting control components are available with short-circuit ratings, these ratings are limited and may require upstream fusing. **A lighting control panelboard makes meeting the requirements of NEC 110.10 as simple as specifying the short-circuit rating of the panelboard.**

Flexibility: Lighting control panelboards allow simple and inexpensive changes during startup. Contactor and relay panels often require rewiring to make changes in the field.

Choices: Eaton's lighting control panelboards offer varying levels of flexibility, from six zones per panel with the Pow-R-Command 25, up to 250 zones per panel with the Pow-R-Command 2000 and PC Central software.

Space: Lighting control panelboards eliminate contactor panels and/or relay panels, freeing up valuable wall space. Pow-R-Command panels are the same width as standard panelboards.

Retrofit Applications: Retrofitting traditional lighting control methods into an existing electrical distribution system often requires extensive rewiring and unwanted downtime. In most cases, a Pow-R-Command panel interior can be installed into an existing panelboard back box, and the cables can be re-terminated on the new circuit breakers, with minimal downtime.

Installation Considerations

Simplicity: Lighting control panelboards are as easy to install as standard panelboards. There are no additional components to install.

Labor: Because contactors and relays are eliminated, the labor associated with installing them and the additional cables and conduit associated with them is eliminated.

Startup: Startup for the Pow-R-Command panelboards is straightforward. The PRC25 requires no startup. It is prewired at the factory. The PRC100 is provided with factory startup assistance for trouble-free installation. The PRC750 is provided with an LCD display and keypad for on-site programming. The PRC1000 and PRC2000 are programmed over the network. They have an optional display available for local interface.

Operational Considerations

Failure Modes: If a lighting contactor or relay fails to operate due to a mechanical or control system failure, it is very difficult to control the lights manually. Often, it is necessary to hardwire around the device on a temporary basis. With a lighting control panelboard system, the circuit breaker can be manually switched on or off as necessary until the system is back in operation.

Flexibility: In many cases, the lighting control scheme may change over the life of the facility. With traditional lighting control methods, changes require major rewiring and facility downtime. Breaker control schemes can be changed within the lighting control panelboard, often with a simple modification through software.

Seismic Qualification

Refer to **Tab 1** for information on seismic qualification for this and other Eaton products.

Pow-R-Command 2000 (PRC2000)

Eaton's PRC2000 is a microprocessor-based programmable lighting control system that can be used to control all of the lighting in your industrial facilities, high-rise office buildings and airports. Being on the cutting edge of technology, the Pow-R-Command 2000 is an IP-based device with an embedded Web server. Capable of being used in both standalone and networkable applications, the PRC2000 can incorporate both standard branch-mounted breakers and controllable thermal-magnetic breakers for tailored control. The System Controller also includes load override, holiday scheduling, one-shot or event schedules, off warning to tenants, memory loss protection, hardware diagnostics and real-time clock for optimal energy management functions. The PRC2000 also incorporates the ability to communicate with networked devices over the Building Automation and Control Network (BACnet) protocol. BACnet is an industry standard protocol and provides increased flexibility in component and device selection for the control system. Consult your local Eaton representative for availability of additional protocols.

Pow-R-Command 1000 (PRC1000)

Eaton's PRC1000 is a microprocessor-based programmable lighting control system. With ratings from 100–400A, the PRC1000 can be used as a stand-alone panelboard or networked as a system. The panelboard uses both branch mounted standard breakers through 100A, and controllable thermal-magnetic breakers controlled by the Pow-R-Command 1000 System Controller. The System Controller also includes load override, holiday scheduling, one-shot or event schedules, off warning to tenants, memory loss protection, hardware diagnostics and real-time clock for optimal energy management functions. The PRC1000 system contains networkable intelligence and provides automated switching of branch circuit breakers.

Pow-R-Command 750

Designed for standalone applications, Eaton's PRC750 is a premier microprocessor-based lighting control system that can be used to control all of the lighting in your industrial facilities, high-rise office buildings and airports. A single PRC750 panel can be connected to a maximum of three expansion panels for the ability to control up to a total of 168 Smart Breakers™. The PRC750 also boasts load override, holiday scheduling, memory loss protection, astronomical time clocks and scheduling, 16 switch inputs, and alarm and message log features.

Pow-R-Command 100 (JCI-100)

Eaton's PRC100 panelboard system offers the broadest range of energy control in the industry using stand-alone PRC100 panelboards or a network of PRC100 panelboards. The PRC100 system is ideal for large, medium and small facilities with lighting control systems that require frequent changes, networkable panelboards, remote access, or all of the above.

Pow-R-Command 25 (PRC25)

Eaton's PRC25 panelboard replaces contactors and relay panels in lighting control and other load switching systems. It is the most basic and cost-effective way to remotely control loads. The PRC25 is ideal for any building that requires a fixed lighting control scheme with a low installed cost. The PRC25 can be controlled by an external time clock, building management system, low-voltage switches or photocell.

Table 23.0-1. Pow-R-Command Selection Guide

Controller	PRC25	PRC100	PRC750	PRC1000	PRC2000
Required Eaton startup and integration	No	Yes	No	Yes	Yes
Inputs					
Low-voltage switch	6	4	8	8	8
Universal (switch or analog)	0	8	8	8	8
Digital switch network	No	No	No	Yes	Yes
Optional switch input expander	0	48	0	48	48
Total inputs	6	64	16	64	64
Outputs					
Outputs digital (maximum controllable zones)	6	4	16	75	75
Analog	0	4	0	4	4
Universal I/O module	No	Yes	No	Yes	Yes
Telephone override	No	Yes	No	Yes	Yes
Data logging	No	Yes	No	Yes	Yes
Remote access	No	Yes	No	Yes	Yes
Power supply for external devices	N/a	Yes	Yes	Yes	Yes
Maximum number of loads (breaker/relay)	42	42	168	168	168
Number of satellite panels	0	0	7 ①	7 ①	7 ①
Manual override	Yes	Yes	Yes	Yes	Yes

① Each rail drives up to 21 breakers. Rails can be distributed individually over a total of eight panels (maximum SLAN wire length of 150 feet).

Table 23.0-1. Pow-R-Command Selection Guide (Continued)

Controller	PRC25	PRC100	PRC750	PRC1000	PRC2000
Outputs (Continued)					
Dimming	No	Yes	No	Yes	Yes
Maximum number of dimming ballasts	0	160	0	160	160
Daylight harvesting (using dimming ballasts)	No	Yes	No	Yes	Yes
Daylight switching (on/off circuit switching)	Yes	Yes	Yes	Yes	Yes
Time clock	No	Yes	Yes	Yes	Yes
Time schedules	No	Yes	Yes	Yes	Yes
Scheduling zones	N/A	75	75	75/250 ①	75/250 ①
On/off periods per schedule	N/A	50	50	50	50
Holidays	N/A	30	30	30/16 ②	30/16 ②
Blink notice	No	Yes	Yes	Yes	Yes
Maximum override time (hrs)	N/A	24	24	24	24
RS-232 port	No	No	No	No	No
RS-485 port	No	Yes	No	Yes	Yes
Ethernet port	No	No	No	No	Yes
Ethernet via external Gateway	No	Yes	No	Yes	Yes
Input/output matrix across controllers	No	Yes	No	Yes	Yes
Input/output matrix within controller	No	Yes	Yes	Yes	Yes
Local LCD/LED display	No	No	Yes	Option	Option
Local LED status indicators	Yes	Yes	Yes	Yes	Yes
Non-volatile program memory	No	Yes	Yes	Yes	Yes
Battery backup for program memory	N/A	10 years	10 years	10 years	10 years
Clock memory backup	N/A	10 years	10 years	10 years	10 years
Flash firmware memory	N/A	No	Yes	Yes	Yes
Protocols					
Modbus® ASCII/RTU	N/A	Yes	No	No	No
Modbus TCP	N/A	No	No	No	No
Johnson Controls® N2	N/A	Yes	No	No	No
BACnet	N/A	Yes	No	Yes	Yes
LonWorks®	N/A	No	No	No	No
SOAP/XML	N/A	Yes	No	Yes	Yes
OPC	N/A	Yes	No	Yes	Yes
Browser Access					
TCP/IP external device	N/A	Yes	No	Yes	Yes
Built-in Web Server					
TCP/IP	N/A	No	N/A	Yes ③	Yes
BACnet/IP server	N/A	No	N/A	N/A	Yes
Standards					
UL® 916 energy management equipment	Yes	Yes	Yes	Yes	Yes
California Title 24	—	Yes	Yes	Yes	Yes
NEC 110.10	—	Yes	Yes	Yes	Yes
UL 67 panelboards	Yes	Yes	Yes	Yes	Yes
CSA® C22.2 #29 panelboards	Yes	Yes	Yes	Yes	Yes
Baud rate	N/A	9.6k	9.6k	9.6k	9.6k
Maximum controllers/network	N/A	120	1	1800	1800
Password protected	No	Yes	Yes	Yes	Yes
Mounting					
Three-pole breaker housing	No	No	No	No	No
External bracket mount available	Yes	Yes	Yes	Yes	Yes

① 250 additional schedules with optional Network Interface Box NIB.
② 16 additional holidays with optional Network Interface Box NIB.
③ Ethernet TCP/IP access with optional terminal server.

Pow-R-Command 5000

Pow-R-Command 5000 Controller

General Description

Eaton's Pow-R-Command 5000 (PRC5000) is a microprocessor-based building automation and energy-management system capable of controlling energy and demand using remotely located unitary controllers. The system performs the functions of scheduling equipment, demand limiting, duty cycling, monitoring, reporting, trend logging and implementing control strategies.

Features and Benefits

- Modular hardware with flexible user configurations
- Non-volatile storage of all database and control information
- Clock and calendar with battery backup
- Two multidrop RS-485 LANs
- Up to 15 individual unitary LANs coordinated through a single PRC5000, two of these may be wired directly to the PRC5000; the rest are connected via the facility's Ethernet LAN
- Up to 120 universal unitary controllers per LAN to control many different types of systems: HVAC, pumps, conveyors, etc.
- Ethernet port for easy access to remote unitary LANs over existing Ethernet LAN wiring
- RS-232 serial connection for local terminal or modem
- Automatic fail-safe mode
- 250 schedules, 250 programming monitors and 50 control structures
- Supports remote firmware upgrades
- Optimum START/STOP, equipment scheduling
- Trend collection
- Maintenance and security alarm messages
- Terminal interface with screen editor data entry
- Load shedding, demand limiting energy management, four meters
- Reports alarms or messages of adverse conditions by e-mail or pager over modem or network
- Automatic communications between remote sites and the central system with automatic logon and password exchange

Components

- Linux®-based operating system for secure operations, communicating TCP/IP via the Web
- Integrated Web-server serves up canned or custom Web pages stored directly on the controller. These pages can be viewed using any standard Web-browser and provides the interface for monitoring and controlling the system. Canned and custom Web pages then can be viewed with a standard Internet browser
- Monitor the building and manually control by Web page interface
- Universal Unitary Controllers
  - User configurable to control pumps, fans, compressors, conveyors, dampers, etc.
  - Accept inputs from pushbutton stations, thermostats, photo sensors, KYZ meter pulses and many other device outputs
  - Addressable with unique address
  - Up to 120 UUC per RS-485 network
  - Basic model (UUC-0) has four direct digital inputs (linked with four pulse counters), eight analog inputs, three analog outputs and two thermostat ports
  - The cost-efficient UUC-4, has four digital outputs (TRIAC or relay) each with an LED status light and analog/universal inputs (no dedicated digital inputs), and one thermostat port
  - The multi-functional UUC-8 can be ordered with four configuration options (TRIAC or relay output options as well as power options). Eight digital outputs, 12 digital inputs, LED status indication of all digital outputs and inputs, eight analog/universal inputs, three analog outputs, two thermostat inputs and LED status lights for controller power and LAN receive/send data
- U-LAN, the unitary controller LAN operates at 9600 baud on a pair of wires using standard RS-485 drivers, up to 4000 feet on a single twisted-shielded cable. RS-485 repeaters should be used for when more than 4000 feet is required

This page intentionally left blank.

Pow-R-Command 2000

Pow-R-Command 2000 Panelboard

General Description

Eaton's Pow-R-Command 2000 is a microprocessor-based programmable lighting control system with an embedded Web server and BACnet native capability. The PRC2000 can be used as a standalone panelboard or networked as a system.

Features

- Optional LCD display and keypad
- Web pages
- Memory loss protection
- Power failure/brownout recovery
- Astronomical real-time clock
- PC Central control software
- Time scheduling
- Holiday scheduling
- Digital and analog I/O
- Input to output switch matrix
- Messages/alarms
- Daylight optimization
- Switch Override Controller (SOC)
- Telephone Override Controller (TOC)
- Digital switch network

Components

- Controller includes embedded Web server
- Intelligent power switching equipment
- LCD programming display and keypad
- Application Specific Controllers (ASCs)
- PC Central control software
- Technical support
  - Web site
  - E-mail
  - Telephone

Intelligent Power Switching Equipment

Pow-R-Command 2000 panelboards are offered from 100 to 400A in main lug and main breaker configurations. Available voltages are 120/240, 208Y/120 and 480Y/277, single-phase and three-phase. The panelboard uses both branch-mounted standard breakers through 100A, and controllable thermal-magnetic breakers up to 30A that are controlled by the Pow-R-Command 2000 System Controller. The panels are available in column width. The Pow-R-Command 2000 controllers provide the ability to directly operate up to eight breaker control busses. Such a capability allows a single controller to directly operate up to 168 GHQRSP and BABRSP controllable circuit breakers, with individual control and status feedback of each controllable breaker.

The System Controller also includes load override, holiday scheduling, one-shot or event schedules, off warning to tenants by blinking lights, memory loss protection, power failure/brownout protection, hardware diagnostics, a real-time clock and 16 dry contact switch inputs. Up to 100 digital switches can be connected.

Equipment within the Pow-R-Command 2000 system may be networked. Up to 120 panelboards may be networked over an ethernet cable without the need for a personal computer in the system.

The Pow-R-Command 2000 panelboard is listed UL 67 for panelboards and UL 916 for energy management equipment.

BACnet Protocol

The PRC2000 unit is capable for integration within BACnet native control networks. BACnet is a communications protocol widely used in building automation and controls and adds even more flexibility to the control system. Consult your local Eaton representative for additional network protocols.

23

System Configurations

PRC2000 Network Architecture

Containing an embedded Web server, each Pow-R-Command 2000 system is programmed with a unique IP address for communication via any standard Internet browser. Web access is standard with the PRC2000. Eight 21-circuit control busses configured as needed throughout PRL1A and 2A panels. The PRC2000 directly interfaces to a BACnet Client Workstation.

Breaker Control Busses (BCB)

Every Pow-R-Command Expansion Panelboard can be configured with the left and/or right breaker control busses installed. When using a PRC EP panel with one BCB, the remote controlled breakers are placed on the side with the control bus. Standard and controlled breakers can be distributed anywhere in the panel as needed.

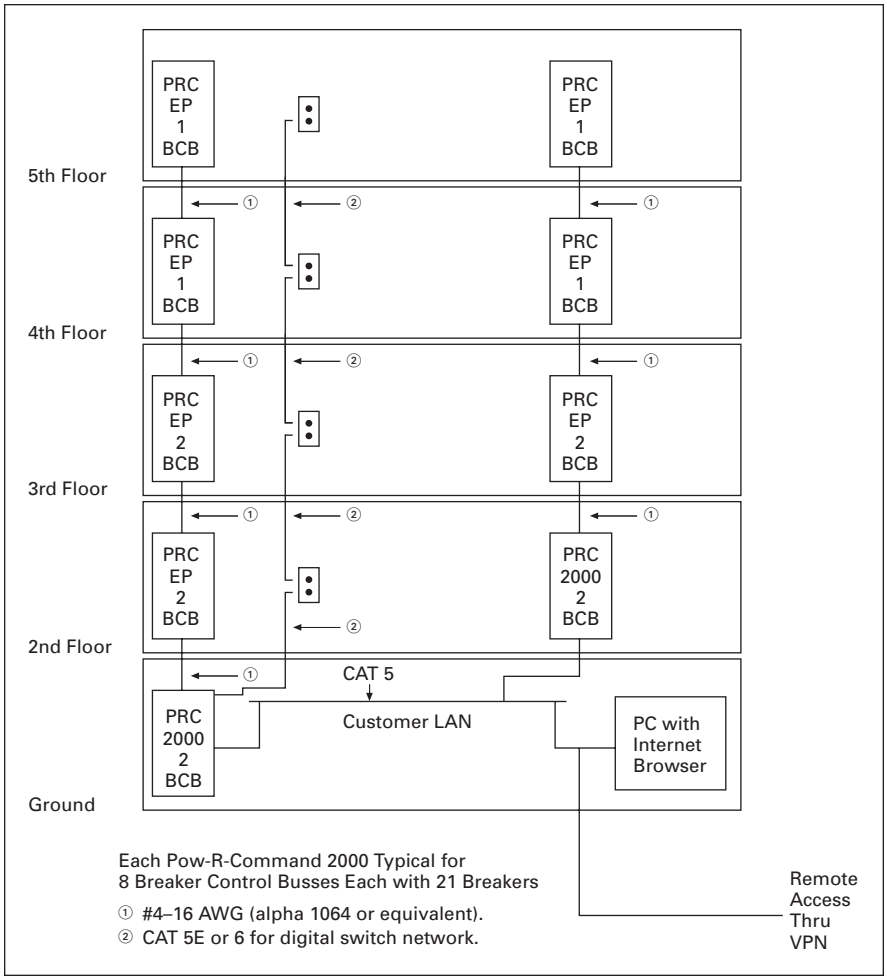

Figure 23.2-1 PRC2000 Breaker Control Busses

Pow-R-Command 1000

Pow-R-Command 1000 Panelboard

General Description

Eaton's Pow-R-Command 1000 is a microprocessor-based programmable lighting control system. The PRC1000 can be used as a standalone panelboard or networked as a system.

Features

- LCD display and keypad
- Memory loss protection
- Power failure/brownout recovery
- Astronomical real-time clock
- Control software
- Time scheduling
- Holiday scheduling
- Input to output switch matrix
- Messages/alarms
- Daylight optimization
- Switch Override Controller (SOC)
- Telephone Override Controller (TOC)

Components

- Intelligent power switching equipment
- LCD programming display and keypad
- Application Specific Controllers (ASCs)
- Software and support
- Integration components

Intelligent Power Switching Equipment

Pow-R-Command 1000 panelboards are offered from 100 to 400A in main lug and main breaker configurations. Available voltages are 120/240, 208Y/120 and 480Y/277, single-phase and three-phase. The panelboard uses both branch-mounted standard breakers through 100A, and controllable thermal-magnetic breakers up to 30A that are controlled by the Pow-R-Command 1000 System Controller. The panels are available in column width. The Pow-R-Command 1000 controllers provide the ability to directly operate up to eight breaker control busses. Such a capability allows a single controller to directly operate up to 168 GHQRSP and BABRSP controllable circuit breakers, with individual control and status feedback of each controllable breaker.

The System Controller also includes load override, holiday scheduling, one-shot or event schedules, off warning to tenants by blinking lights, memory loss protection, power failure/brown-out protection, hardware diagnostics, a real-time clock and 16 dry contact switch inputs.

Equipment within the Pow-R-Command 1000 system may be networked. Up to 120 panelboards may be networked over a shielded twisted pair network cable without the need for a personal computer in the system.

The Pow-R-Command 1000 panelboard is listed UL 67 for panelboards and UL 916 for energy management equipment.

23

System Configurations

PRC1000 Application

Customizable extension panels allow for combinations of both regular and remote controllable breakers for individualized solutions as shown in this riser diagram. Eaton's Pow-R-Command 1000 Controller can support up to eight breaker control busses contained within four standard panelboards or split between a maximum of eight. When connected to the building's Internet, all master and expansion panels can be controlled.

Breaker Control Busses (BCB)

Every Pow-R-Command Expansion Panelboard can be configured with the left and/or right breaker control busses installed. When using a PRC EP panel with one BCB, the remote controlled breakers are placed on the side with the control bus. Standard and controlled breakers can be distributed anywhere in the panel as needed.

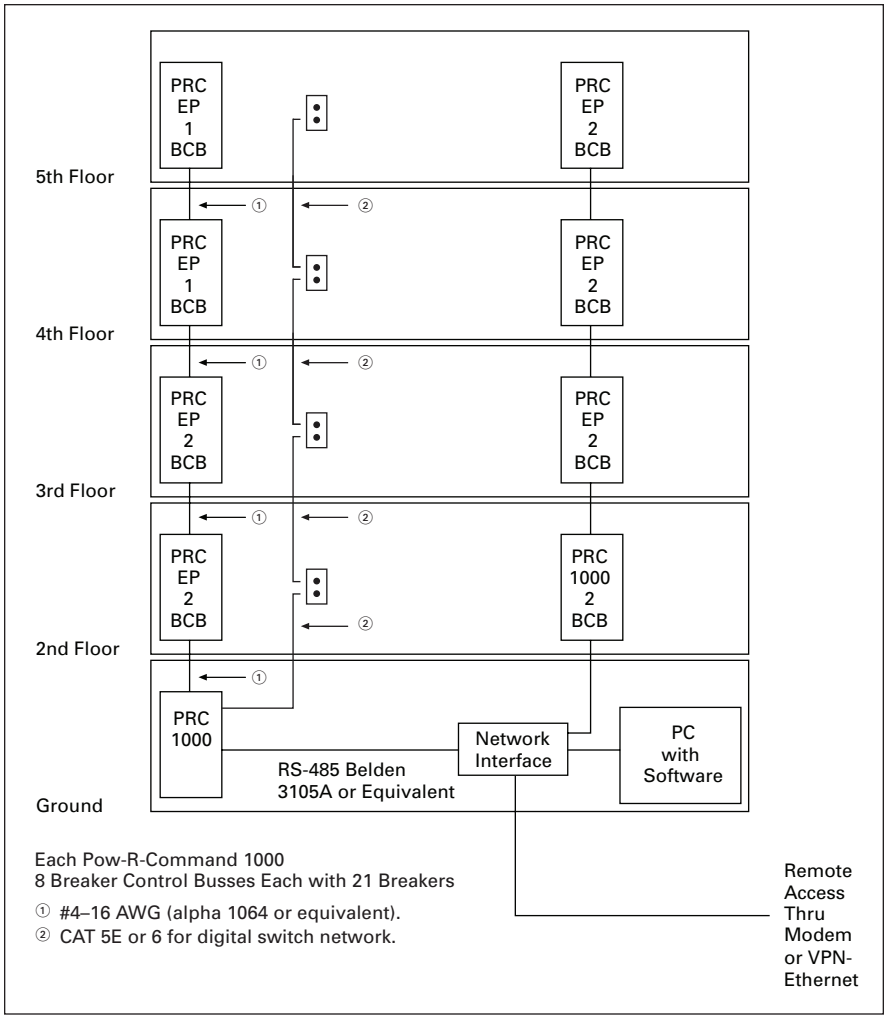

Figure 23.3-1. PRC1000 Breaker Control Busses

Pow-R-Command 750

Pow-R-Command 750 Panelboard

General Description

Eaton's Pow-R-Command 750 is a microprocessor-based programmable lighting control system. The Pow-R-Command 750 can be used as a standalone panel, or the user has the option to connect up to three expansion panels to the 750 creating its own standalone subnetwork.

Features

- LCD display and keypad
- Memory loss protection
- Power failure/brownout recovery
- Astronomical real-time clock
- Time scheduling
- Holiday scheduling
- Input to output switch matrix
- Messages/alarms
- Daylight control (via photocell)

Components

- Intelligent power switching equipment
- LCD programming display and keypad
- Integration components

Intelligent Power Switching Equipment

Pow-R-Command 750 panelboards are offered from 100 to 400A in main lug and main breaker configurations. Available voltages are 120/240, 208Y/120 and 480Y/277, single-phase and three-phase. The panelboard uses both branch-mounted standard breakers through 100A, and controllable thermal-magnetic breakers up to 30A that are controlled by the Pow-R-Command 750 System Controller. The panels are available in column width. The Pow-R-Command 750 controllers provide the ability to directly operate up to eight breaker control busses. Such a capability allows a single controller to directly operate up to 168 GHQRSP and BABRSP controllable circuit breakers, with individual control and status feedback of each controllable breaker.

The System Controller also includes load override, holiday scheduling, one-shot or event schedules, off warning to tenants by blinking lights, memory loss protection, power failure/brownout protection, hardware diagnostics, a real-time clock and 16 dry contact switch inputs.

The Pow-R-Command 750 panelboard is listed UL 67 for panelboards and UL 916 for energy management equipment.

23

System Configurations

Pow-R-Command 750

Designed for standalone applications, Eaton's PRC750 is a microprocessor-based lighting control system that can be used to control the lighting in your industrial facilities, high-rise office buildings and airports. A single PRC750 panel can be connected to a maximum of three expansion panels for the ability to control up to a total of 168 Smart Breakers. The PRC750 also includes load override, holiday scheduling, memory loss protection, astronomical time clocks and scheduling, 16 switch inputs, and alarm and message log features.

Breaker Control Busses (BCB)

Every Pow-R-Command Expansion Panelboard can be configured with the left and/or right breaker control busses installed. When using a PRC EP panel with one BCB, the remote controlled breakers are placed on the side with the control bus. Standard and controlled breakers can be distributed anywhere in the panel as needed.

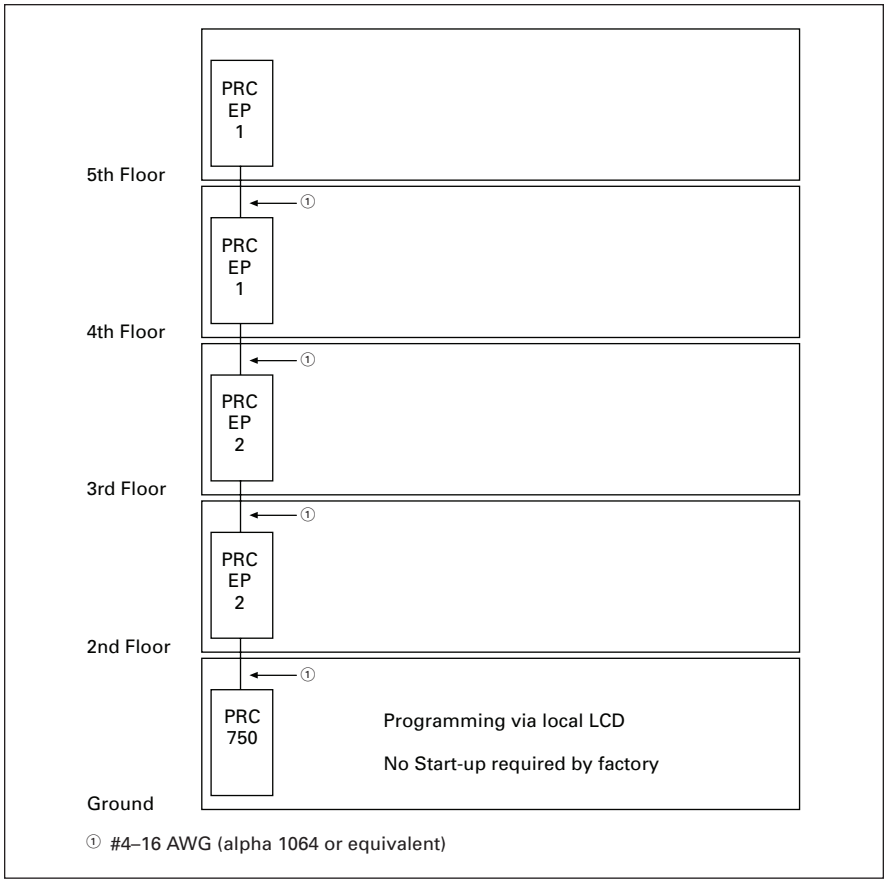

Figure 23.4-1. PRC750 Standalone System Architecture

Pow-R-Command 100

PRC100 Exterior View

General Description

Eaton's Pow-R-Command 100 is a microprocessor-based programmable lighting control system. The PRC100 can be used as a standalone panelboard or networked as a system.

Features

- LCD display and keypad
- Memory loss protection
- Power failure/brownout recovery
- Astronomical real-time clock
- Control software
- Time scheduling
- Holiday scheduling
- Input to output switch matrix
- Message/alarms
- Daylight optimization
- Switch Override Controller (SOC)
- Telephone Override Controller (TOC)

Components

- Intelligent power switching equipment
- Application Specific Controllers (ASCs)
- Software and support
- Integration components

Intelligent Power Switching Equipment

Pow-R-Command 100 panelboards are offered from 100 to 400A in main lug and main breaker configurations. Available voltages are 120/240, 208Y/120 and 480Y/277, single-phase and three-phase. The panelboard uses both branch-mounted standard breakers through 225A, and controllable thermal-magnetic breakers which are controlled by the Pow-R-Command 100 System Controller through an integral communications bus housed in the panelboard. This integral low voltage control bus connects to the System Controller and allows the individual control and status feedback of each controllable breaker.

The System Controller also includes load override, holiday scheduling, one-shot or event schedules, off warning to tenants by blinking lights, memory loss protection, power failure/brown-out protection, hardware diagnostics, a real-time clock and 12 dry contact switch inputs.

Equipment within the Pow-R-Command 100 system may be networked. Up to 120 panelboards may be networked over a shielded twisted pair network cable without the need for a personal computer in the system.

The Pow-R-Command 100 panelboard is listed UL 67 for panelboards and UL 916 for energy management equipment.

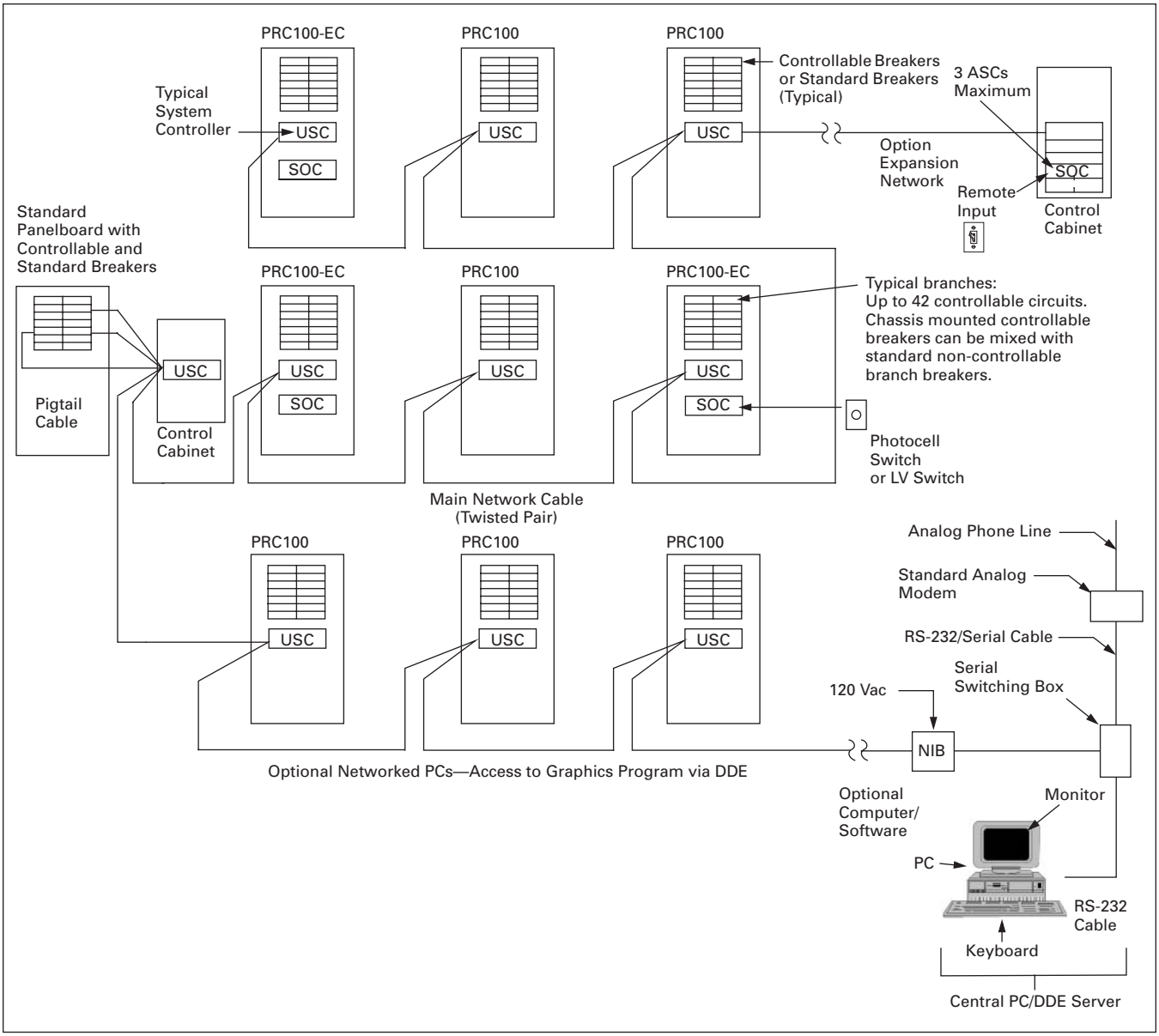

Figure 23.5-1. Typical Building Lighting Control System—Networked

Typical New Lighting Control System

Eaton's Pow-R-Command 100 panelboards shown above each have a System Controller for the basic lighting control functions.

The Pow-R-Command EC panelboards shown contain additional chassis space for a switch override controller.

As shown, the central personal computer (PC) is optional because each panelboard is a standalone operating lighting control system with basic lighting control functions. The PC may be used for programming changes; downloading software; scheduling, viewing system status and configuration, etc.

Legend

PRC100 = Standard Pow-R-Command 100 Panel

PRC100-EC = Pow-R-Command 100 with Expansion Chassis

USC = Universal System Controller Board

PC = Personal Computer

NIB = Network Interface Box

SOC = Switch Override Controller

Pow-R-Command 25

Pow-R-Command 25 Panelboard

General Description

Eaton's Pow-R-Command 25 is designed to replace lighting control systems involving multi-pole lighting contactors and relay panels. The Pow-R-Command 25 uses controllable circuit breakers in a panelboard that are grouped into zones and switched by a dry or control signal contact from an external source. **The controllable breakers are pre-wired at the factory in up to six customer-designated zones with up to 16 breakers per zone.**

Note: Refer to factory for zoning restrictions.

Components

- Intelligent power switching equipment
- Maintained-to-momentary board (MTM)

Intelligent Power Switching Equipment

Pow-R-Command 25 panelboards are offered from 100 to 400A in main lug and main breaker configurations. Available voltages are 120/240, 480Y/277 Vac and 208Y/120, single-phase and three-phase. The panelboard uses both branch-mounted standard breakers through 100A and controllable thermal-magnetic breakers that are controlled by the MTM.

The Pow-R-Command 25 panelboard provides the ability to group up to 42 remotely operated controllable breakers into six individual zones. Each zone is designed to be switched by a dry or control signal contact from an external device. Each Pow-R-Command 25 panelboard has an integral zoning board where the zone designations are pre-wired at the factory and linked to specific contact inputs. Limited changes may be made to zone designations in the field through wiring changes.

The Pow-R-Command 25 panelboard is listed UL 67 for panelboards and UL 916 for energy management equipment.

System Configurations

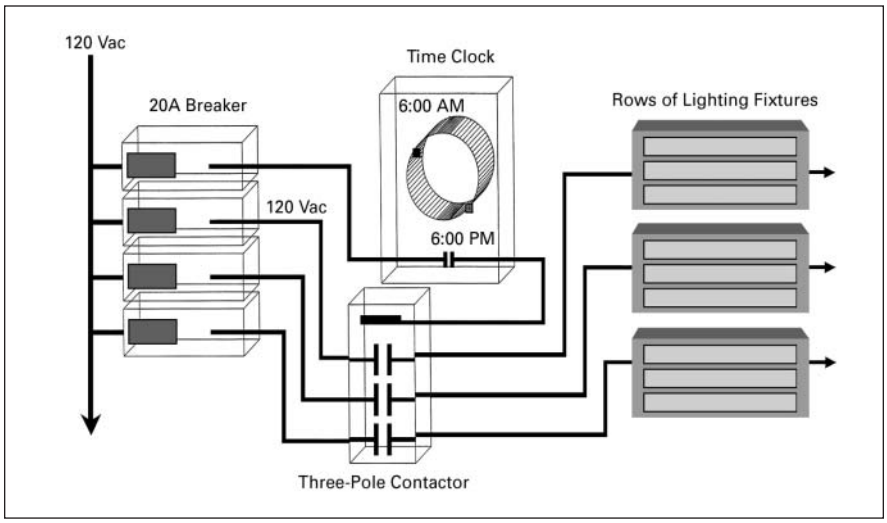

Figure 23.6-1. Typical Electrically Held Contactor Control System

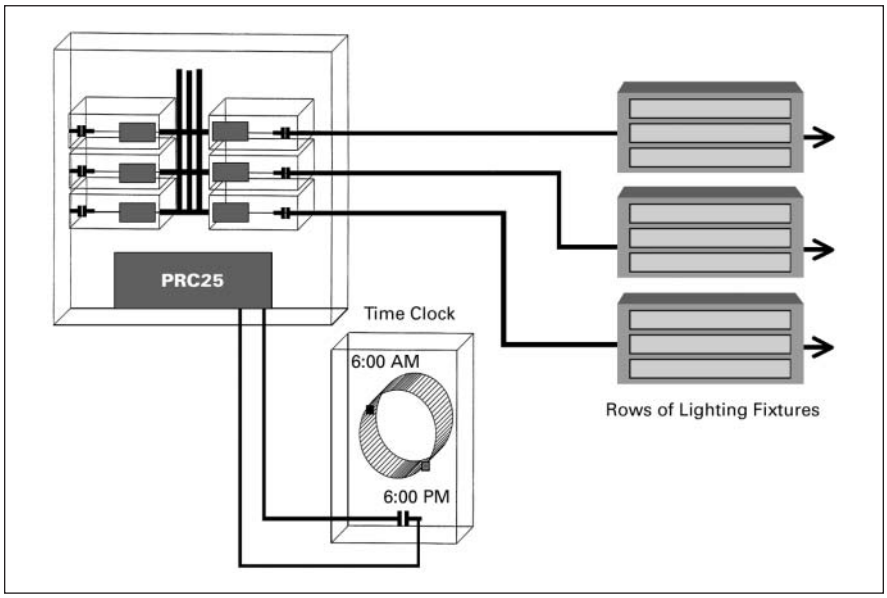

Figure 23.6-2. Typical Pow-R-Command 25 Panelboard System

23

Building Automation Systems (BAS)

Integration

The Pow-R-Command lighting control system can be integrated with Building Automation Systems via the following optional components:

- Native Modbus® Controller. The Native Modbus Controller takes the place of the PRC100 System Controller. The Native Modbus Controller is designed as a slave Modbus node
- JCI100 Controller. The JCI100 Controller is designed to take the place of the PRC100 System Controller. The JCI Controller is designed specifically for use in a Johnson Controls Metasys network. The JCI100 communicates using JCI's N2 protocol and is treated as an addressed slave node on an N2 bus
- OPC Server. The PRC OPC Server is a software addition onto a PRC100 or 1000 system. It is designed as an interface between the PRC system and an OPC server/client
- SOAP Server. The PRC SOAP Server is a PRC100 system network add-on. The PRC SOAP Server is designed as an interface between a PRC100 or 1000 system and a SOAP client
- BACnet Server. The PRC BACnet Server is a PRC system network add-on. The BACnet Server is designed to interface between the PRC100 or 1000 system and a BAS provider using the BACnet protocol
- PRC2000 Web-enabled BACnet Controller. The PRC2000 BACnet Controller provides direct interface via the Web to a BACnet BAS system

Refer to the factory for further information on applying these interfaces.

System Interface Equipment

Computer

The System Interface Equipment

- Provides Windows®-based programming and monitoring screens. The personal computer functions as the central point for data manipulation and programming of the system. It communicates with the system through a network interface device that is connected to the system through a twisted pair network
- The personal computer is not a required component of a PRC100 network but is a useful tool for centralized access and backup of system controllers
- An optional hand-held programmer provides the capability to communicate directly with the PRC100 system when maintenance of the panel is required. The hand-held programmer connects directly to the PRC100 controllers RS-485 board maintenance port using the supplied cable

Lighting Management Software

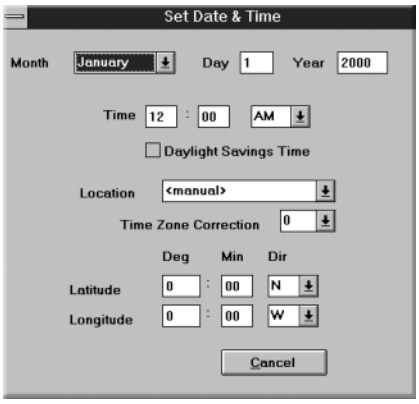

Software

The Lighting Management Software

- Provides programming for the following equipment:
  - ❑ Power switching equipment
  - ❑ Application-specific controllers
- The Lighting Management Software provides fully interactive easy-to-use software screens for the following functions:
  - ❑ System Setup
  - ❑ System Management
  - ❑ Controller Access and Modification
  - ❑ Data Logging and Backup
  - ❑ Remote Monitoring
- The programming screens provide access to all the capabilities that exist in the power switching and application-specific controllers
- Additional software components can be purchased that will allow for the creation and use of custom graphic screens and/or Web access to a PRC100 system
- Network components provide flexibility in establishing a PRC100 network. The network can consist of either a pure twisted shielded network or a combination of a twisted shielded network and Ethernet. Ethernet networks are accomplished using the PRC100 Ethernet Server
- To connect to a PRC100 network via a PC, modem or remote LAN/WAN connection, a Network Access Device is required. There are two types of Network Access Devices offered. The first is a Network Interface Box, which allows connection via an RS-232 port. The second is an Ethernet Server, which is used for connection via Ethernet

Further Information **CAT.73.01.T.E**