Unitized Power Centers

Contents

Unitized Power Centers
General Description and Application 15.0-2
Ratings 15.0-2
Advantages 15.0-2
Third-Party Listing 15.0-3
Seismic Qualification 15.0-3
Technical Data 15.0-4
Layout—Dimensions 15.0-5

Specifications

See Eaton's *Product Specification Guide*, available on CD or on the Web.

CSI Format:	1995	2010
	Section 16313	**Section 26 11 16.13**

Unitized Power Center

Unitized Power Centers

Unitized Power Center

General Description and Application

Eaton's unitized dry-type power centers are self-contained metal-enclosed unit substations especially designed to supply and distribute low voltage power from medium voltage lines in modern commercial and industrial systems. They are ideal where considerations of equipment size, accessibility, maintainability, ease of installation, and overall economy are uppermost.

Due to the inherent compactness of unitized power centers, they are easily and conveniently applied in multiples throughout a distribution system at physical locations close to centers of load concentration. The distribution voltage is thus stepped down to the utilization voltage only at or near the areas of demand with kVA being allocated as required for new construction or renovation in existing buildings. The application of unitized power centers in this manner results in several advantages not available with conventional secondary unit substations.

Ratings

- Three-phase kVA:
  - 112.5–1000
- Primary voltages:
  - 2.4 kV Class with 20 kV BIL, 60 Hz
  - 5 kV Class with 30 kV BIL, 60 Hz
  - 15 kV Class with 60 kV BIL, 60 Hz
  - MV power system grounding—solid or low resistance grounded (≥100A) only. UPC product is not to be used on high-resistance or ungrounded MV power systems
- Transformer windings:
  - Primary connections—three-wire delta only
  - Copper or aluminum
  - Type AA, ventilated dry-type
  - NEMA® Class 220°C insulation
  - 80, 115, 150°C rise. When transformer must meet requirements of Federal 10CFR-431K, the 750 and 1000 kVA units are only available in 150°C rise
  - Type FA (forced air) available, increases kVA ratings by 33%
  - Primary taps at 95%, 97.5%, 100%, 102.5%, 105% of rated primary voltage
- Secondary voltages:
  - 208Y/120V, four-wire
  - 240V, three-wire
  - 480Y/277V, four-wire
  - 480V, three-wire
  - 575/380V, four-wire
- Transformer efficiency per 10CFR431K

Advantages

- Moving into place is facilitated by the rugged channel base construction and lifting eyes included with each assembly
- All standard unitized power centers are especially designed to minimum dimensions consistent with safety and reliability
- Standard unitized power centers are front-only accessible, making against-the-wall installations possible—minimum of 6.00 inches (152.4 mm) from wall for seismic applications, 2.00 inches (50.8 mm) for non-seismic
- Future load growth is easily accommodated by the addition of unitized power centers to the system without affecting the units serving the original load areas
- Losses in the medium voltage portion of the distribution system are lower, resulting in a continuous operating savings
- Secondary output voltage may be adjusted at each unitized power center to compensate for unusual load conditions without affecting the voltage setting of other apparatus in the system
- Trouble is more quickly isolated with individual units located at or near their served loads
- Primary power is purchased from the utility at the lower primary power rates, resulting in operational cost savings throughout the life of the equipment
- Overall installed cost is lower because of the cost benefits of medium voltage distribution cable as compared to low voltage cable or busway
- IQ Energy Sentinel™ devices can be provided on each feeder circuit to interface with an Eaton PowerNet™ system to monitor and display electrical energy (kWH). See **Tab 3** for more information
- The IQ family of electronic meters can be provided to monitor the parameters unique to each type of device. With a PONI accessory, each of these devices can be connected to an Eaton PowerNet power monitoring system. See **Tab 2** for more information

Advantages (continued)

Third-Party Listing

The UPC is UL listed.

Seismic Qualification

Refer to **Tab 1** for information on seismic qualification for this and other Eaton products.

Technical Data

Table 15.0-1. Primary Disconnect Switch Ratings—Type MVS Load Interrupter ①

Rated Maximum Voltage kV rms	Impulse Withstand Voltage kV peak	Continuous and Load Break Current Ampere	Short-Time Short-Circuit Withstand Current (2 second) kA, rms sym	Non-Fused Switch Fault Close and Momentary Rating (10 cycles) kA, rms Asym	Fused Switch Fault Close Rating kA, rms Asym
4.76	60	600	25	40	101
4.76	60	600	38	61	101
15	95	600	25	40	101
15	95	600	38	61	101

① UL listing available with fused switch only.

Table 15.0-2. Primary Fuse Ampere Rating Current Limiting Eaton Type HCL, 63,000A Symmetrical Interrupting Rating

kVA	Primary Fuse Ampere Rating at, kV						
	2.4	4.16	4.8	7.2	12.0	13.2	13.8
112.5	45	25	18	15	7	7	7
150	50	35	25	18	10	10	10
225	75	45	40	25	15	15	15
300	100	60	50	35	20	20	18
500	200	100	80	60	40	30	30
750	—	150	120	85	60	45	45
1000	—	200	175	125	75	60	60

Table 15.0-3. Unit Weights—Lbs (kg)

kVA	Weight in Lbs (kg)
112.5 ②	4097 (1858)
150 ②	4317 (1958)
225 ②	4744 (2152)
300 ②	5247 (2380)
500 ②	5659 (2567)
750 ②	6721 (3049)
1000 ③	10834 (4924)

② Single primary, LV distribution in front of the transformer.

③ Single primary. Separate LV switchboard close coupled to transformer.

Table 15.0-4. Unitized Power Center, Circuit Breaker Interrupting Ratings

Breaker Type	Range of Rated Continuous Current, Amperes	Rated Maximum Interrupting Capability, kA Sym.	
		240V	480V
EDB	100–225	22	—
EDS	100–225	42	—
ED	100–225	65	—
EDH	100–225	100	—
EDC	70–225	200	—
EHD	15–100	18	14
FDB	15–150	18	14
FD	15–225	65	35
HFD	15–225	100	65
FDC	15–225	200	100
JD	70–250	65	35
HJD	70–250	100	65
JDC	70–250	200	100
DK	250–400	65	—
KD	100–400	65	35
HKD	100–400	100	65
KDC	100–400	200	100
LGE	250–600	65	35
LGH	250–600	100	65
LD	300–600	65	35
HLD	300–600	100	65
LDC	300–600	200	100
MDL	400–800	65	50
HMDL	400–800	100	65
ND	600–1200	65	50
HND	600–1200	100	65
NDC	600–1200	200	100
RD ④	800–2500	125	65
RDC ④	800–2500	200	100

④ Not panel mounted, supplied only in added auxiliary distribution section.

Table 15.0-5. Ventilated Dry-Type Transformer Standard Ratings ①

kVA	Impedance %	kV Class	Δ Primary Volts	LIWV (BIL)	Primary Taps	Wye Secondary Volts	Self-Cooled Secondary Full Load Amperes		Fan Cooled (Optional) kVA	Fan Cooled (Optional) Secondary Full Load Amperes		Transformer Maximum Short-Circuit Amperes rms Symmetrical ②	
							208V	480V		208V	480V	208V	480V
112.5	4.5	5	2400,	20 kV,	±2–2-1/2%	208Y/120	312	135	150	416	180	11566	5012
150	4.5		4160	30 kV,		or	416	180	200	555	241	11896	5155
225	4.5		or	or		480Y/277	625	271	300	833	361	14194	6151
300	4.5		4800	30 kV			833	361	400	1110	481	15840	6561
500	4.5						1389	601	667	1200 ③	802	24136	10459
750	5.5						2082	902	1000	2776	1203	36205	15689
1000	5.5						2776	1203	1333	3000 ④	1604	48274	20918
112.5	4.5	15	7200,	30 kV,	±2–2-1/2%	208Y/120	312	135	150	416	180	6245	2706
150	4.5		12470	60 kV,		or	416	180	200	555	241	8327	3608
225	4.5		13200	60 kV		480Y/277	625	271	300	833	361	12491	5413
300	4.5		or	or			833	361	400	1110	481	15140	6561
500	4.5		13800	60 kV			1389	601	667	1200 ③	802	24136	10459
750	5.5						2082	902	1000	2776	1203	36205	15689
1000	5.5						2776	1203	1333	3000 ④	1604	48274	20918

① Refer to **Table 15.0-6** for available temperature rise, fan and secondary voltage options.
② Short circuit currents assume unlimited utility source, and do not include motor contributions.
③ Maximum load/output is limited to 1200A due to chassis limitation.
④ Maximum load/output is limited to 3000A (cross bus limitation).
Note: All units are three-phase, 60 Hz, 150°C rise, 220°C insulation system.

Unitized Power Centers—Available Configurations

- MV switch will be fused or non-fused. UL listing available with fused switch only
- MV fuse class: current limiting, Eaton Type HCL only
- Primary surge protection shown is optional. Surge arresters, snubber pack or both can be provided
- Use separate LV switchboard if:
  - LV distribution chassis required is >1200A
  - LV chassis-mounted devices will consume more than 36X of available chassis space
- Bottom or top entry incoming high voltage cable size and quantity is limited to 250 kcmil, two per phase
- Vent screens, filters, door gaskets or space heaters are not available in this product
- FA rating (33% increase in kVA) is optional
- Available transformer options—see **Table 15.0-6**

Table 15.0-6. Available Transformer Options ①

Transformer Section 48-Inch Wide With LV Distribution in Front				Transformer Section 48-Inch Wide With Separate LV Distribution			
Trans. kVA	Temp. Rise °C	Optional Fan ②	Secondary Voltage	Trans. kVA	Temp. Rise °C	Optional Fan ②	Secondary Voltage
112.5	80, 115, 150	Yes	All	112.5	80, 115, 150	Yes	All
150	80, 115, 150	Yes	All	150	80, 115, 150	Yes	All
225	80, 115, 150	Yes	All	225	80, 115, 150	Yes	All
300	80, 115, 150	Yes	All	300	80, 115, 150	Yes	All

Transformer Section 60-Inch Wide With LV Distribution in Front				Transformer Section 60-Inch Wide With Separate LV Distribution			
Trans. kVA	Temp. Rise °C	Optional Fan ②	Secondary Voltage	Trans. kVA	Temp. Rise °C	Optional Fan ④	Secondary Voltage
500	150	Yes	All ③	500	80, 115	Yes	All
500	80, 115	Yes	480V, 600V	750	150	Yes	All
500	150	Yes	All	1000	150	Yes	All
750	150	Yes	480V, 600V	—	—	—	—

① Available secondary voltages: 208/120V wye (four-wire), 240V delta (three-wire), 480/277V wye (four-wire), 480V delta (three-wire) and 575/380V wye (four-wire).
② 33% increased kVA capacity with fans.
③ At 208 or 240V secondary, maximum load (output) is limited to 1200A due to chassis limitation.
④ 33% increased kVA capacity with fans, except for 1000 kVA transformer using 208V secondary, maximum load/output is limited to 3000A (cross bus limitation).

Available Configurations

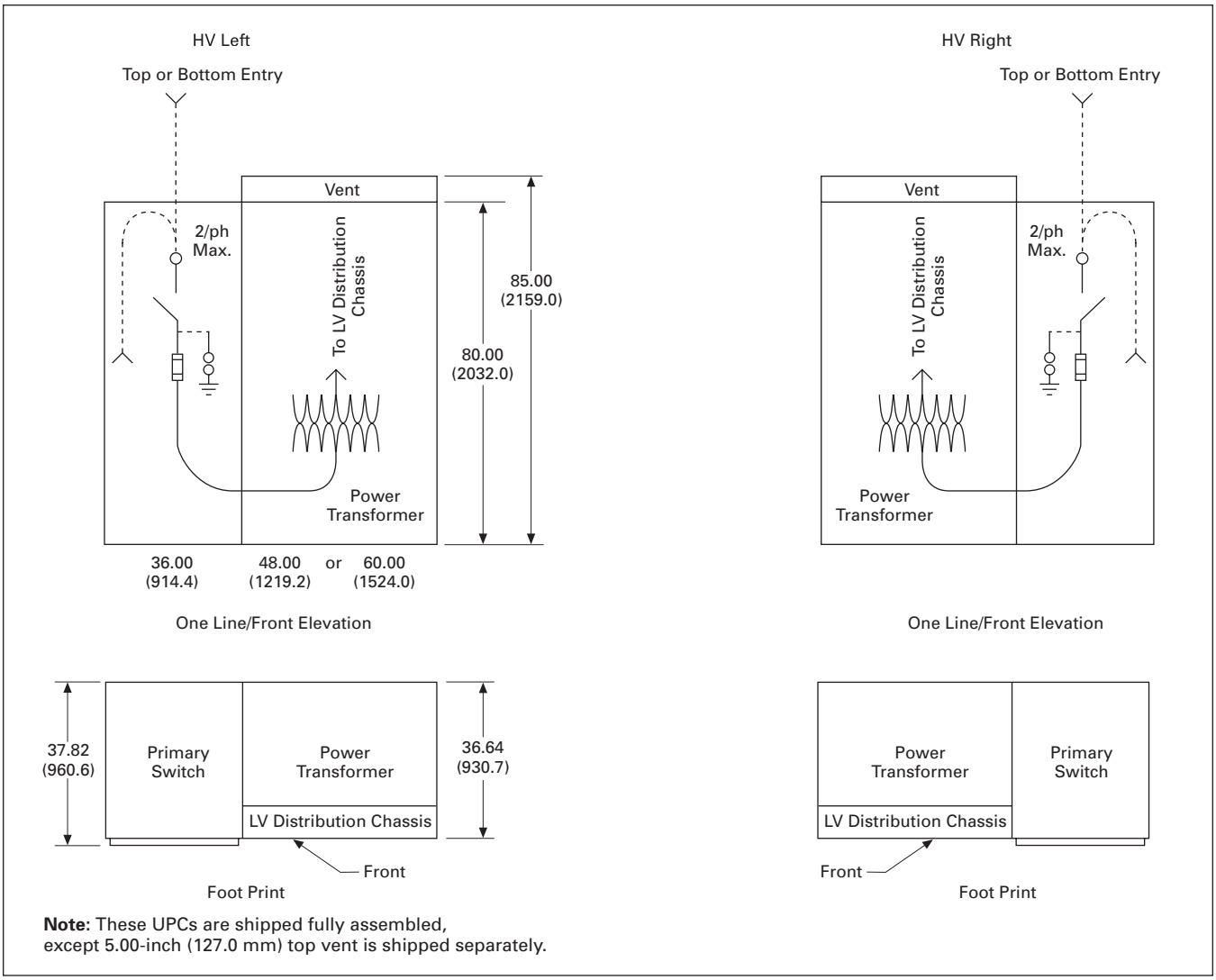

Note: These UPCs are shipped fully assembled, except 5.00-inch (127.0 mm) top vent is shipped separately.

Figure 15.0-1. Single Primary, LV Distribution in Front of the Transformer

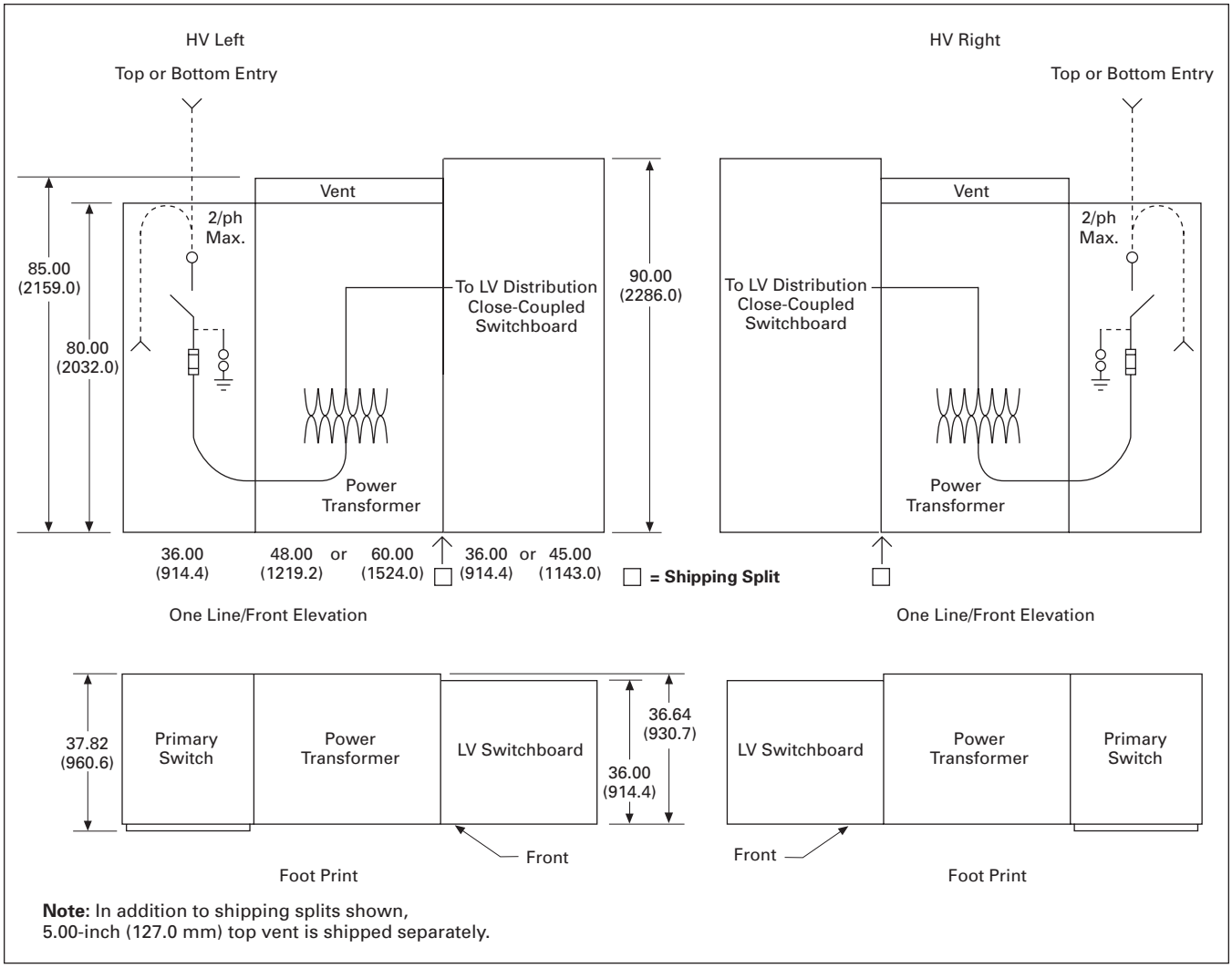

Figure 15.0-2. Single Primary, Separate LV Distribution Switchboard Close-Coupled to Transformer

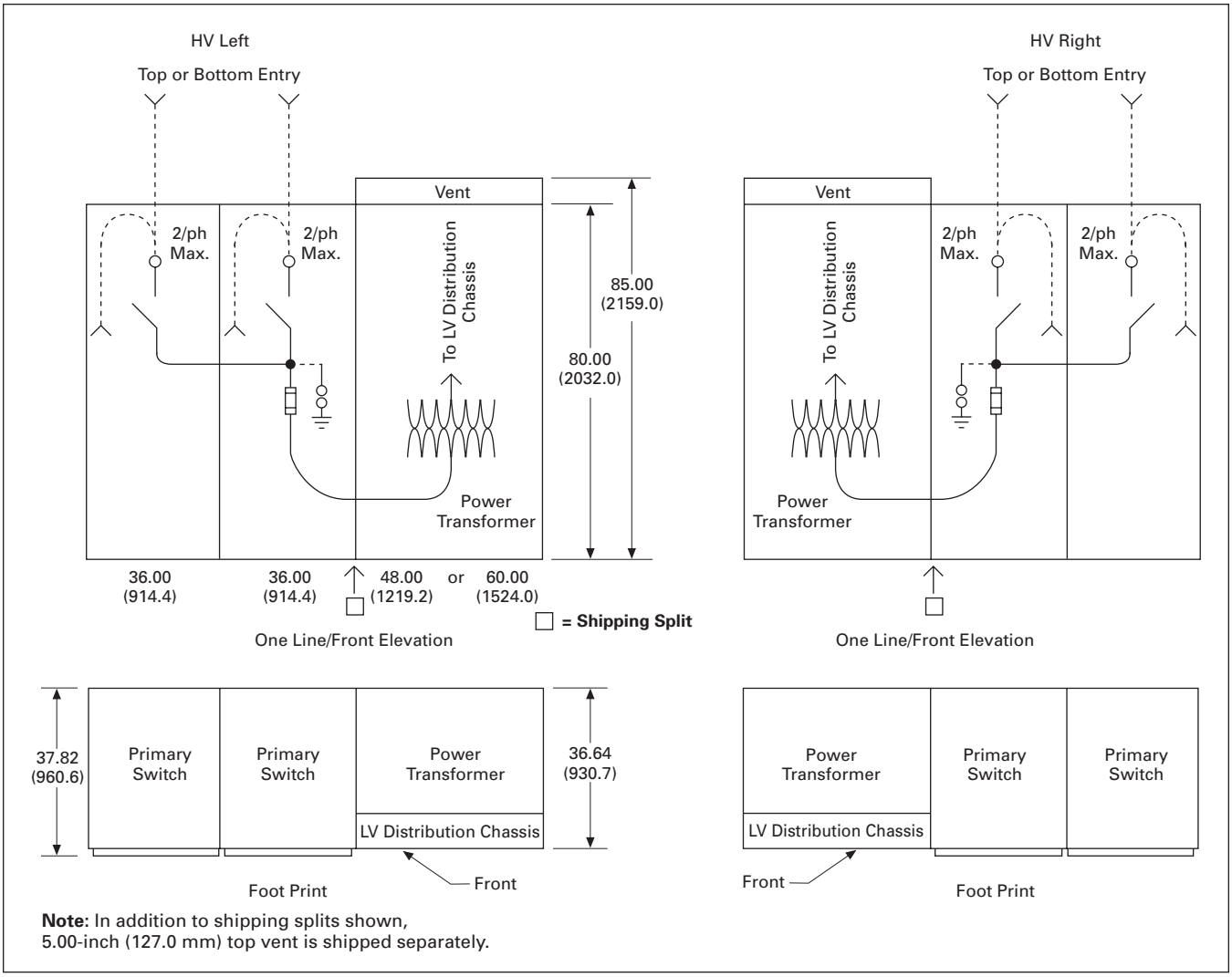

Note: In addition to shipping splits shown, 5.00-inch (127.0 mm) top vent is shipped separately.

Figure 15.0-3. Duplex Primary, LV Distribution in Front of the Transformer

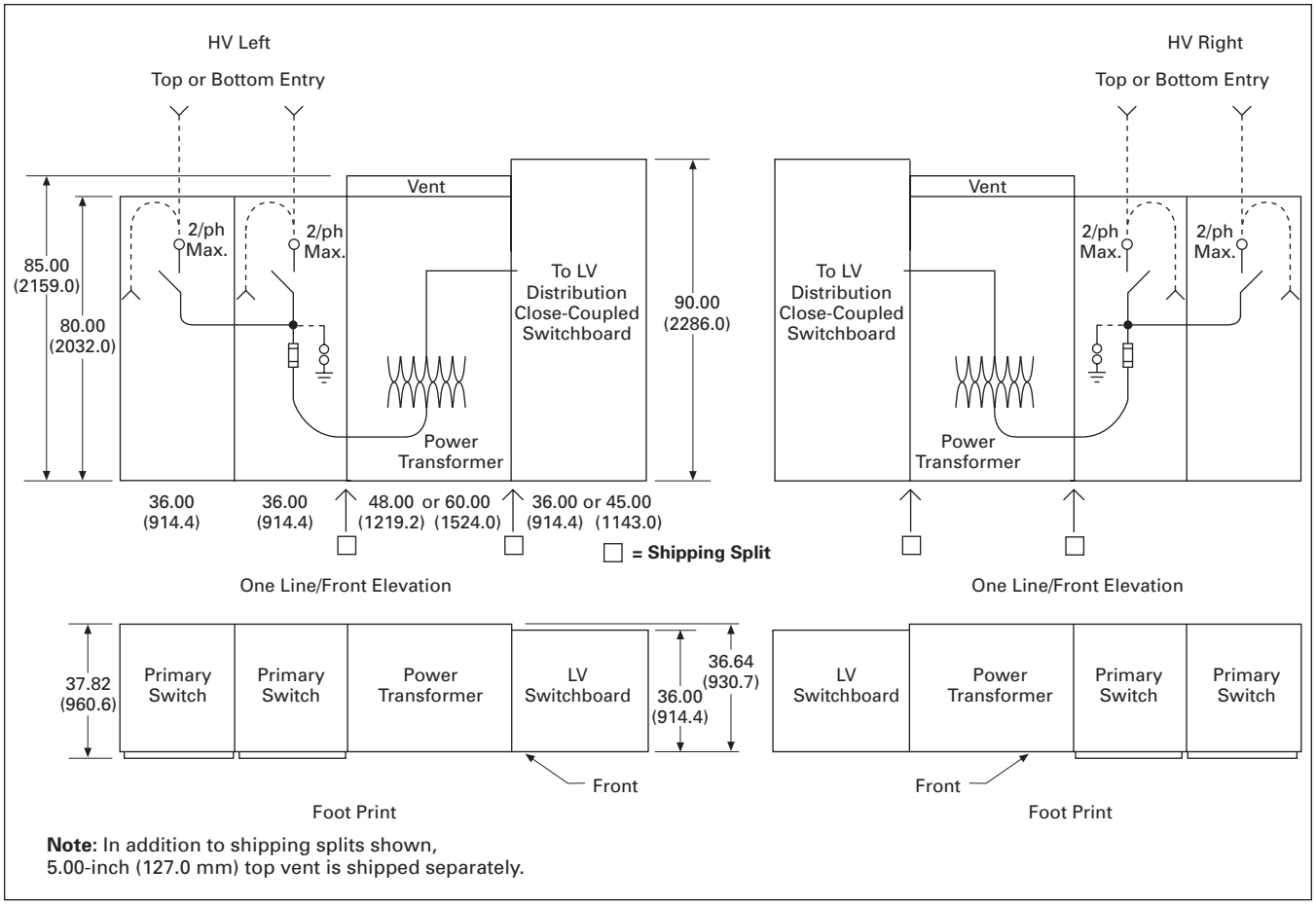

Figure 15.0-4. Duplex Primary, Separate LV Distribution Switchboard Close-Coupled to Transformer

Secondary Distribution Panelboard Maximum Panel Height—"X" Unit

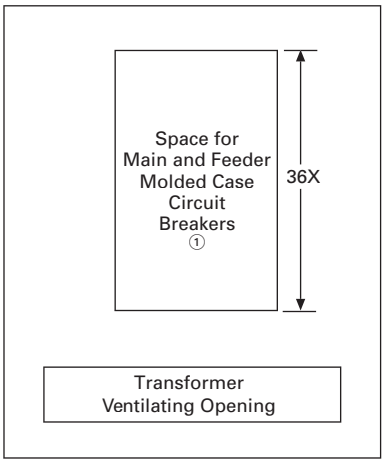

Molded Case Circuit Breaker—Layout ①
See Table 15.0-2 for Ampere Ratings

2X	2-Pole	ED, EDH, EDC, EHD, FD, FDB, FDC, HFD ②	2-Pole	ED, EDH, EDC, EHD, FD, FDB, FDC, HFD ②
3X	3-Pole	ED, EDH, FD, FDB, FDC, HFD, JD, JDB, HJD, JDC ②	3-Pole	ED, EDH, FD, FDB, FDC, HFD, JD, JDB, HJD, JDC ②
4X	2- or 3-Pole	DK, KD, KDB, HKD, KDC		
6X	2- or 3-Pole	LD, LDB, HLD, LDC, MDL, LG HMDL, ND, HND, NDC		

Figure 15.0-5. Distribution Panel Layout Mounted in Front of Transformer up to 1200A Panel-Mounted Main and Feeder Devices

① 100% rated main and feeder electronic trip breakers are available rated 400–1200A. 90°C wire rated at 75°C ampacity must be used.
② May be used as a main device.

Note: For main devices or main bus 1200A and below. Feeder devices mounted in front of transformer.
Note: For auxiliary switchboard section layout—adjacent to transformer, refer to **Figure 15.0-7** for switchboard section information.
Note: Neutral conductor is always gutter mounted.

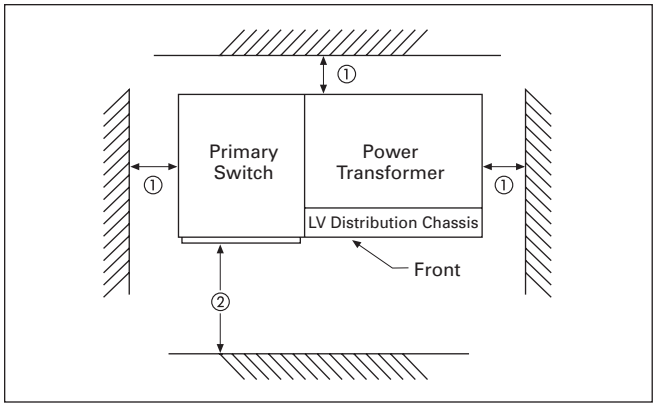

Figure 15.0-6. Base Plan View—HV Left, LV Distribution in Front of the Transformer

① Minimum recommended clearance on each side and rear = 2.00 inches (51.0 mm) for non-seismic applications, 6.00 inches (152.4 mm) for seismic applications. Local jurisdictions may require more.

② Minimum recommended clearance in the front = 36.00 inches (863.6 mm). Local jurisdictions may require more.

Note: Finished foundation surface shall be level within 0.06 inches (1.5 mm) in 36.00 inches (914.4 mm) left-to-right, front-to-back and diagonally, as measured by a laser level. Refer to actual order drawings for power cable conduit entrance locations.

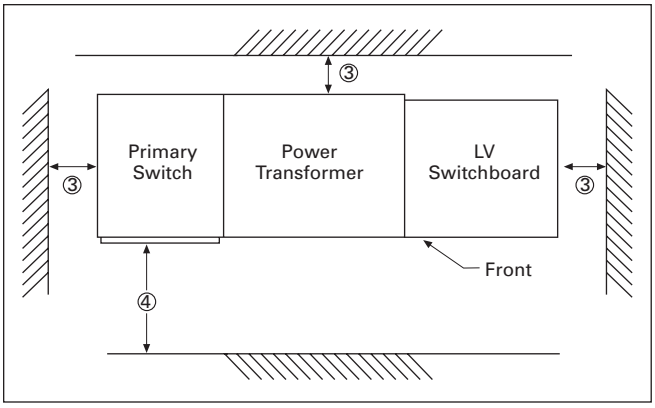

Figure 15.0-7. Base Plan View—HV Left, LV Switchboard Close-coupled to Transformer on the Right

③ Minimum recommended clearance on each side and rear = 2.00 inches (51.0 mm) for non-seismic applications, 6.00 inches (152.4 mm) for seismic applications. Local jurisdictions may require more.

④ Minimum recommended clearance in the front = 36.00 inches (863.6 mm). Local jurisdictions may require more.

Note: Finished foundation surface shall be level within 0.06 inches (1.5 mm) in 36.00 inches (914.4 mm) left-to-right, front-to-back and diagonally, as measured by a laser level. Refer to actual order drawings for power cable conduit entrance locations.

This page intentionally left blank.