Resistance Grounding Systems

Contents

Resistance Grounding Systems

High Resistance Grounding System—Medium Voltage **36.1-1**

High Resistance Grounding System—Low Voltage **36.2-1**

Specifications

See Eaton's *Product Specification Guide*, available on CD or on the Web.

CSI Format:	1995	2010
High Resistance Grounding System—MV	**Section 16451A**	**Section 26 05 26.11**
High Resistance Grounding System—LV	**Section 16451B**	**Section 26 05 26.13**

C-HRG Free-Standing NEMA 1 Enclosure

This page intentionally left blank.

Medium Voltage High Resistance Grounding System

C-HRG Free-Standing NEMA® 1 Unit

General Description

Where continuity of service is a high priority, high resistance grounding can add the safety of a grounded system while minimizing the risk of service interruptions due to grounds. The concept is a simple one: provide a path for ground current via a grounding transformer (with adjustable resistance across its secondary) that limits the current magnitude and a monitor to determine when an abnormal condition exists.

The ground current path is provided at the point where the service begins, by placing a predominantly resistive impedance in the connection from system neutral to ground. Control equipment continuously measures ground current; a relay detects when the current exceeds a predetermined level. An alarm alerts building personnel that a ground exists. The system has built-in fault tracing means to assist in finding the source of the ground. A 120 Vac supply (remote) is required for control power for the system.

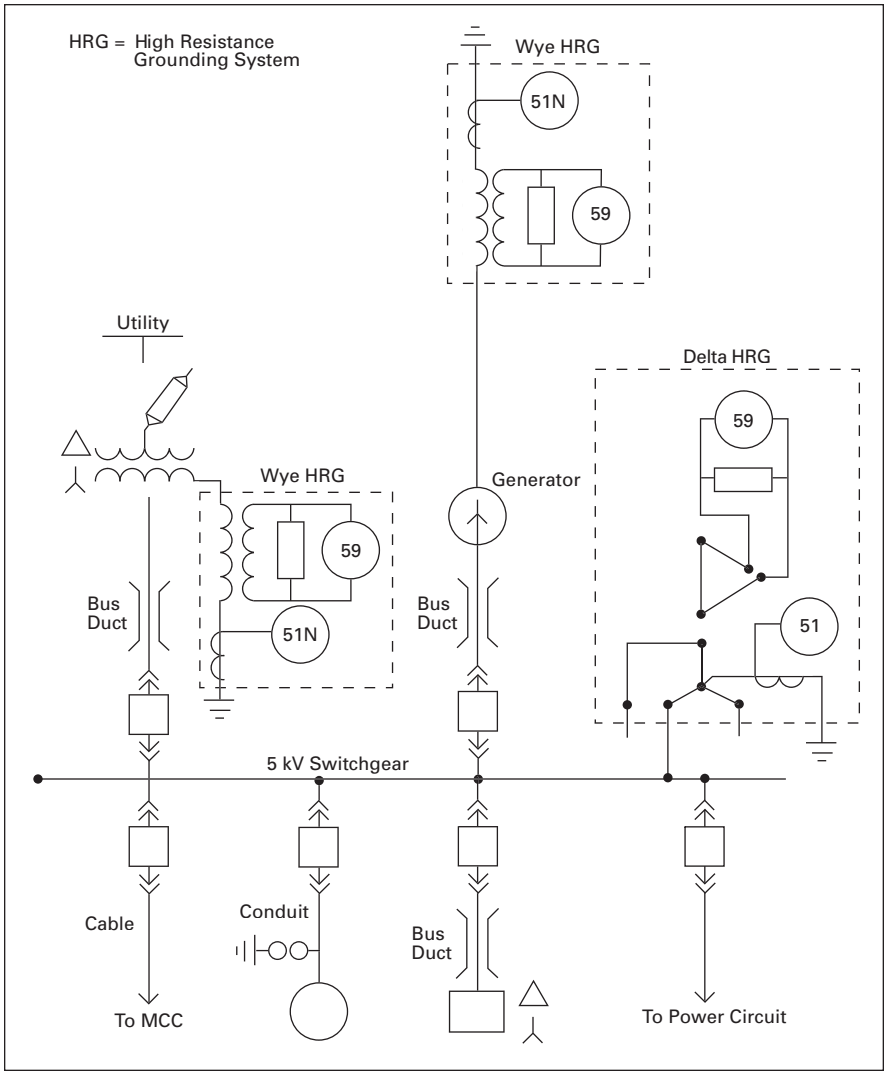

Figure 36.1-1. HRG—High Resistance Grounding System

Seismic Qualification

Refer to **Tab 1** for information on seismic qualification for this and other Eaton products.

Application Issues

This member of Eaton's medium voltage metal-clad switchgear family has actually been around for many years. However, it is now offered as a stand-alone unit that can be added to existing installations. The C-HRG is used to protect an electrical distribution system from damaging transient overvoltages caused by ground faults. It also provides a means to locate the ground fault, therefore extending the life of the distribution system.

Ratings and Configurations

The C-HRG MV is offered at the 5 kV class rating. It can be applied to delta or wye ungrouped three-wire distribution systems. Standard dimensions are 36.00-inch (914.4 mm) W x 40.00-inch (1016.0 mm) D x 92.00-inch (2336.8 mm) H.

4200V (Maximum) Delta Systems

To add high resistance grounding to an ungrounded delta-connected system, a neutral point must be created. Three single-phase transformers can be interconnected in a wye-broken delta configuration to provide such a neutral point. The transformers and grounding resistors are chosen to limit the ground current to a maximum value of 6A.

Application Note: The neutral point may not be used to serve phase-to-neutral loads. Also, this technique may be applied on wye-connected sources when the neutral point is not conveniently accessible from the service entrance location. One delta high resistance grounding would ground the 5 kV system.

4200V (Maximum) Wye Systems

To add high resistance grounding to a wye-connected system, resistors are placed across the secondary of a grounding transformer whose primary is placed in series with the neutral-to-ground connection of the power source. The resistors are chosen to limit the current to a maximum value of 6A.

Application Note: Per 1999 NEC® 250.36(4), line-to-neutral loads may not be connected to a system that the neutral is resistance-grounded. Also, if the system has two switchable sources not permanently connected to the bus, two wye-type grounding systems are required as shown in **Figure 36.1-1**.

Ground Current Detection

Any time a system is energized, a small ground current called the "capacitive charging current" will be observed. For medium voltage (4200V and below) systems, this naturally occurring current is typically 3A or less.

When one phase becomes grounded, additional current above the charging level will flow. As all ground current must flow through the grounding resistor/grounding transformer assembly, an ammeter in this circuit will read the total amount of ground current. By placing a current-sensing relay in series with the ammeter, the current relay can be adjusted to pick-up at a level in excess of the capacitive charging current, thus indicating the abnormal condition.

Alternatively, an optional voltmeter-relay can be connected across the grounding resistors. The voltage across the resistors is proportional to the amount of ground current. The voltmeter-relay's pickup adjustment is set above the capacitive charging current, to the desired detection level.

In both current and voltage detection methods, the ground current ammeter provides a direct reading of the total actual ground current present in the system at that time. It will be helpful to periodically note the ammeter's reading: a trend toward higher values may indicate the need for equipment maintenance, and hence reduce the occurrence of unplanned shutdowns.

Indication and Alarm Circuits

When a fault is detected, an adjustable time delay is provided to override transients. When the time delay has been exceeded, the green "normal" light will turn off, the red "ground fault" light will turn on, and the ground alarm contacts will transfer. If equipped with the optional alarm horn, it will sound.

The grounding transformer secondary breaker must be closed for the system to be operational. Should this breaker be opened at any time, the system will signal a ground fault condition as a fail-safe feature. The breaker must be closed to clear the alarm signal.

When the fault is cleared, the current/voltage relay will reset. If the reset control is set on "auto," the lights will return to "normal" on, "ground fault" off, and the ground alarm contacts will re-transfer. If the reset control is set on "manual," the lights and relay contacts will remain latched until the operator turns the reset control to "reset." The lights and ground alarm contacts will then return to normal. The system can be reset only if the fault has been cleared.

During a fault, the optional alarm horn can be silenced at any time by using the "alarm silence" pushbutton. It will not re-sound until either the system is reset, or the re-alarm timer expires. The re-alarm timer is activated by the "alarm silence" control. If the horn has been silenced but the fault has not been cleared, the timer will run. It has a range of 2–48 hours. When the timer times out, the horn will re-sound, alerting maintenance personnel that the fault has not been cleared.

Test Circuit

A test circuit is provided to allow the user to quickly determine that the system is working properly. The test circuit will operate only under normal conditions—it will not allow testing if the system is sensing a fault. The test operation does not simulate an actual system ground fault. It does, however, test the complete controls of the fault indication and pulsing circuitry. The system then reacts as it would under actual system ground conditions—lights transfer, alarm contacts transfer and the (optional) horn sounds.

Pulser Circuit

The pulser circuit offers a convenient means to locate the faulted feeder and trace the fault to its origin. The pulser is available any time a fault has been detected. The pulse intervals are controlled by an adjustable recycle timer. The "pulse" light flashes on and off, corresponding to the on-off cycles of the pulser contactor. The pulser contactor switches a bank of resistors on and off, thus allowing a momentary increase in the ground current (approximately a 4A current pulse above the ground current).

Locating a Ground Fault

The current pulses can be noted with a clamp-on ammeter when the ammeter is placed around the cables or conduit feeding the fault. The operator tests each conduit or set of cables until the pulsing current is noted. By moving the ammeter along the conduit, or checking the conduit periodically along its length, the fault can be traced to its origin. The fault may be located at the point where the pulsing current drops off or stops.

If little or no change in the pulsing current is noted along the entire length of a conduit, then the fault may be in the connected load. If the load is a medium voltage distribution equipment or motor control center, repeat the process of checking all outgoing cable groups and conduits to find the faulted feeder. If the fault is not found in an outgoing feeder, the fault may be internal to that equipment.

Application Note: It may not be possible to precisely locate faults within a conduit. The ground current may divide into many components, depending on the number of cables per phase, number of conduits per feeder, and the number and resistance of each ground point along the conduits. The resulting currents may be too small to allow detection or may take a path that the ammeter cannot trace. An important note to keep in mind is that while the pulser can greatly aid in locating a fault, there may be certain conditions under which the pulses cannot be readily traced, and other test procedures (megohm, high-potential, etc.) may be needed.

Sequence of Operations

Normal

- Green "normal" light on
- Red "ground fault" light off
- White "pulse" light off
- System control switch in "normal" position
- Reset control switch in either "auto" or "manual"

Test

Turn and hold the system control switch in the "test" position. This mode will test the control circuitry only. It will bypass the sensing circuit and cause the green "normal" light to turn off and the red "ground fault" light to turn on. The pulser will be activated as well. The white "pulse" light will turn on and off as the pulser contactor closes and opens. However, the ground current ammeter will not display the total ground current, including the incremental pulse current. When ready, return the system control switch to "normal." The pulser will stop. If the reset control is in the "manual" position, turn it to "reset" to reset the fault sensing circuit. The red "ground fault" light will turn off, and the green "normal" light will turn on. Test mode is not available if the system is detecting a ground. The sensing circuit will disable the test circuit.

Ground Fault

When the sensing circuit detects a fault, the green "normal" light will turn off and the red "ground fault" light will turn on. The ground current ammeter will indicate the total ground current. To use the pulser, turn the system control switch to "pulse." The pulser contactor will cycle on and off as controlled by the recycle timer relay. Use the clamp-on ammeter to locate the faulted feeder. Open the feeder and clear the fault. If the reset control switch is in the "manual" position, turn it to "reset" to reset the sensing circuit. (If reset control is in "auto," it will reset itself.) When ready to restore service to the load, close the feeder. Return the system control to "normal."

Application

When a ground fault occurs on an ungrounded system, high transient voltages can occur, which may cause more frequent equipment failures than if the equipment were grounded. These transient overvoltages, as high as four times the normal voltage, reduce the life of the system's insulation resulting in:

- Motor failure
- Transformer failure
- Coil failure
- Electronic equipment failure
- Cable insulation failure

By using a high resistance grounding system, many facilities can gain the benefit of a grounded system without impairing the continuity of service to their equipment. The concept behind high resistance grounding is to provide a path for the ground current to flow while limiting its magnitude by using a resistor. The ground current path is provided at the point where service begins. Control equipment continuously monitors the magnitude of the ground current. When the ground current exceeds a predetermined level, the built-in alarm relay alerts building personnel that a ground fault exists. In addition, the C-HRG MV "Safe Ground" system has a built-in fault pulsing as a means to assist in finding the source of the ground fault without interrupting service.

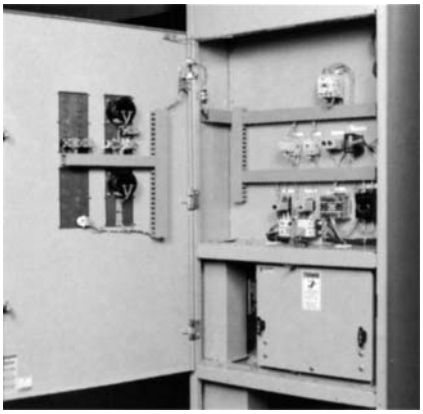

C-HRG Unit Shown with the Door Open

Product Features

- Tapped resistors (limits primary current to 3–6A)
- Current sensing ground fault detection (2–10A pickup/0.5–20 second delay)
- Ground current transformer (10/10 ratio)
- Control circuit pull fuseblock
- Ground current ammeter (0–10A, 1% accuracy)
- Indicating lights:
  - Red (ground fault)
  - Green (normal)
  - White (pulse)
- Adjustable pulsing timer (0–10 seconds)
- 3-position selector switch (normal, pulse, test)
- Control switch for manual or automatic reset
- Ground fault contacts (1NO/1NC)
- Shorting terminal block for ground current CT
- UL® label
- Wiremarkers

The system is completely assembled, wired and tested at the factory in accordance with NEMA and UL requirements. A certified production test report is shipped with the unit.

Technical Data—Circuit Diagrams

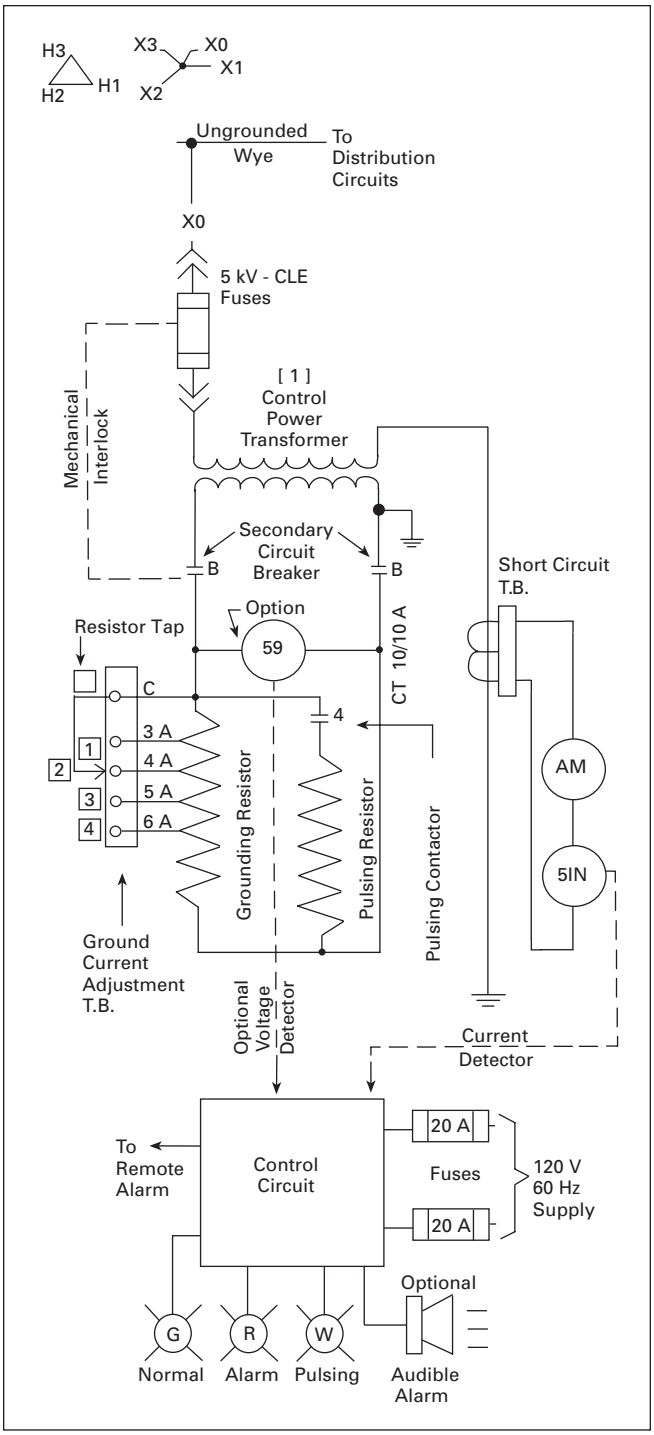

Figure 36.1-2. Ungrounded Wye System (With Standard Current and Optional Voltage Relay Fault Detectors)

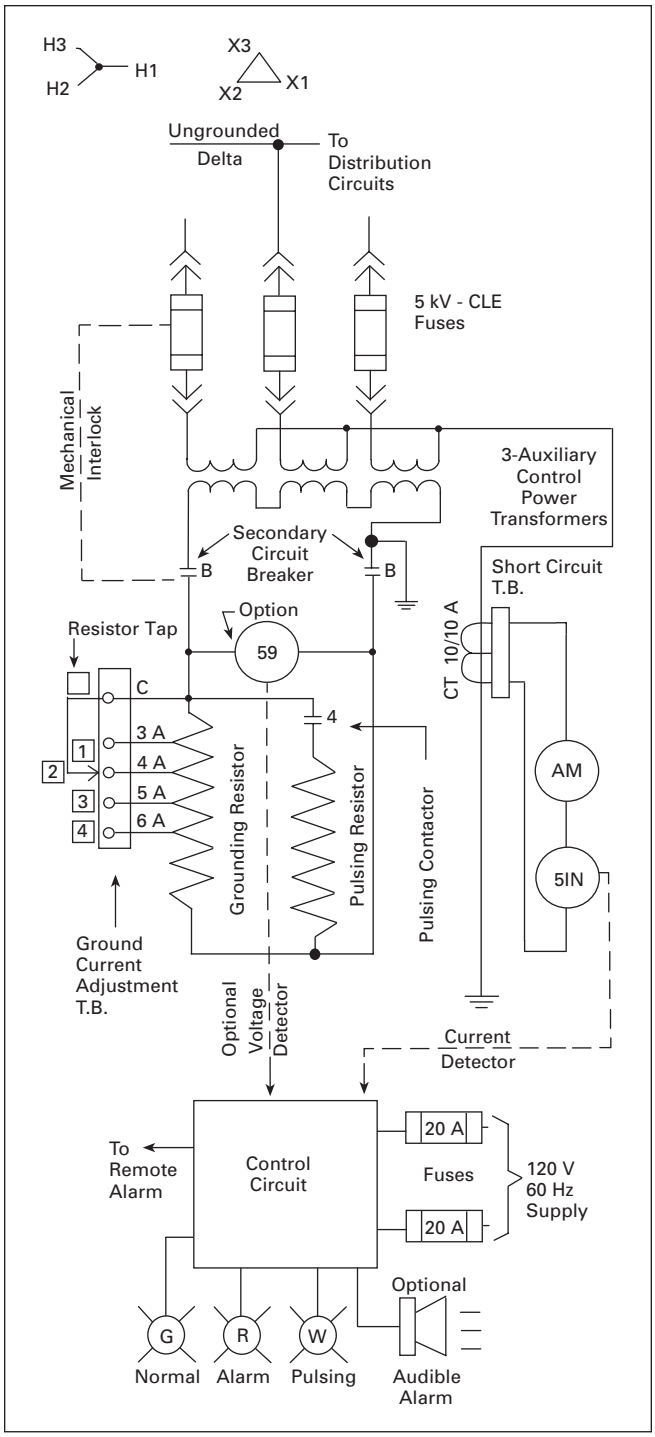

Figure 36.1-3. Ungrounded Delta System (With Standard Current and Optional Voltage Relay Fault Detectors)

Dimensions in Inches (mm)

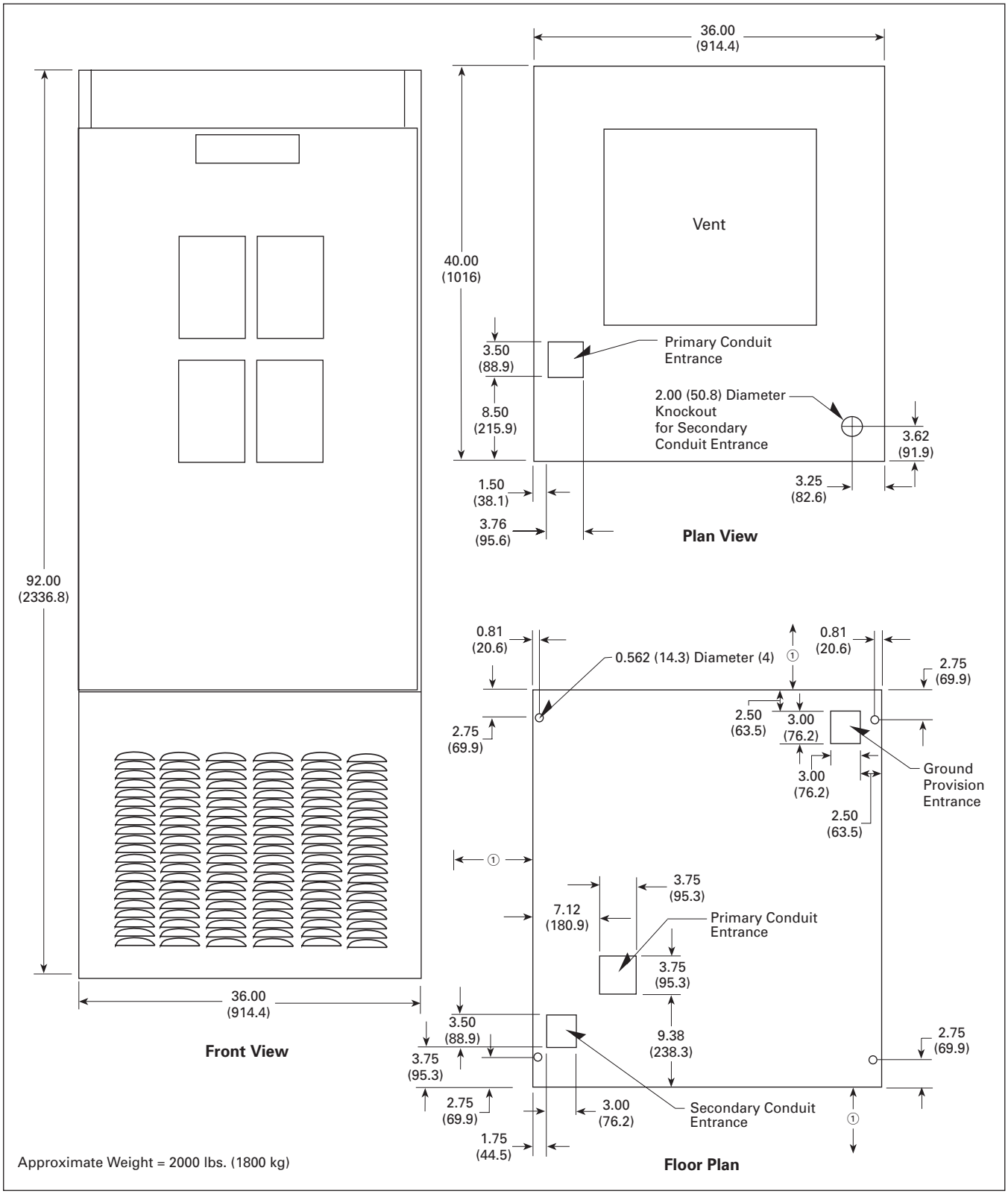

Figure 36.1-4. NEMA 1 Free-Standing

① Minimum required clearances are: front 36.00 inches (914.4 mm), rear 30.00 inches (762.0 mm), left-hand side 30.00 inches (762.0 mm).

Table 36.1-1. CH MV HRG Systems Application Table

Resistor Tap	System	System Voltage	Primary Ground Current Total	CPT Ratio	CPT kVA/Ph	Secondary Ground Current	Resistance for Ground Current (Ohms)	Pulsing Resistor Value (Ohms)	Pulsing Secondary Current	Pulsing Primary Total Current	Resistor Watts Dissipated (kW)			
											Watts Ground	Watts Pulsing	Total Watts	Average Watts
2400V ①														
1	Delta	2400	3.0	2400/120	10	20.00	10.40	7.80	26.70	4.0	4.16	5.55	9.77	6.94
2	Delta	2400	4.0	2400/120	10	26.70	7.80	7.80	26.70	4.0	5.55	5.55	11.10	8.33
3	Delta	2400	5.0	2400/120	10	33.30	6.24	7.80	26.70	4.0	6.93	5.55	12.48	9.71
4	Delta	2400	6.0	2400/120	10	40.00	5.20	7.80	26.70	4.0	8.32	5.55	13.87	11.10
1	Wye	2400	3.0	1400/140	15	30.00	4.62	3.46	40.00	4.0	4.16	5.54	9.70	6.94
2	Wye	2400	4.0	1400/140	15	40.00	3.46	3.46	40.00	4.0	5.54	5.54	11.08	8.32
3	Wye	2400	5.0	1400/140	15	50.00	2.77	3.46	40.00	4.0	6.93	5.54	12.47	9.71
4	Wye	2400	6.0	1400/140	15	60.00	2.31	3.46	40.00	4.0	8.31	5.54	13.85	11.09
3300V ①														
1	Delta	3300	3.0	3600/120	10	30.00	6.35	4.76	40.00	4.0	5.72	7.62	13.34	9.53
2	Delta	3300	4.0	3600/120	10	40.00	4.76	4.76	40.00	4.0	7.62	7.62	15.24	11.43
3	Delta	3300	5.0	3600/120	10	50.00	3.81	4.76	40.00	4.0	9.53	7.62	17.15	13.44
4	Delta	3300	6.0	3600/120	10	60.00	3.18	4.76	40.00	4.0	11.43	7.62	19.05	15.24
1	Wye	3300	3.0	1950/195	25	30.00	6.35	4.76	40.00	4.0	5.72	7.62	13.34	9.53
2	Wye	3300	4.0	1950/195	25	40.00	4.76	4.76	40.00	4.0	7.62	7.62	15.24	11.43
3	Wye	3300	5.0	1950/195	25	50.00	3.81	4.76	40.00	4.0	9.53	7.62	17.15	13.44
4	Wye	3300	6.0	1950/195	25	60.00	3.18	4.76	40.00	4.0	11.43	7.62	19.05	15.24
4160V ①														
1	Delta	4160	3.0	4160/120	15	34.67	6.00	4.50	46.22	4.0	7.21	9.61	16.82	12.02
2	Delta	4160	4.0	4160/120	15	46.22	4.50	4.50	46.22	4.0	9.61	9.61	19.22	14.42
3	Delta	4160	5.0	4160/120	15	57.77	3.60	4.50	46.22	4.0	12.01	9.61	21.62	16.82
4	Delta	4160	6.0	4160/120	15	69.33	3.00	4.50	46.22	4.0	14.42	9.61	24.03	19.23
1	Wye	4160	3.0	2400/240	25	30.00	8.00	6.00	40.00	4.0	7.20	9.60	16.80	12.00
2	Wye	4160	4.0	2400/240	25	40.00	6.00	6.00	40.00	4.0	9.60	9.60	19.22	14.40
3	Wye	4160	5.0	2400/240	25	50.00	4.80	6.00	40.00	4.0	12.00	9.60	21.60	16.80
4	Wye	4160	6.0	2400/240	25	60.00	4.00	6.00	40.00	4.0	14.40	9.60	24.00	19.20

① Resistances and currents listed are an engineering guide only. Final results may differ somewhat from those listed because of resistor limitations.

Product Selection

Eaton's C-HRG High Resistance Grounding Assembly can be completely described by an 8-digit catalog number: MVRG-_ _ _ _ _ _ _ _

Table 36.1-2. High Resistance Pulsing Grounding Systems Catalog Numbering System

MVRG F W W C L L T S

Enclosure Type ②

Free-standing enclosure for mounting grounding transformer and resistors internally.

F = Free-standing NEMA 1
R = Free-standing NEMA 3R outdoor

Service Voltage

W = 4160V, 60 Hz
X = 2400V, 60 Hz
Y = 3300V, 60 Hz

System Neutral Point

Choose wye when the neutral point of the power source is accessible for direct connection to grounding transformer. Choose delta when there is no neutral or when neutral is not accessible.

W = Wye
D = D (wye broken delta grounding transformer)

Fault Sensing

C = Overcurrent relay (51N)
V = Overcurrent relay (51N) and voltage relay (59)
D = Overcurrent relay (51N) and indicating voltmeter

Audible Alarm

Alarm contacts are standard on all assemblies.

N = No audible alarm
L = Alarm horn with re-alarm timer

Loss of Control Power Alarm

A relay is connected across the customer's 120 Vac supply.

N = No relay
L = Alarm relay with 1NO and 1NC

Wiremarkers

Marks all internal wiring for ease of maintenance.

S = Standard wrap-on
T = Tube/heat shrink type

Indicating Lamps

Standard lights are industrial, oil-tight, transformer type. Optional are the same type lights except with a push-to-test feature.

T = Transformer type incandescent lamps
X = Push-to-test transformer type

② MV HRG is available for outdoor application—contact Eaton.

Example: MVRG-FWWCLLTS defines a free-standing NEMA 1 enclosure, 4200V/60 Hz, wye-connected system, current-sensing control scheme, alarm horn with re-alarm timer, alarm relay with 1NO and 1NC, transformer type incandescent lights, wrap-on wiremarkers.

Low Voltage High Resistance Grounding

General Description

Where continuity of service is a high priority, high-resistance grounding can add the safety of a grounded system while minimizing the risk of service interruptions due to grounds. The concept is a simple one: provide a path for ground current via a resistance that limits the current magnitude, and monitor to determine when an abnormal condition exists. This provides for maximum continuity of service, because no tripping occurs for the resistance limited ground fault.

The ground current path is provided at the point where the service begins, by placing resistance in the connection from system neutral to ground. Control equipment continuously measures ground current; a relay detects when the current exceeds a predetermined level. An alarm alerts building personnel that a ground exists. The system has built-in fault tracing means to assist in finding the source of the ground. An integral transformer provides control power from the primary source.

Standard Features

- Current sensing ground fault detection (1–5A pickup/0.5–20 second delay)
- Ground current transformer (10/10 ratio)
- Control circuit disconnect switch (fused)
- Lockable door handle
- Ground current ammeter (0–10A, 1% accuracy)
- Indicating lights:
  - Red (ground fault)
  - Green (normal)
  - White (pulse)
- Adjustable pulsing timer (0–10 seconds)
- Tapped resistors (1–5A)
- Three-position selector switch (normal, pulse, test)
- Control switch for manual or automatic reset
- Ground fault contacts (1NO/1NC)
- Shorting terminal block for ground current transformer
- UL label
- Rated for use up to 200 kA fault current system
- Front accessible
- Nylon flag type wiremarkers
- Three "zig-zag" or "wye-broken delta" grounding transformers for systems without a neutral point

C-HRG Free-Standing NEMA 1 Unit

C-HRG Wall-Mounted Unit (Separately Mounted Resistors Not Shown)

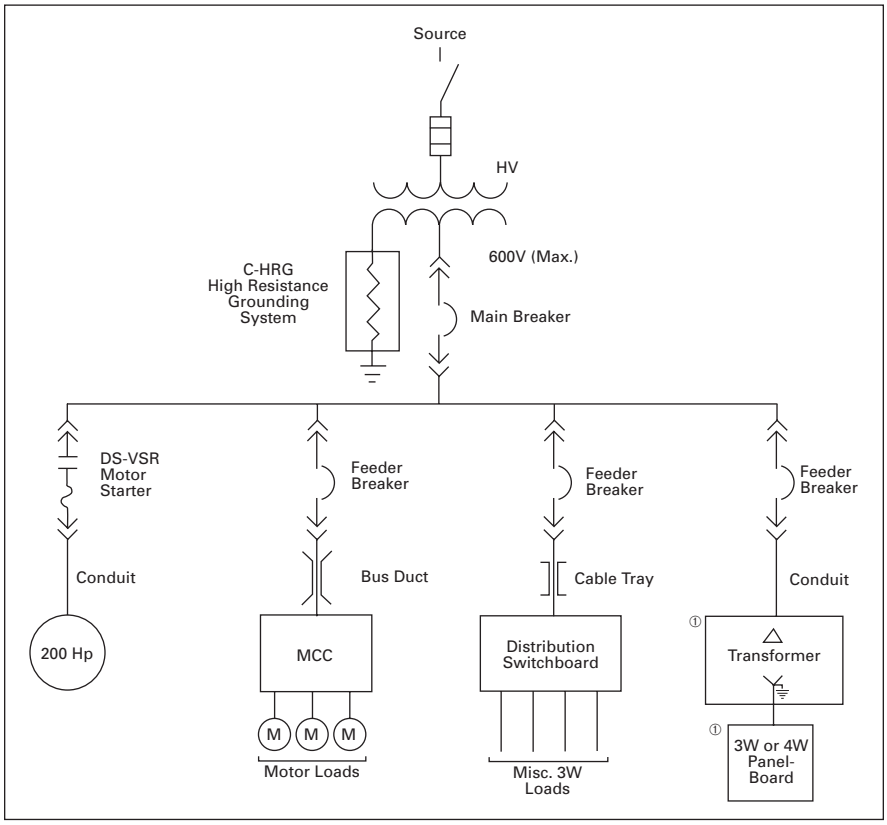

Figure 36.2-1. Typical Distribution System

① Phase-to-neutral loads require a delta-wye distribution transformer. The neutral on the secondary side of this transformer must be solidly grounded.

Application Issues

600/347V (Maximum) Wye Systems

To add high resistance grounding to a wye-connected system, resistors are placed in series with the neutral-to-ground connection of the power source. The resistors are chosen to limit the current to a maximum value of 5A.

600V (Maximum) Delta Systems

To add high-resistance grounding to an ungrounded delta-connected system, a neutral point must be created. Three single-phase transformers can be interconnected in a zig-zag or wye-broken delta configuration to provide such a neutral point. The transformers and grounding resistors are chosen to limit the ground current to a maximum value of 5A.

Ground Current Detection

Any time a system is energized, a small ground current called the "capacitive charging current" will be observed. For low voltage (600V and below) systems, this naturally-occurring current is typically 1A or less.

When one phase becomes grounded, additional current above the charging level will flow. As all ground current must flow through the grounding resistor/grounding transformer assembly, an ammeter in this circuit will read the total amount of ground current. By placing a current-sensing relay in series with the ammeter, the current relay can be adjusted to pick up at a level in excess of the capacitive charging current, thus indicating the abnormal condition.

Alternatively, an optional voltmeter-relay can be connected across the grounding resistors. The voltage across the resistors is proportional to the amount of ground current. The voltmeter-relay's pickup adjustment is set above the capacitive charging current, to the desired detection level.

In both current and voltage detection methods, the ground current ammeter provides a direct reading of the total, actual ground current present in the system at that time. It will be helpful to periodically note the ammeter's reading; a trend toward higher values may indicate the need for equipment maintenance and hence reduce the occurrence of unplanned shutdowns.

Indication and Alarm Circuits

When a fault is detected, an adjustable time delay is provided to override transients. When the time delay has been exceeded, the green "normal" light will turn off, the red "ground fault" light will turn on, and the ground alarm contacts will transfer. If equipped with the optional alarm horn, it will sound.

When the fault is cleared, the current/voltage relay will reset. If the reset control is set on "auto," the lights will return to "normal" on, "ground fault" off, and the ground alarm contacts will re-transfer. If the reset control is set on "manual," the lights and relay will remain latched until the operator turns the reset control to "reset." The lights and ground alarm contacts will then return to normal. The system can be reset only if the fault has been cleared.

During a fault, the optional alarm horn can be silenced at any time by using the "alarm silence" pushbutton. It will not re-sound until either the system is reset, or the re-alarm timer expires. The re-alarm timer is activated by the "alarm silence" control. If the horn has been silenced but the fault has not been cleared, the timer will run. It has a range of 2–48 hours. When the timer times out, the horn will re-sound, alerting maintenance personnel that the fault has not been cleared.

Test Circuit

A test circuit Is provided to allow the user to quickly determine that the system is working properly. The test circuit will operate only under normal conditions—it will not allow testing if the system is sensing a fault. A separate grounding resistor is provided, connected to a relay operated by the "test" position of the mode selector switch. The relay's contact grounds phase B through the test resistor, causing ground current to flow. The system then reacts as it would under actual system ground conditions—lights transfer, alarm contacts transfer and the (optional) horn sounds.

Pulser Circuit

The pulser circuit offers a convenient means to locate the faulted feeder and trace the fault to its origin. The pulser is available any time a fault has been detected. The pulse intervals are controlled by an adjustable recycle timer. The "pulse" light flashes on and off, corresponding to the on-off cycles of the pulser contactor. The pulser contactor switches a bank of resistors on and off, thus allowing a momentary increase in the ground current (approximately a 5A current pulse above the ground current).

Locating a Ground Fault

The current pulses can be noted with a clamp-on ammeter when the ammeter is placed around the cables or conduit feeding the fault. The operator tests each conduit or set of cables until the pulsing current is noted. By moving the ammeter along the conduit, or checking the conduit periodically along its length, the fault can be traced to its origin. The fault may be located at the point where the pulsing current drops off or stops.

If little or no change in the pulsing current is noted along the entire length of a conduit, then the fault may be in the connected load. If the load is a panelboard, distribution switchboard or motor control center, repeat the process of checking all outgoing cable groups and conduits to find the faulted feeder. If the fault is not found in an outgoing feeder, the fault may be internal to that equipment.

Application Notes

It may not be possible to precisely locate faults within a conduit. The ground current may divide into many components, depending on the number of cables per phase, number of conduits per feeder, and the number and resistance of each ground point along the conduits. The resulting currents may be too small to allow detection or may take a path that the ammeter cannot trace. An important note to keep in mind is that while the pulser can greatly aid in locating a fault, there may be certain conditions under which the pulses cannot be readily traced, and other test procedures (meg-ohm, high-potential, etc.) may be needed.

Application Note: Per 1993 NEC 250.5b, exception No. 5, line-to-neutral loads may not be connected to a system where the system is resistance-grounded.

Sequence of Operations

Normal

- Green "normal" light on
- Red "ground fault" light off
- White "pulse" light off
- System control switch in "normal" position
- Reset control switch in either "auto" or "manual"

Test

Turn and hold the system control switch in the "test position." Phase B will be grounded via the test resistor. The ground-current will activate the sensing circuit, causing the green "normal" light to turn off and the red "ground fault" light to turn on. The pulser will be activated as well. The white "pulse" light will turn on and off as the pulser contactor closes and opens. The ground current ammeter will display the total ground current, including the incremental pulse current. When ready, return the system control switch to "normal." The pulser will stop. If the reset control is in the "manual" position, turn it to "reset" to reset the fault sensing circuit. The red "ground fault" light will turn off, and the green "normal" light will turn on. Test mode is not available if the system is detecting a ground. The sensing circuit will disable the test circuit.

Ground Fault

When the sensing circuit detects a fault, the green "normal" light will turn off and the red "ground fault" light will turn on. The ground current ammeter will indicate the total ground current. To use the pulser, turn the system control switch to "pulse." The pulser contactor will cycle on and off as controlled by the recycle timer relay. Use the clamp-on ammeter to locate the faulted feeder. Open the feeder and clear the fault. If the reset control switch is in the "manual" position, turn it to "reset" to reset the sensing circuit. (If reset control is in "auto," it will reset itself.) When ready to restore service to the load, close the feeder. Return the system control to "normal."

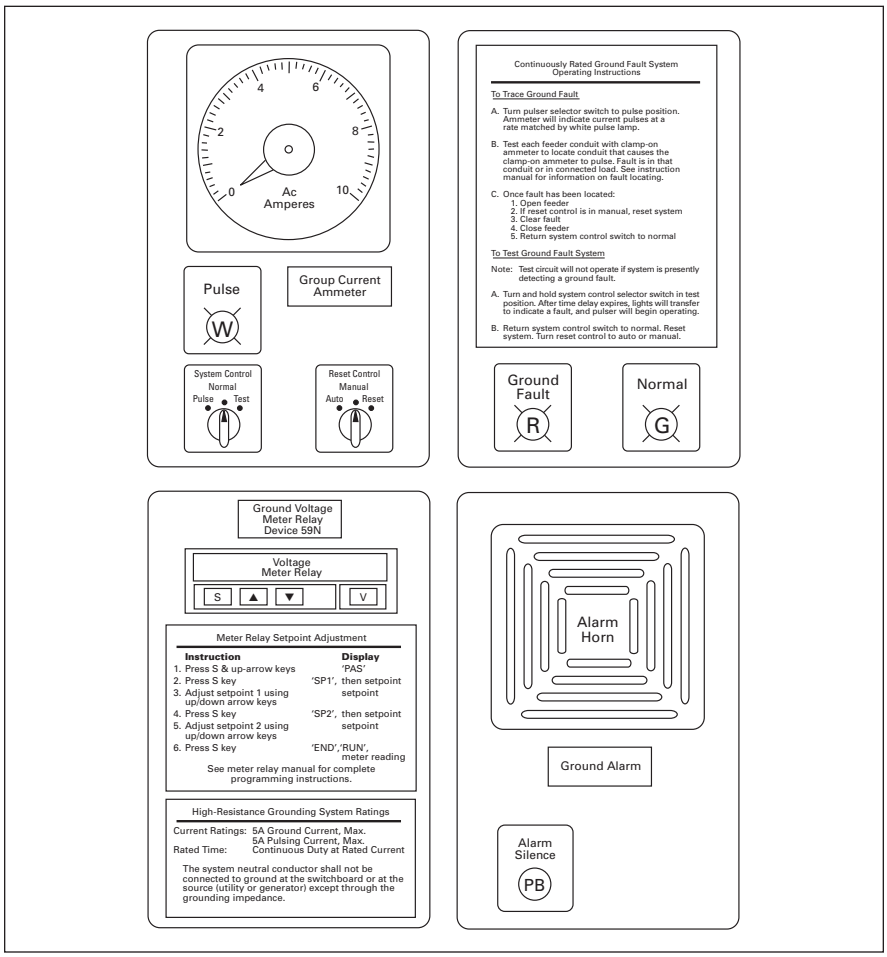

Figure 36.2-2. Front Door Layout

Construction Features

1. Tapped resistors supply ground current between 1 and 5A in 1A increments.
2. Pulse current is an additional 5A. (Pulse currents of a lower magnitude may be difficult to detect.)
3. Pulse timer is adjustable from 3 to 60 pulses per minute.
4. Time delay for current sensing relay is 0.5 to 20 seconds with a 1 to 5A pickup. (Time delay for voltage sensing relay is 1 to 60 seconds.)
5. Fused disconnects are supplied for control and ground transformers.
6. All door-mounted equipment is guarded against accidental contact.
7. All exterior nameplates are fastened with stainless steel screws.
8. Nameplates are 2-ply with 3/16-inch lettering. The nameplate size is 1-inch x 2-1/2 inches white background with black lettering is standard.
9. Top and bottom cable entry areas are standard.
10. Phase and neutral terminals accept #12 AWG to #8 AWG.
11. Ground terminal accepts wire sizes from #8 AWG to 500 kcmil. Ground bus is 1⁄4-inch x 2 inches copper.
12. The paint is applied using an electro-deposition coating system. Metal surfaces are prepared by spray and dip cleaning, and phosphatizing. The standard color is ANSI 61, light gray.
13. Line side fuses are rated for use up to 200 kA fault current systems. All other fuses are rated to protect each circuit as required.
14. The resistors are wire wound on a steel tube, insulated by Micarta. Resistors are mounted on a steel rack with ceramic insulators.
15. No. 8 AWG wire is used for internal connections from the neutral point to ground. Control connections are a minimum of #14 gauge. All control wires insulation is type SIS.
16. UL listed.
17. A list of recommended spare parts can be provided after the final engineering is complete.
18. Steel pocket on the inside of the door is provided to hold drawings and manuals.

Catalog Numbering System

Table 36.2-1. Type C-HRG (Low Voltage) Catalog Numbering System

F 4 W N C R N S F 4 6

Enclosure Type
- **F** = Free-standing, Type 1
- **S** = Free-standing, Type 1 with screened vents
- **R** = Free-standing, Type 3R
- **W** = Wall-mounted, Type 1
- **N** = No enclosure (panel-mounted)
- **V** = Wall-mounted, Type 1 with 3R resistor enclosure

Distribution System Voltage
- **6** = 600V
- **4** = 480V
- **3** = 380V
- **2** = 208–240V

System Neutral Point
- **W** = Wye (and accessible at system)
- **Z** = Delta (zig-zag grounding transformers)
- **D** = Delta (wye-broken delta grounding transformers)

Distribution System Fault Current
- **6** = 25 kA at 600V, 65 kA at 480 and 380V, 200 kA at 240V
- **1** = 150 kA at 480 and 380V, 200 kA at 240V
- **2** = 200 kA at 600V, 480V or 380/280V
- **N** = Not applicable (when using "W" above)

Ground Fault Sensing
- **C** = Current-sensing relay, with low pass filter ①
- **D** = Voltage sensing relay, double set point
- **H** = Voltage sensing relay (D) with low pass filter ①

Audible Alarm
- **N** = No audible alarm
- **R** = Alarm horn with re-alarm timer

Loss of Control Power Relay (Alarm)
- **N** = No relay
- **L** = Alarm relay with 1NO/1NC contact

Indicating Lights
- **S** = Standard incandescent
- **L** = Standard LED
- **P** = Push-to-test incandescent
- **D** = Push-to-test LED
- **T** = Transformer-type incandescent
- **X** = Push-to-test transformer-type

Wire Marker
- **M** = Machine printed
- **F** = Sleeve type
- **H** = Heat shrink, sleeve type

Wire Harness Length for "N" (No Enclosure)
- **4** = 4-foot harness
- **6** = 6-foot harness
- **8** = 8-foot harness
- **0** = 10-foot harness
- **2** = 12-foot harness

System Frequency
- **5** = 50 Hz
- **6** = 60 Hz

① Low pass filter attenuates high frequency ground current signals, as typically produced by variable speed drives, allowing the ground relay to see only power frequency ground current.

Technical Data

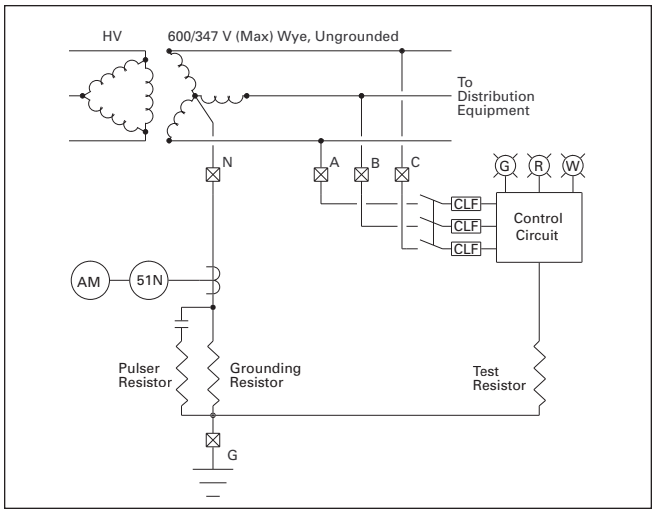

Figure 36.2-3. Four-Wire Source—Fault Detection via Current Relay

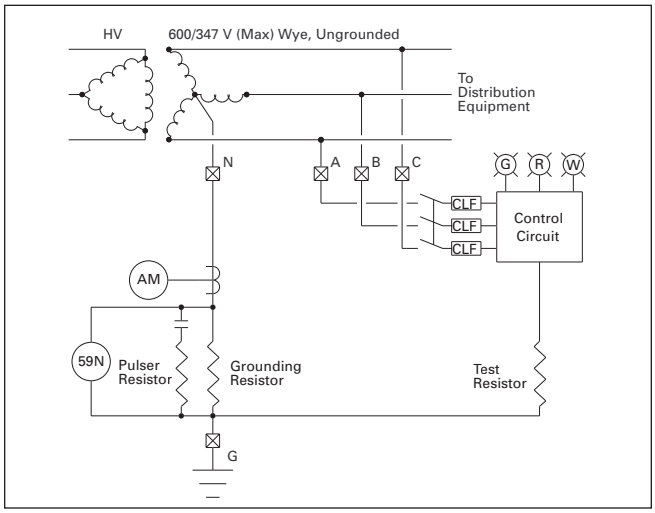

Figure 36.2-4. Four-Wire Source—Fault Detection via Voltmeter Relay

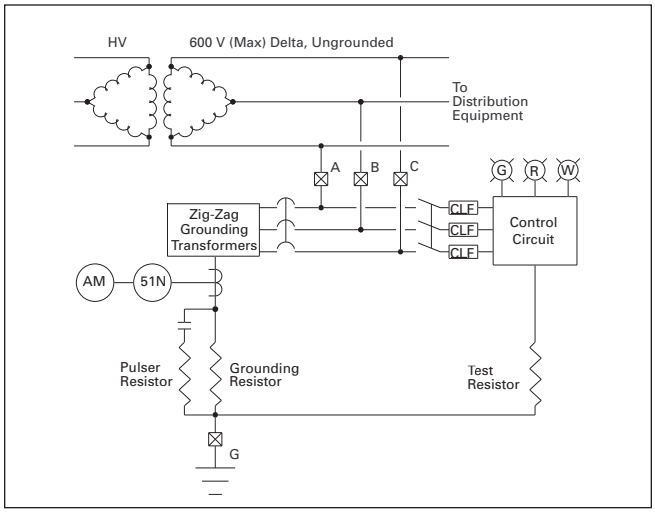

Figure 36.2-5. Three-Wire Source—Fault Detection via Current Relay

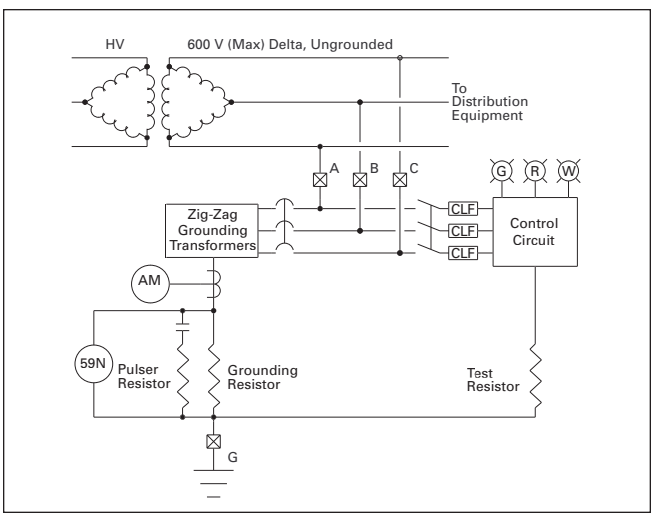

Figure 36.2-6. Three-Wire Source—Fault Detection via Voltmeter Relay

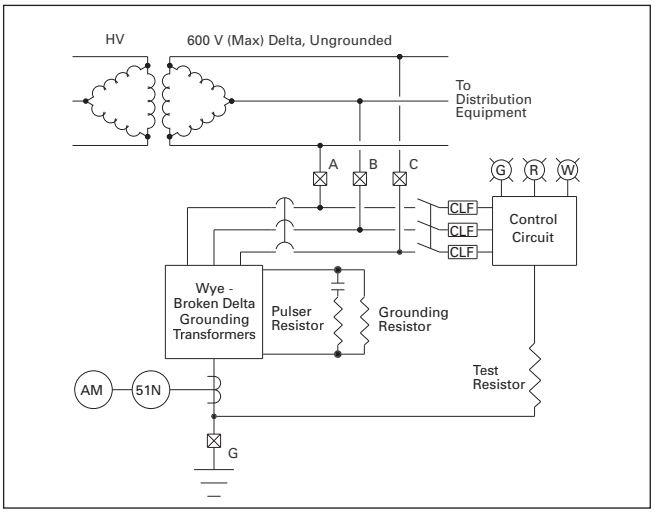

Figure 36.2-7. Three-Wire Source—Fault Detection via Current Relay

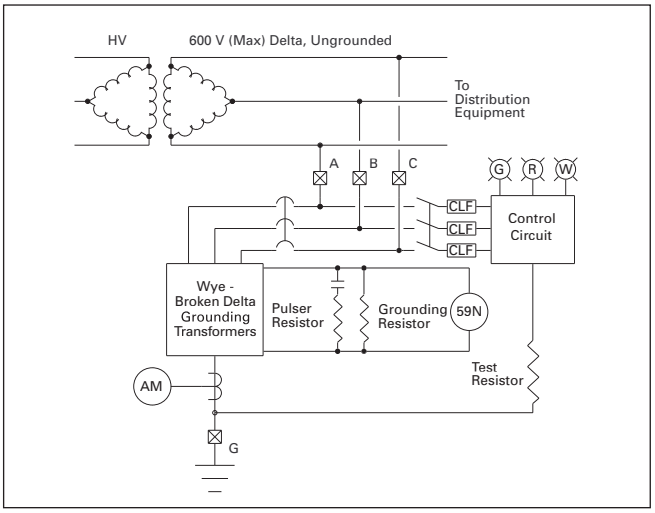

Figure 36.2-8. Three-Wire Source—Fault Detection via Voltmeter Relay

Layout—Dimensions

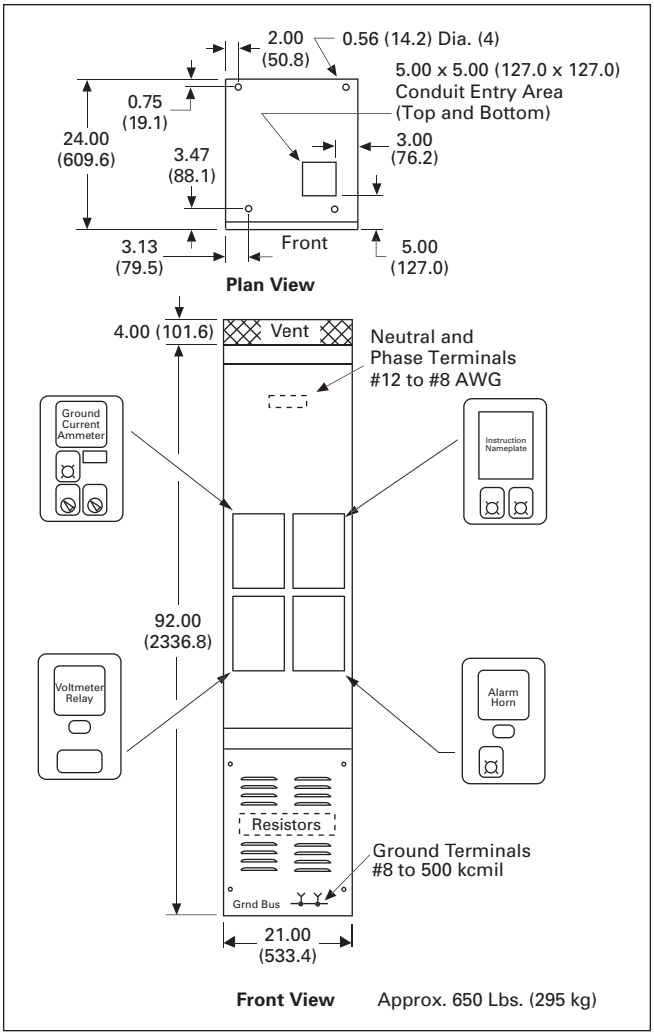

Figure 36.2-9. NEMA 1 Free Standing

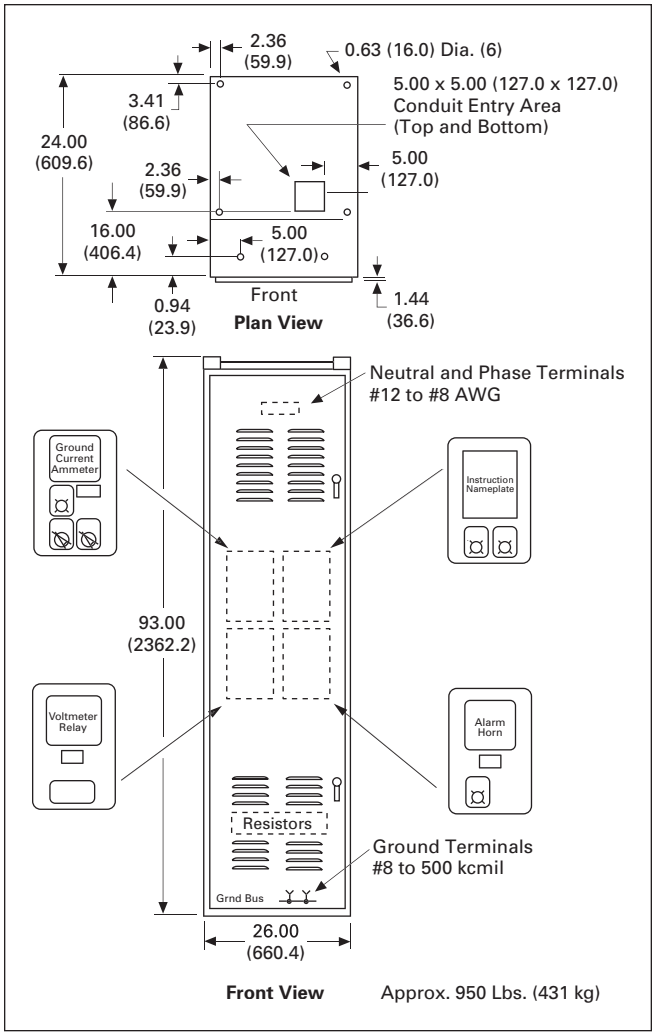

Figure 36.2-10. NEMA 3R Outdoor

36

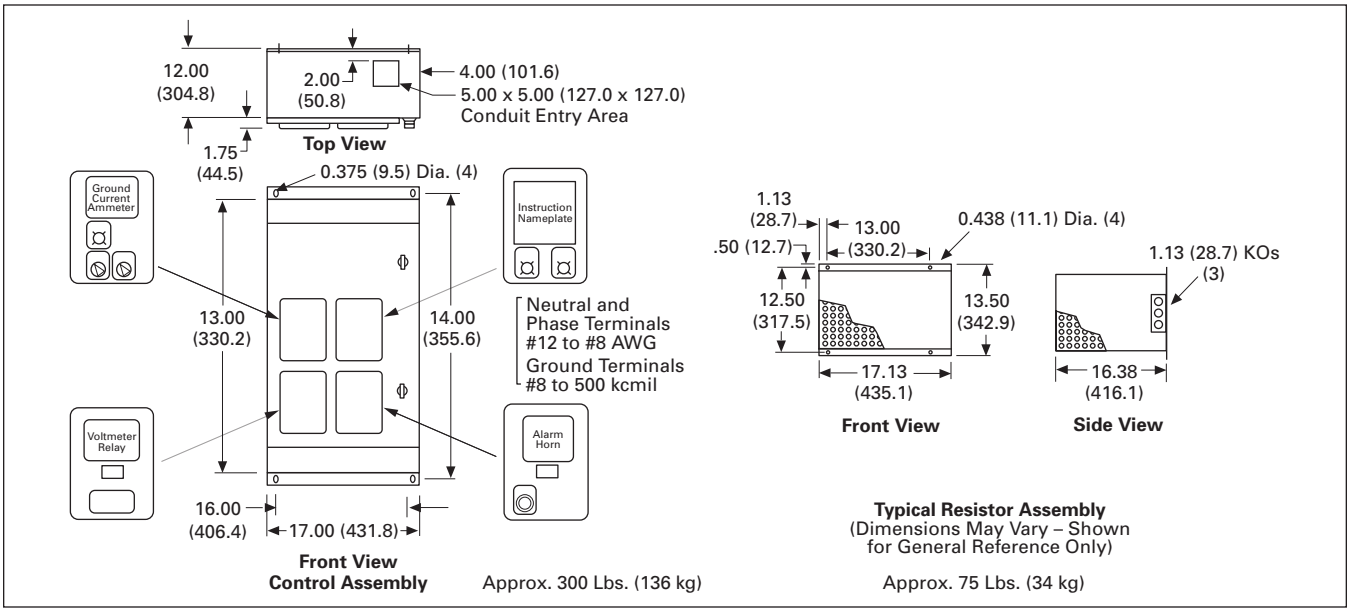

Figure 36.2-11. NEMA 1 Wall Mounted

Dimensions for estimating purposes only.