EATON | Cutler-Hammer

Maintenance Bypass Switch

Technical Data TD01602002E

Supersedes TD01602002E
pages 1-4, dated April 2007
Effective May 2007

Contents

Product Description 2
Application Description 2
Features 2
Benefits 2
General Specifications 2
Technical Data 3
Catalog Numbering System 3
Ratings 3
Dimensions and Terminal Data 4

Product Description

The Cutler-Hammer® Maintenance Bypass Switch is a UL® 1008 listed device that provides a simple and effective means for bypassing uninterruptible power supplies (UPS) while maintaining continuity of power to the critical computer loads. A Maintenance Bypass Switch is a requirement on every UPS installation in order to accommodate the maintenance and testing of the UPS system.

Application Description

The most typical applications of the Maintenance Bypass Switch are on Static or Rotary type UPS systems of 50 kVA or greater.

- Static UPS systems may require maintenance to the inductors or the capacitors that are needed for filtering and SCR commutation.
- Motor Generator systems, while extremely reliable, require more maintenance to the mechanical moving parts. Bearings and couplings need to be greased and examined to ensure proper functioning.

The Cutler-Hammer Maintenance Bypass Switch is the first to offer a UL 1008 listing. As a transfer switch it carries a 100% rating and is compatible with UPS systems up to 750 kVA at 480 volts.

Features

- UL 1008 listing — File E61639.
- Make-before-break electrical operation.
- Lockout circuit to be wired into the UPS bypass authorization.
- Pilot devices to show UPS position "Normal" and "Bypassed."
- Pilot device to show "Lockout" enabled.
- Reliable manually initiated electrical operation.
- High interrupting ratings are standard.
- Solid neutral connections are standard.

Benefits

- Safe and reliable operation is ensured due to the simple and durable switching design.
- Unauthorized bypass is prevented by the need of UPS system to send the bypass authorized signal.
- 100% current ratings make selection to the UPS kVA ratings easy to accomplish.
- Use of high interrupting rating switches or breakers makes the Maintenance Bypass Switches adaptable to systems with high levels of available fault current.

General Specifications

- Frequency 60 Hz.
- Line characteristics:
  - Nominal line voltage +15%, -25%
- Operating temperature:
  - 0°C – 70°C
  - 32°F – 160°F
- Storage temperature -20°C – 85°C.
- Humidity 95% noncondensing.

Note: Contact Eaton for applications other than 60 Hz.

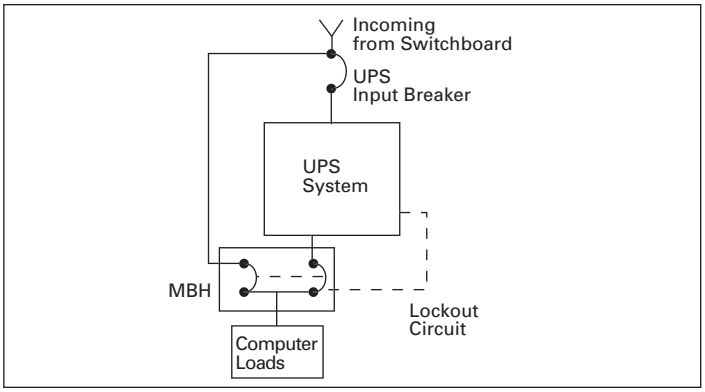

FIGURE 1. APPLICATION WITH STATIC UPS SYSTEM

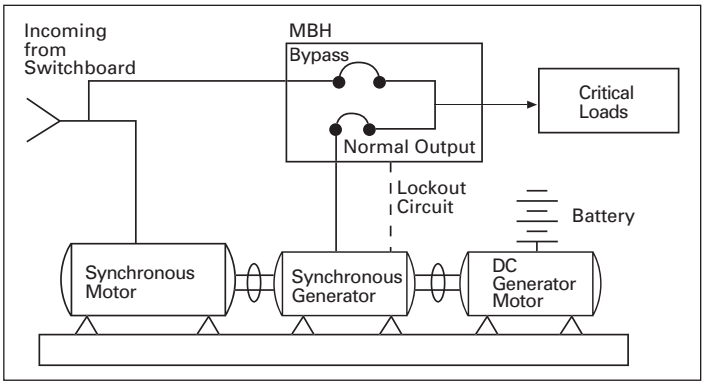

FIGURE 2. APPLICATION WITH ROTARY UPS SYSTEM

TABLE 1. KVA RATING, FULL LOAD CURRENT AND MAINTENANCE BYPASS SWITCH SIZE CROSS-REFERENCE CHART

	208 V		480 V	
KVA RATING	FLA	SWITCH RATING	FLA	SWITCH RATING
30	83.3	100	36.1	100
50	139	150	63	100
65	180	225	81	100
75	208	225	90	100
100	278	300	120	150
125	347	400	150	225
150	416	600	180	225
200	555	600	240	300
225	625	800	271	300
250	722	800	301	400
300	833	1000	361	400
350	972	1000	420	600
400	—	—	480	600
450	—	—	540	600
500	—	—	601	800
600	—	—	720	800
750	—	—	902	1000

TABLE 2. TRANSFER SWITCH EQUIPMENT CATALOG NUMBERING SYSTEM

MB H E FD A 3 0030 A S U

Type (Position 1-2)
- **MB** = Maintenance Bypass

Orientation (Position 3)
- **H** = Horizontal

Logic (Position 4)
- **E** = Electromechanical

Frame Molded Case (Position 5-6)
- **FD** = HFD (100 A – 150 A)
- **KD** = HKD (225 A, 300 A)
- **LD** = HLD (400 A)
- **NB** = NB (600 – 1000 A)

Switch (Position 7)
- **A** = Fixed Mount, Molded Case Switch (MCS) Both

Poles (Position 8)
- **2** = 2-Pole
- **3** = 3-Pole
- **4** = 4-Pole

Amperes (Position 9-12)
- **0100** = 100 A
- **0150** = 150 A
- **0225** = 225 A
- **0300** = 300 A
- **0400** = 400 A
- **0600** = 600 A
- **0800** = 800 A
- **1000** = 1000 A

Voltage (Position 13)
- **A** = 120 V, 60 Hz
- **B** = 208 V, 60 Hz
- **W** = 240 V, 60 Hz
- **X** = 480 V, 60 Hz
- **E** = 600 V, 60 Hz

Enclosure (Position 14)
- **K** = Open
- **S** = NEMA® 1
- **J** = NEMA 12
- **R** = NEMA 3R
- **L** = NEMA 4
- **D** = NEMA 4X

Listing (Position 15)
- **U** = UL Listed
- **R** = (Recognized)
- **X** = No Listing

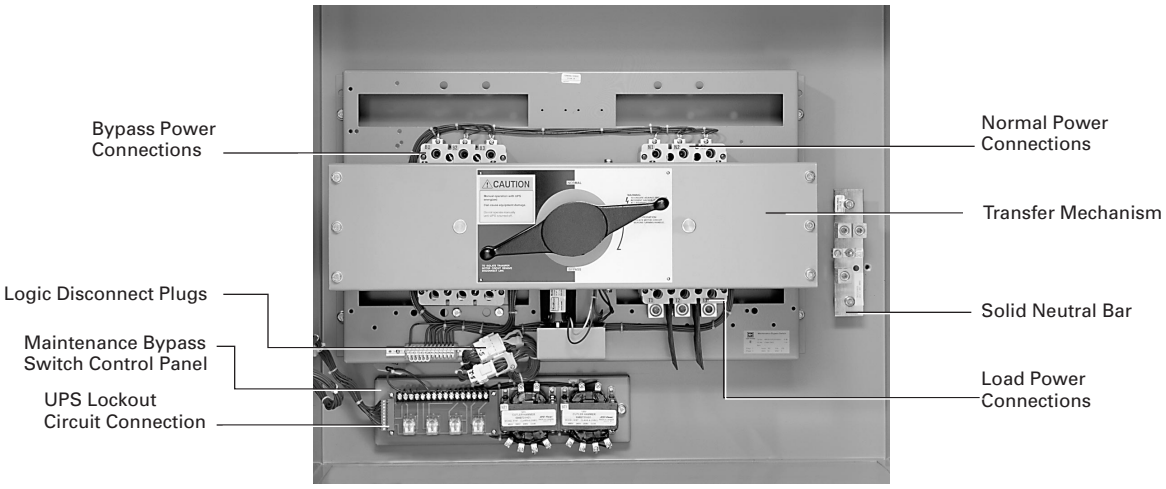

FIGURE 3. MAINTENANCE BYPASS SWITCH

TABLE 3. STANDARD WITHSTAND, CLOSING AND INTERRUPTING RATINGS ①

	RATING WHEN USED WITH UPSTREAM CIRCUIT BREAKER				RATING WHEN USED WITH UPSTREAM FUSE		
TRANSFER SWITCH AMPERE RATING	SUGGESTED BREAKER RATING ②	240 V	480 V	600 V	MAXIMUM FUSE RATING	FUSE TYPE	480 V
100	100	100	65	25	200	J, T	200
150	150	100	65	25	400	J, T	200
225	225	100	65	25	400	J, T	200
300	300	100	65	25	400	J, T ③	200
400	400	65	35	25	600	J, T	200
600	600	65	50	25	800/1200	J, T	100/200
800	800	65	50	25	1200/1600	L	100/200
1000	1000	65	50	25	1600	L	200

① Tested in accordance with UL 1008.
② For maximum breaker rating in circuits where the transfer switch is evaluated as a "motor branch circuit conductor" refer to the NEC® Section 430-25 for sizing.
③ Also can use Class RK5 fuse with 100 kA rating.

Note: To attain the maximum rating shown in the chart, when protected by an upstream breaker, the upstream device must have an equivalent interrupting rating.

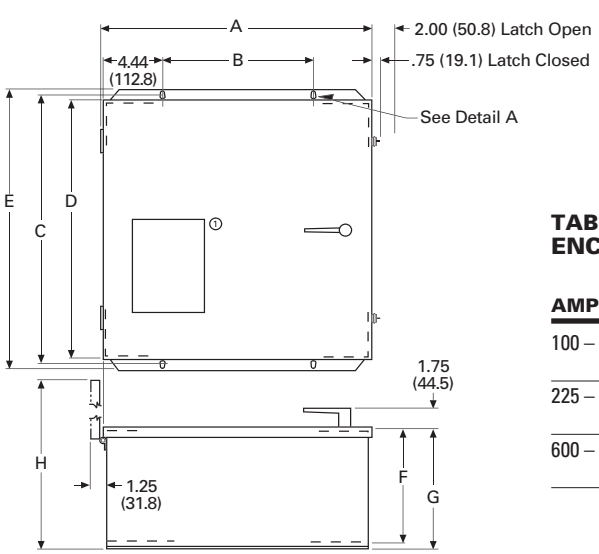

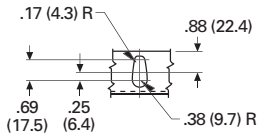

Detail A

TABLE 4. OUTLINE DIMENSIONS IN INCHES (MM) FOR NEMA 1 ENCLOSURE

AMPERES	A	B	C	D	E	F	G	H
100 – 150	22.88 (581.2)	13.13 (333.5)	22.74 (577.6)	22.62 (574.5)	24.50 (622.3)	9.78 (248.4)	10.28 (261.1)	32.31 (820.7)
225 – 400	38.88 (987.6)	29.13 (739.9)	35.74 (907.8)	35.62 (907.8)	37.50 (952.5)	17.28 (438.9)	17.78 (451.6)	55.81 (1417.6)
600 – 1000	38.88 (987.6)	29.13 (739.9)	49.74 (1263.4)	49.62 (1260.3)	51.50 (1308.1)	17.28 (438.9)	17.78 (451.6)	55.81 (1417.6)

FIGURE 4. OUTLINE DIMENSIONS AND TERMINAL DATA

TABLE 5. MBHE WEIGHTS — IN LBS. (KG)

FRAME (AMPERES)	NEMA 1 AND 3R	NEMA 4X
100	130 (59)	375 (170)
150 – 300	300 (136)	864 (392)
400	330 (150)	950 (431)
600 – 1000	490 (222)	1410 (640)

TABLE 6. MAINTENANCE BYPASS SWITCH TERMINAL DATA

MAINTENANCE BYPASS SWITCH (MBHE)		STANDARD TERMINAL DATA			
AMPERES	BREAKER FRAME	NORMAL	STANDBY	LOAD	NEUTRAL
100 – 150	HFD	(1) #14 – 1/0	(1) #14 – 1/0	(1) #14 – 1/0	(3) #14 – 1/0
225 – 300	HKD	(1) #3 – 350	(1) #3 – 350	(1) #6 – 350	(3) #4 – 350
400	HLD	(1) 4/0 – 600	(1) 4/0 – 600	(2) #1 – 500	(6) 250 – 350
600	NB	(3) 3/0 – 400	(3) 3/0 – 400	(3) 3/0 – 400	(12) 4/0 – 500
800	NB	(4) 4/0 – 500	(4) 4/0 – 500	(4) 4/0 – 500	(12) 4/0 – 500
1000	NB	(4) 4/0 – 500	(4) 4/0 – 500	(4) 4/0 – 500	(12) 4/0 – 500

Cutler-Hammer is a federally registered trademark of Eaton Corporation. UL is a registered trademark of Underwriters Laboratories Inc. NEMA is the registered trademark and service mark of the National Electrical Manufacturers Association. National Electrical Code and NEC are registered trademarks of the National Fire Protection Association, Quincy, Mass.

Eaton Corporation
Electrical Group
1000 Cherrington Parkway
Moon Township, PA 15108
United States
877-ETN CARE (877-386-2273)
Eaton.com

© 2007 Eaton Corporation
All Rights Reserved
Printed in USA
Publication No. TD01602002E / Z5779
May 2007

EATON | Cutler-Hammer