C30CN Mechanically and Electrically Held

CN35 Electrically Held

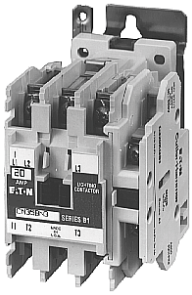

A202 Magnetically Latched

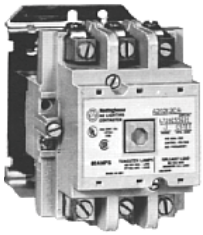

6.1 Open Control

Product Overview V5-T6-2

C30CN Mechanically and Electrically Held

- Product Description V5-T6-3
- Application Description V5-T6-3
- Features V5-T6-4
- Standards and Certifications V5-T6-4
- Instructional Leaflets V5-T6-4
- Catalog Number Selection V5-T6-5
- Product Selection V5-T6-6
- Components V5-T6-10
- Replacement Parts V5-T6-11
- Technical Data and Specifications V5-T6-12
- Wiring Diagrams V5-T6-13
- Dimensions V5-T6-15

CN35 Electrically Held

- Product Description V5-T6-16
- Application Description V5-T6-16
- Features V5-T6-16
- Standards and Certifications V5-T6-16
- Instructional Leaflets V5-T6-16
- Product Selection V5-T6-17
- Accessories V5-T6-18
- Renewal Parts V5-T6-20
- Dimensions V5-T6-21

A202 Magnetically Latched

- Product Description V5-T6-23
- Application Description V5-T6-23
- Features V5-T6-23
- Standards and Certifications V5-T6-23
- Instructional Leaflets V5-T6-23
- Product Selection V5-T6-24
- Accessories V5-T6-24
- Renewal Parts V5-T6-25
- Technical Data and Specifications V5-T6-26
- Wiring Diagrams V5-T6-26
- Dimensions V5-T6-27

Lighting Contactors-Open Control

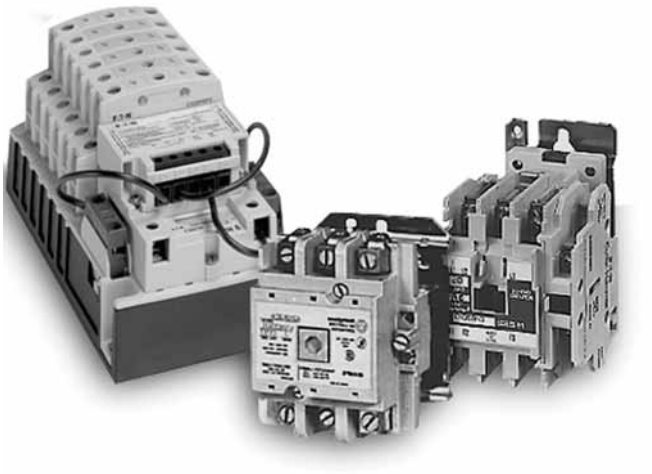

Contents

Description	*Page*
Open Control	
C30CN Mechanically and Electrically Held	**V5-T6-3**
CN35 Electrically Held	**V5-T6-16**
A202 Magnetically Latched	**V5-T6-23**

Product Overview

C30CN Mechanically and Electrically Held

Electrically and Mechanically Held C30CN Lighting Contactor by Eaton Electrical delivers unprecedented versatility in application, simplicity in configuration, and performance in operation. With a revolutionary design, rugged construction and expansive feature set, the C30CN is the right solution for effectively controlling tungsten (incandescent filament), ballast (fluorescent and mercury arc), High Intensity Discharge (HID), and non-motor AC resistive loads.

Application Description

Magnetically Latched—A202

Used in applications where it is critical that the contactor will not switch to an off position during control power failure.

30–200A contactors use an electrically energized and de-energized permanent magnet, while the 300 and 400A contactors use a mechanical latch to hold contacts closed during the operation (no continuous control current).

Electrically Held CN35

Use in applications where it is not critical that contacts stay closed with loss of control power.

- Control power is applied continuously during operation
- 10–400A, 600 volt maximum rating
- 12 poles maximum for 20 and 30A devices

C30CNM Mechanically and Electrically Held

Contents

Description	*Page*
C30CN Mechanically and Electrically Held	
Standards and Certifications	**V5-T6-4**
Instructional Leaflets	**V5-T6-4**
Product Selection	**V5-T6-6**
Components	**V5-T6-10**
Replacement Parts	**V5-T6-11**
Technical Data and Specifications	**V5-T6-12**
Wiring Diagrams	**V5-T6-13**
Dimensions	**V5-T6-15**
CN35 Electrically Held	**V5-T6-16**
A202 Magnetically Latched	**V5-T6-23**

C30CN Mechanically and Electrically Held

Product Description

The C30CNM 30A Mechanically Held Lighting Contactors from Eaton's electrical sector are designed for industrial, commercial and outdoor lighting applications where efficient control is required. The mechanically held operation ensures that the contactor will not switch to OFF during control power failure. It also ensures the removal of coil from the circuit for noise-free operation and the elimination of all coil losses after the contactor is latched. The control module microprocessor validates the control signal before operation, so it will not respond to momentary voltage spikes of noise. The operation command has a built-in 0.4 second delay to avoid multiple short-term commands that can cause contact fatigue or failure. Also, the feedback loop prevents the contactor from getting out of sequence with switches, even after power failures.

Application Description

The mechanically held lighting contactor provides effective control in applications such as office buildings, industrial plants, hospitals, stadiums, airports, and so on.

They are ideal for applications that require quiet, energy-efficient operation.

Designed to handle different load types:

- Tungsten (incandescent filament)
- Ballast (fluorescent and mercury arc)
- High intensity discharge (HID)
- Non-motor AC resistive
- Single- and three-phase motor ratings

Operation

Three-wire control is the choice for use with momentary devices allowing operation from multiple locations. A momentary pulse of energy operates the contactor while a second pulse on an alternate leg returns the contactor to its original state.

Two-wire control is the choice for single output automatic operation or for operation from single-pole devices. When voltage is applied to the input terminals the contactor is latched into position (coil is removed from the circuit while control voltage is continuously supplied). When control voltage is removed, the latch is disengaged and the contactor is returned to its original state.

Features

See figure below.

- 30A power pole rating
- Up to 12 poles maximum
- Power poles latch easily onto the base, and designating them as NO or NC is a simple matter of left or right positioning. Additional poles, either NO or NC, may be easily added at any time
- Low magnetic noise results in quiet operation
- Low input VA permits long wire runs
- Come in a wide range of input voltages and with coils from 24 Vac to 277 Vac and 12 Vac to 24 Vdc

C30CNM Features

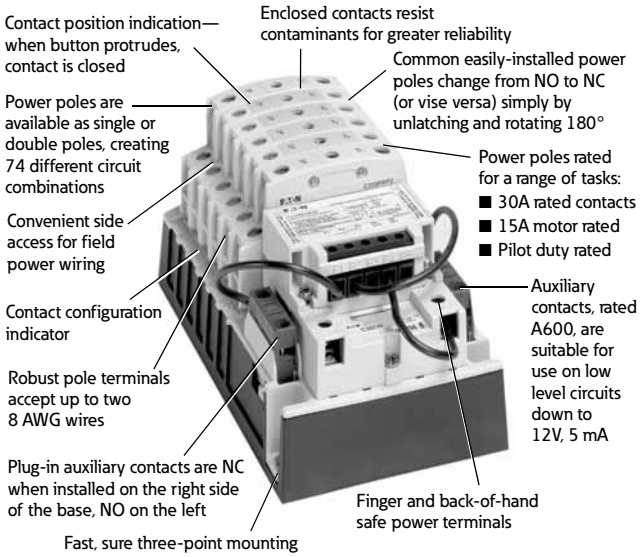

Standards and Certifications

- UL listed File E1491, UL Category Code/ Guide NLDX/NLDX7
- cUL
- CE

Listed Listed

Instructional Leaflets

50765 C30CN Lighting Contactor Series

50766 Coil Kit for C30CN Lighting Contactors

50767 Power Pole Kit for C30CN Lighting Contactors

50768 Control Module Kit for C30CN Lighting Contactors

Catalog Number Selection

Type C30CN Lighting Contactors

C30CN M 2 2 A A 2 A0

Product
C30CN = Open 30A lighting contactor

Class
E = Electrically held
M = Mechanically held

Number of Normally Open Poles
0–12

Number of Normally Closed Poles
0–8

Base Coil Voltage
A = 115–120V 60 Hz/110V 50 Hz
B = 230–240V 60 Hz/220V 50 Hz
C = 460–480V 60 Hz/440V 50 Hz
D = 575–600V 60 Hz/550V 50 Hz
E = 200–208V 60 Hz
H = 265–277V 60 Hz/240V 50 Hz
T = 24V 60 Hz/20V 50 Hz
V = 28V 60 Hz/24V 50 Hz
X = 347V 60 Hz

Control Module Operation
2 = Two-wire
3 = Three-wire

Mechanically Held Control Module Voltage
A0 = 110–120 Vac
H0 = 200–277 Vac
T0 = 24 Vac
T1 = 24 Vdc

Auxiliary Contact Installed

Two-Wire Control Module	Three-Wire Control Module
0 = None **A** = 1NO **B** = 2NO **C** = 1NC **D** = 1NO-1NC **E** = 2NO-1NC	**0** = None **C** = 1NC **F** = 1NO **G** = 1NO-1NC

Sample Catalog Number:	C	3	0	C	N	M	2	2	A	A	2	A	0
Digit Position:	1	2	3	4	5	6	7	8	9	10	11	12	13

Product Selection

Two-Wire Mechanically Held Lighting Contactors—Standard Assembled Forms

The Standard Assembled Forms in tables on **Pages V5-T6-6** and **V5-T6-7** are two-wire open mechanically held 30A lighting contactors with 120V 60 Hz/110V 50 Hz base coil voltage, 120V control module voltage, and no additional auxiliary contacts. To change the base coil voltage, auxiliary contact options or control module voltage, refer to tables on **Page V5-T6-7**.

C30CN_

Two-Wire Mechanically Held Lighting Contactors—Standard Assembled Forms

Number of Poles	NO	NC	Catalog Number ①②③
2	0	2	**C30CNM02A02A0**
	1	1	**C30CNM11A02A0**
	2	0	**C30CNM20A02A0**
3	0	3	**C30CNM03A02A0**
	1	2	**C30CNM12A02A0**
	2	1	**C30CNM21A02A0**
	3	0	**C30CNM30A02A0**
4	0	4	**C30CNM04A02A0**
	1	3	**C30CNM13A02A0**
	2	2	**C30CNM22A02A0**
	3	1	**C30CNM31A02A0**
	4	0	**C30CNM40A02A0**
5	0	5	**C30CNM05A02A0**
	1	4	**C30CNM14A02A0**
	2	3	**C30CNM23A02A0**
	3	2	**C30CNM32A02A0**
	4	1	**C30CNM41A02A0**
	5	0	**C30CNM50A02A0**
6	0	6	**C30CNM06A02A0**
	1	5	**C30CNM15A02A0**
	2	4	**C30CNM24A02A0**
	3	3	**C30CNM33A02A0**
	4	2	**C30CNM42A02A0**
	5	1	**C30CNM51A02A0**
	6	0	**C30CNM60A02A0**
7	0	7	**C30CNM07A02A0**
	1	6	**C30CNM16A02A0**
	2	5	**C30CNM25A02A0**
	3	4	**C30CNM34A02A0**
	4	3	**C30CNM43A02A0**
	5	2	**C30CNM52A02A0**
	6	1	**C30CNM61A02A0**
	7	0	**C30CNM70A02A0**
8	0	8	**C30CNM08A02A0**
	1	7	**C30CNM17A02A0**
	2	6	**C30CNM26A02A0**
	3	5	**C30CNM35A02A0**
	4	4	**C30CNM44A02A0**
	5	3	**C30CNM53A02A0**
	6	2	**C30CNM62A02A0**
	7	1	**C30CNM71A02A0**
	8	0	**C30CNM80A02A0**

Notes

① To change the base coil voltage, replace the content of Position 9 with the appropriate code suffix from the table on **Page V5-T6-7**.

② To change auxiliary contact options, replace the content of Position 10 with the appropriate code suffix from the table on **Page V5-T6-7**.

③ To change the control module voltage, replace the content of Positions 12-13 with the appropriate code suffix from the table on **Page V5-T6-7**.

Two-Wire Mechanically Held Lighting Contactors—Standard Assembled Forms, continued

Number of Poles	NO	NC	Catalog Number ①②③
9	1	8	**C30CNM18A02A0**
	2	7	**C30CNM27A02A0**
	3	6	**C30CNM36A02A0**
	4	5	**C30CNM45A02A0**
	5	4	**C30CNM54A02A0**
	6	3	**C30CNM63A02A0**
	7	2	**C30CNM72A02A0**
	8	1	**C30CNM81A02A0**
	9	0	**C30CNM90A02A0**
10	2	8	**C30CNM28A02A0**
	3	7	**C30CNM37A02A0**
	4	6	**C30CNM46A02A0**
	5	5	**C30CNM55A02A0**
	6	4	**C30CNM64A02A0**
	7	3	**C30CNM73A02A0**
	8	2	**C30CNM82A02A0**
	9	1	**C30CNM91A02A0**
	10	0	**C30CNM100A02A0**
11	3	8	**C30CNM38A02A0**
	4	7	**C30CNM47A02A0**
	5	6	**C30CNM56A02A0**
	6	5	**C30CNM65A02A0**
	7	4	**C30CNM74A02A0**
	8	3	**C30CNM83A02A0**
	9	2	**C30CNM92A02A0**
	10	1	**C30CNM101A02A0**
	11	0	**C30CNM110A02A0**
12	4	8	**C30CNM48A02A0**
	6	6	**C30CNM66A02A0**
	8	4	**C30CNM84A02A0**
	10	2	**C30CNM102A02A0**
	12	0	**C30CNM120A02A0**

Base Coil Voltage (Digit 9) ④

Voltage	Code Suffix
115–120V 60 Hz/110V 50 Hz	**A**
230–240V 60 Hz/220V 50 Hz	**B**
460–480V 60 Hz/440V 50 Hz	**C**
575–600V 60 Hz/550V 50 Hz	**D**
200–208V 60 Hz	**E**
265–277V 60 Hz/240V 50 Hz	**H**
24V 60 Hz/20V 50 Hz	**T**
28V 60 Hz/24V 50 Hz	**V**
347V 60 Hz	**X**

Auxiliary Contact Installed (Digit 10)

Control Module	Circuit	Code Suffix
Two-wire	None	**0**
	1NO	**A**
	2NO	**B**
	1NC	**C**
	1NO-1NC	**D**
	2NO-1NC	**E**

Control Module Voltage (Digit 12-13)

Coil Module	Code Suffix
110–120 Vac	**A0**
200–277 Vac	**H0**
24 Vac	**T0**
12–24 Vdc	**T1**

Notes

① To change the base coil voltage, replace the content of Position 9 with the appropriate code suffix from the table above.

② To change auxiliary contact options, replace the content of Position 10 with the appropriate code suffix from the table above.

③ To change the control module voltage, replace the content of Positions 12-13 with the appropriate code suffix from the table above.

④ If coil supply is greater than 277V, use CPT.

Three-Wire Mechanically Held Lighting Contactors—Standard Assembled Forms

The Standard Assembled Forms in the table on **Page V5-T6-8** are three-wire open mechanically held 30A lighting contactors with 120V 60 Hz/110V 50 Hz base coil voltage, 120V control module voltage, and no additional auxiliary contacts. To change the base coil voltage, auxiliary contact options or control module voltage, refer to the tables on **Page V5-T6-9**.

Three-Wire Mechanically Held Lighting Contactors—Standard Assembled Forms

Number of Poles	NO	NC	Catalog Number ①②③
2	0	2	**C30CNM02A03A0**
	1	1	**C30CNM11A03A0**
	2	0	**C30CNM20A03A0**
3	0	3	**C30CNM03A03A0**
	1	2	**C30CNM12A03A0**
	2	1	**C30CNM21A03A0**
	3	0	**C30CNM30A03A0**
4	0	4	**C30CNM04A03A0**
	1	3	**C30CNM13A03A0**
	2	2	**C30CNM22A03A0**
	3	1	**C30CNM31A03A0**
	4	0	**C30CNM40A03A0**
5	0	5	**C30CNM05A03A0**
	1	4	**C30CNM14A03A0**
	2	3	**C30CNM23A03A0**
	3	2	**C30CNM32A03A0**
	4	1	**C30CNM41A03A0**
	5	0	**C30CNM50A03A0**
6	0	6	**C30CNM06A03A0**
	1	5	**C30CNM15A03A0**
	2	4	**C30CNM24A03A0**
	3	3	**C30CNM33A03A0**
	4	2	**C30CNM42A03A0**
	5	1	**C30CNM51A03A0**
	6	0	**C30CNM60A03A0**
7	0	7	**C30CNM07A03A0**
	1	6	**C30CNM16A03A0**
	2	5	**C30CNM25A03A0**
	3	4	**C30CNM34A03A0**
	4	3	**C30CNM43A03A0**
	5	2	**C30CNM52A03A0**
	6	1	**C30CNM61A03A0**
	7	0	**C30CNM70A03A0**
8	0	8	**C30CNM08A03A0**
	1	7	**C30CNM17A03A0**
	2	6	**C30CNM26A03A0**
	3	5	**C30CNM35A03A0**
	4	4	**C30CNM44A03A0**
	5	3	**C30CNM53A03A0**
	6	2	**C30CNM62A03A0**
	7	1	**C30CNM71A03A0**
	8	0	**C30CNM80A03A0**

Notes

① To change the base coil voltage, replace the content of Position 9 with the appropriate code suffix from the table on **Page V5-T6-9**.
② To change auxiliary contact options, replace the content of Position 10 with the appropriate code suffix from the table on **Page V5-T6-9**.
③ To change the control module voltage, replace the content of Positions 12-13 with the appropriate code suffix from the table on **Page V5-T6-9**.

Three-Wire Mechanically Held Lighting Contactors—Standard Assembled Forms, continued

Number of Poles	NO	NC	Catalog Number ①②③
9	1	8	**C30CNM18A03A0**
	2	7	**C30CNM27A03A0**
	3	6	**C30CNM36A03A0**
	4	5	**C30CNM45A03A0**
	5	4	**C30CNM54A03A0**
	6	3	**C30CNM63A03A0**
	7	2	**C30CNM72A03A0**
	8	1	**C30CNM81A03A0**
	9	0	**C30CNM90A03A0**
10	2	8	**C30CNM28A03A0**
	3	7	**C30CNM37A03A0**
	4	6	**C30CNM46A03A0**
	5	5	**C30CNM55A03A0**
	6	4	**C30CNM64A03A0**
	7	3	**C30CNM73A03A0**
	8	2	**C30CNM82A03A0**
	9	1	**C30CNM91A03A0**
	10	0	**C30CNM100A03A0**
11	3	8	**C30CNM38A03A0**
	4	7	**C30CNM47A03A0**
	5	6	**C30CNM56A03A0**
	6	5	**C30CNM65A03A0**
	7	4	**C30CNM74A03A0**
	8	3	**C30CNM83A03A0**
	9	2	**C30CNM92A03A0**
	10	1	**C30CNM101A03A0**
	11	0	**C30CNM110A03A0**
12	4	8	**C30CNM48A03A0**
	6	6	**C30CNM66A03A0**
	8	4	**C30CNM84A03A0**
	10	2	**C30CNM102A03A0**
	12	0	**C30CNM120A03A0**

Base Coil Voltage (Digit 9) ④

Voltage	Code Suffix
115–120V 60 Hz/110V 50 Hz	**A**
230–240V 60 Hz/220V 50 Hz	**B**
460–480V 60 Hz/440V 50 Hz	**C**
575–600V 60 Hz/550V 50 Hz	**D**
200–208V 60 Hz	**E**
265–277V 60 Hz/240V 50 Hz	**H**
24V 60 Hz/20V 50 Hz	**T**
28V 60 Hz/24V 50 Hz	**V**
347V 60 Hz	**X**

Auxiliary Contact Installed (Digit 10)

Control Module	Circuit	Code Suffix
Three-wire	None	**0**
	1NC	**C**
	1NO	**F**
	1NO-1NC	**G**

Control Module Voltage (Digit 12-13)

Coil Module	Code Suffix
110–120 Vac	**A0**
200–277 Vac	**H0**
24 Vac	**T0**
12–24 Vdc	**T1**

Notes

① To change the base coil voltage, replace the content of Position 9 with the appropriate code suffix from the table above.

② To change auxiliary contact options, replace the content of Position 10 with the appropriate code suffix from the table above.

③ To change the control module voltage, replace the content of Positions 12-13 with the appropriate code suffix from the table above.

④ If coil supply is greater than 277V, use CPT.

Components

Electrically Held Base Contactor

The C30CNE20_0 Electrically Held Base Contactor contains a 2NO power pole as standard and will allow the addition of power poles to build an electrically held contactor up to 12 poles maximum. A mechanically held module kit can also be added to convert the electrically held contactor into a mechanically held contactor in the field.

Electrically Held Base Contactor

Electrically Held Base Contactor

Power Poles	Catalog Number ①
2NO	**C30CNE20_0**

Electrically Held Lighting Contactors ②

Number of Poles	NO	NC	Catalog Number
2	2	0	**C30CNE20_0**
	1	1	**C30CNE11_0**
	0	2	**C30CNE02_0**
4	4	0	**C30CNE40_0**
	2	2	**C30CNE22_0**
	0	4	**C30CNE04_0**
6	6	0	**C30CNE60_0**
8	8	0	**C30CNE80_0**
	4	4	**C30CNE44_0**
	0	8	**C30CNE08_0**

Coil Base Voltage (Digit 8)

Voltage (Digit 8)	Code Suffix
115–120V 60 Hz/110V 50 Hz	**A**
230–240V 60 Hz/220V 50 Hz	**B**
460–480V 60 Hz/440V 50 Hz	**C**
575–600V 60 Hz/550V 50 Hz	**D**
200–208V 60 Hz	**E**
265–277V 60 Hz/240V 50 Hz	**H**
24V 60 Hz/20V 50 Hz	**T**
28V 60 Hz/24V 50 Hz	**V**
347V 60 Hz	**X**

Power Poles

The C30CNM contactor accepts up to a maximum six single- or two-pole (or combinations) power poles. These can be used to form up to:

- 12 NO poles maximum when six two-poles are used in NO positions (1–6) or
- 8 NC poles maximum with four two-poles in the NC position (1–4) and 4 NO poles with two two-poles in the 2 NO positions (5–6)

Power Poles

Power Poles

Power Poles	Catalog Number
Single-pole	**C320PRP1**
Two-pole	**C320PRP2**

Mechanically Held Module Kits

These kits are for converting electrically held contactors to mechanically held units. Kits include control module, latch, latch cover and auxiliary contacts plus installation instructions. Conversion kits are suitable for coil voltages of 277V and below.

Conversion Kits

Mechanically Held Module Kits

Coil Volts	Control Volts	Catalog Number
Two-Wire		
24–277 Vac	110–120 Vac	**C320MH2WA0**
	200–277 Vac	**C320MH2WH0**
	24 Vac	**C320MH2WT0**
	12–24 Vdc	**C320MH2WT1**
Three-Wire		
24–277 Vac	110–120 Vac	**C320MH3WA0**
	200–277 Vac	**C320MH3WH0**
	24 Vac	**C320MH3WT0**
	12–24 Vdc	**C320MH3WT1**

C30CNM Components—Exploded View

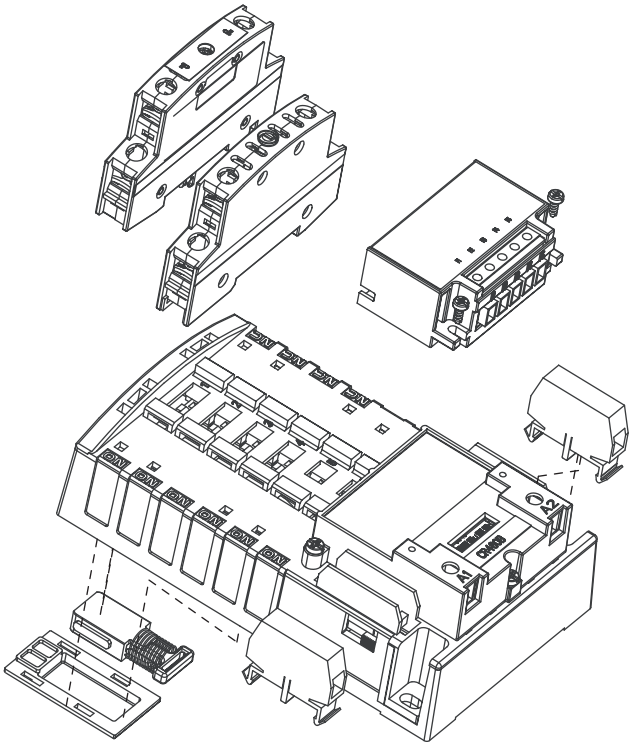

Notes

① When ordering, select required contactor by catalog number and replace the magnet coil alpha designation in the catalog number (_) with the proper code suffix from the Coil Base Voltage table on this page.

② A number of other power pole configurations are also available using the single-pole and two-pole power poles. Electrically held units can be purchased with up to 12-pole configurations with a maximum of 8NO and 4NC power poles.

Auxiliary Contacts

A mechanically held contactor with a two-wire control module uses 1NC auxiliary contact as standard for the control wiring circuit. The mechanically held contactor with a three-wire control module uses 1NO-1NC auxiliary contacts as standard for the control wiring circuit. See table below for possible additional auxiliary contact configurations.

Auxiliary Contacts

Auxiliary Contacts

Auxiliary Block	Catalog Number
Single-pole	**C320AMH1**
Two-pole	**C320AMH2**

Auxiliary Contact Configurations

Two-Wire	Three-Wire
None	1NC (two-pole)
1NO (single-pole)	1NO (two-pole)
2NO (two-pole)	1NO-1NC (two-pole)
1NC (two-pole)	—
1NO-1NC (NO single-pole, NC two-pole)	—
2NO-1NC (two-pole)	—

Replacement Parts

Magnetic Coils

Magnet Coils for Base Contactors

Coil Voltage	Catalog Number
115–120V 60 Hz/110V 50 Hz	**9-3242-1**
230–240V 60 Hz/220V 50 Hz	**9-3242-2**
460–480V 60 Hz/440V 50 Hz	**9-3242-3**
575–600V 60 Hz/550V 50 Hz	**9-3242-4**
200–208V 60 Hz	**9-3242-5**
265–277V 60 Hz/240V 50 Hz	**9-3242-6**
24V 60 Hz/20V 50 Hz	**9-3242-7**
28V 60 Hz/24V 50 Hz	**9-3242-8**
347V 60 Hz	**9-3242-9**

Technical Data and Specifications

Main Power Poles

Maximum AC Voltage and Ampere Ratings

Load Type	Amps Continuous	Poles Single-Phase	Three-Phase
Ballast	30	347 Vac	600 Vac
General use	30	600 Vac	600 Vac
Tungsten	20	277 Vac	480 Vac
AC resistive	30	600 Vac	600 Vac

Maximum Horsepower Rating

Normal Starting Duty

Volts	Horsepower
Single-Pole, Single-Phase	
110–120V	1
220–240V	2
Three-Pole, Three-Phase	
200–208V	3
220–240V	5
440–480V	10
550–600V	15

Control Circuit Characteristics

Coil

Description	VA
Inrush	248 VA
Sealed	28 VA

Control Module

Input Voltage	Steady State Current at Rated Voltage (mA)	Maximum VA
12–24 Vdc	42	2
24 Vac	80	5
115–120 Vac	83	12
200–277 Vac	91	30

Other Control Module Characteristics

Description	Specification
Minimum pulse duration (three-wire control module)	250 ms
Maximum allowable leakage current	1.8 mA
EMI	35 V/m
Surge transient peak	6 kV
Frequency range	40–70 Hz

Auxiliary Contacts Rating

A600, 24 Vdc, 24 Vac

Ambient Temperature

–13 to 104°F (–25 to 40°C)

Mounting Position

Vertical 3-point mounting only

Wire Size

Wire Specifications

Component	Number of Cables	Wire Range (Solid or Stranded)	Wire Temperature
Power poles	1	14–8 AWG	75°C Cu
	2	14–8 AWG ①	75°C Cu
Coil	1 or 2	18–14 AWG	60°/75°C Cu
Control module	1	22–12 AWG	60°/75°C Cu
Auxiliary contacts	1 or 2	22–12 AWG	60°/75°C Cu

Note

① 8 AWG stranded only.

Wiring Diagrams

C30CNE

C30CNE Electrically Held

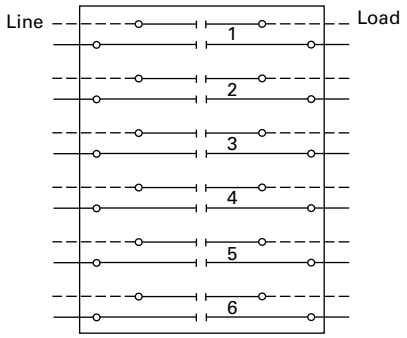

View A

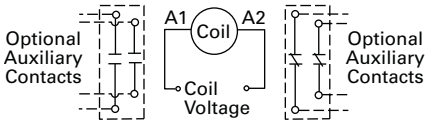

CONTROL
Refer to View "B" for Control Connections

View B
Optional Pilot Devices for Electrically Held Contactor

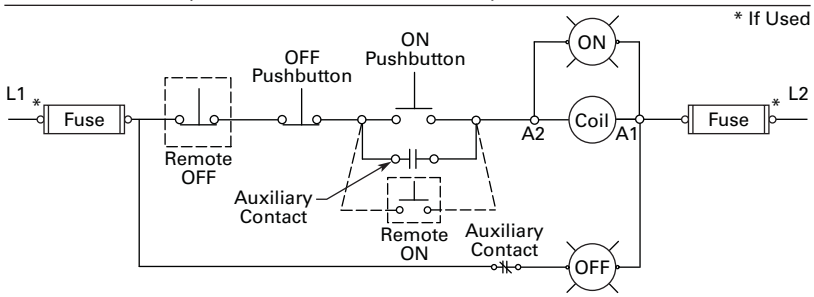

ON and OFF Pushbuttons

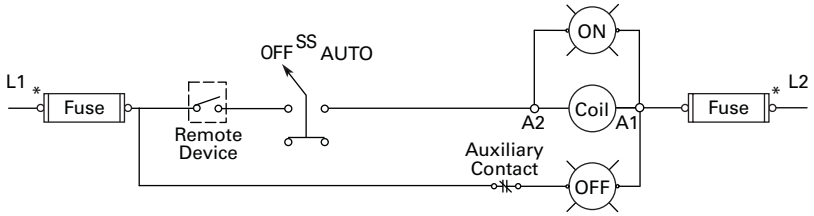

OFF/ON or OFF/AUTO Selector Switch

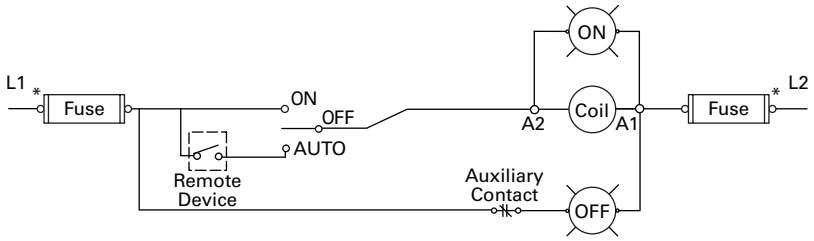

OFF/ON/AUTO or HAND/OFF/AUTO Selector Switch

C30CNM

C30CNM Mechanically Held
Refer to View "A" for 2-/3-Wire Control Options

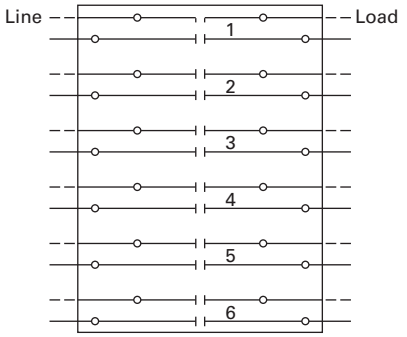

View A

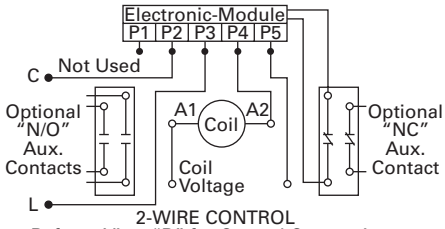

2-WIRE CONTROL
Refer to View "B" for Control Connections

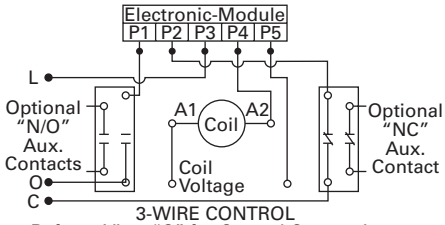

3-WIRE CONTROL
Refer to View "C" for Control Connections

View B
Optional Pilot Devices for 2-Wire Control

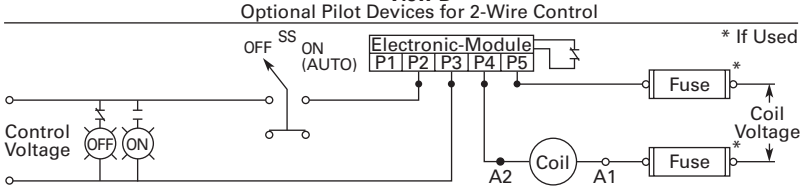

OFF/ON or OFF/AUTO Selector Switch

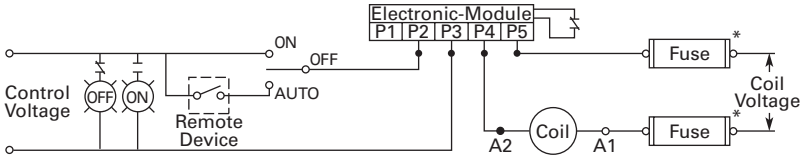

HAND/OFF/AUTO or ON/OFF/AUTO Selector Switch

View C
Optional Pilot Devices for 3-Wire Control

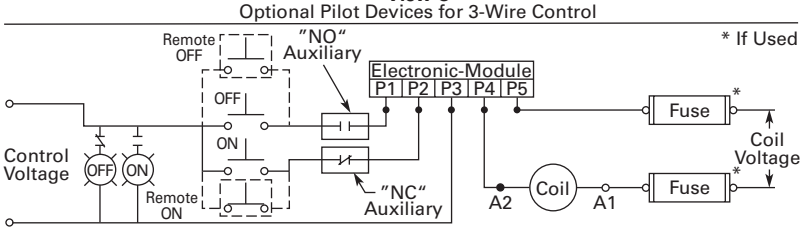

ON & OFF Pushbuttons

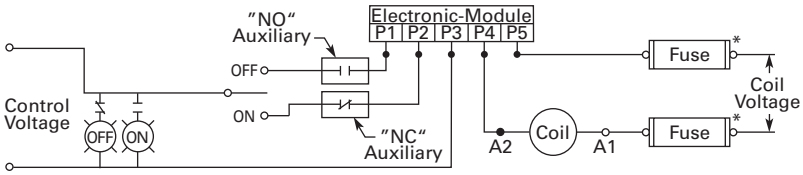

OFF/ON Selector Switch with Spring Return to Center

Dimensions

Approximate Dimensions in Inches (mm)

C30CN

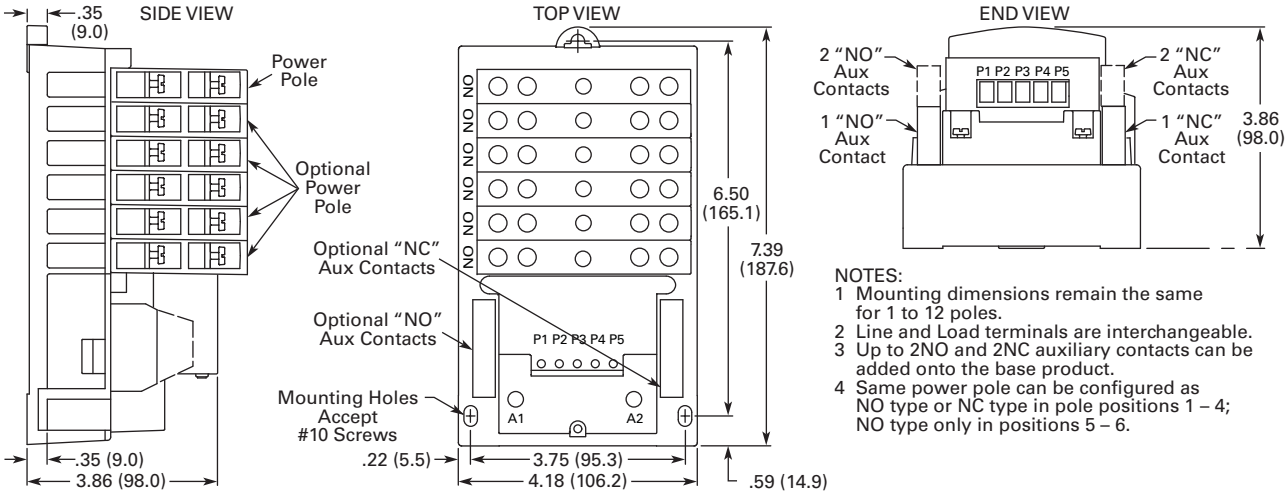

NOTES:
1 Mounting dimensions remain the same for 1 to 12 poles.
2 Line and Load terminals are interchangeable.
3 Up to 2NO and 2NC auxiliary contacts can be added onto the base product.
4 Same power pole can be configured as NO type or NC type in pole positions 1 – 4; NO type only in positions 5 – 6.

CN35 Electrically Held

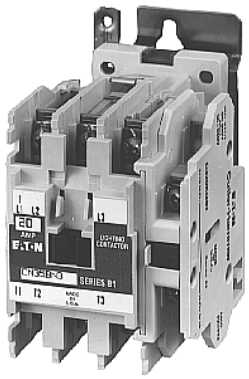

Contents

Description	*Page*
C30CN Mechanically and Electrically Held	**V5-T6-3**
CN35 Electrically Held	
Product Selection	**V5-T6-17**
Accessories	**V5-T6-18**
Renewal Parts	**V5-T6-20**
Dimensions	**V5-T6-21**
A202 Magnetically Latched	**V5-T6-23**

CN35 Electrically Held

Product Description

Type CN35 Electrically Held Lighting Contactors from Eaton's electrical sector are designed to handle the switching of tungsten (incandescent) or ballast (fluorescent and mercury arc) lamp loads as well as other non-motor (resistive) loads.

Application Description

- Ideal applications include industrial plants, stadiums, parks and any new construction requiring lighting control
- Ballast lamps equate to fluorescent, mercury vapor, sodium vapor and quartz loads and will operate at a maximum of 600V
- Filament lamps equate to incandescent, infrared, sodium iodine and heating loads and will operate at a maximum of 480V
- Resistance heating equates to radiant and convection heating, furnace and oven loads

Features

- Designed and tested specifically for lighting and resistive loads
- Easy to install and maintain
- Full line of Freedom snap-on accessories
- Standard with 1NO auxiliary contact (the 10A two- and three-pole ship standard with the auxiliary in the fourth power pole position with no increase in width)
- Top and side mounted auxiliary contacts available for 10–60A devices; side mounted auxiliaries only available on 100A and greater
- Straight-through wiring

Standards and Certifications

- UL File No. E37317, Guide LR353
- CSA File No. LR353

Instructional Leaflets

19225 CN35AN (2-, 3-, 4-Pole)

19227 CN35BN (2-, 3-Pole)

24829 CN35BN (4-, 5-Pole)

24840 CN35BN (6-, 9-, 12-Pole)

19227 CN35DN (2-, 3-Pole)

19229 CN35GN (2-, 3-Pole)

19874 CN35GN (4-, 5-Pole)

20218 CN35KN (2-, 3-Pole)

20171 CN35NN (2-, 3-Pole)

20172 CN35SN (2-, 3-Pole)

20172 CN35TN (2-, 3-Pole)

Product Selection

When Ordering Specify

- Catalog number including the coil suffix code from the Magnet Coil Selection table
- Any required accessories

CN35GN5A

CN35 AC Lighting Contactors—Electrically Held

Maximum Ampere Rating ①	Number of Poles	Open Type Catalog Number ③
10	2	**CN35AN2_B**
	3	**CN35AN3_B**
	4	**CN35AN4_B**
20	2	**CN35BN2_B**
	3	**CN35BN3_B**
	4	**CN35BN4_B**
		CN35BN4AC
	6	**CN35BN6_B**
	9	**CN35BN9_B**
	12	**CN35BN12_B**
30	2	**CN35DN2_B**
	3	**CN35DN3_B**
	4	**CN35DN4_B**
	5	**CN35DN5_B**
	6	**CN35DN6_B**
	9	**CN35DN9_B**
	12	**CN35DN12_B**
60	2	**CN35GN2_B**
	3	**CN35GN3_B**
	4 ②	**CN35GN4_B**
	5 ②	**CN35GN5_B**
100	2	**CN35KN2_**
	3	**CN35KN3_**
200	2	**CN35NN2_**
	3	**CN35NN3_**
300	2	**CN35SN2_**
	3	**CN35SN3_**
400 ④	2	**CN35TN2_**
	3	**CN35TN3_**

Magnet Coil Selection

Coil Voltage and Hertz ⑤	Code Suffix
120/60 or 110/50	**A**
240/60 or 220/50	**B**
480/60 or 440/50	**C**
600/60 or 550/50	**D**
208/60	**E**
277/60	**H**
208–240/60 ⑥	**J**
240/50	**K**
380–415/60	**L**
550/50	**N**
24/60, 24/50 ⑦	**T**
24/50	**U**
32/50	**V**
48/60	**W**
48/50	**Y**

Notes

① The listed ampere ratings are based on a maximum load voltage of 480V for tungsten lamp applications and 600V for ballast or mercury vapor type applications.
② Additional power poles mounted on side(s) of contactor.
③ Underscore (_) indicates missing code letter for magnet coil—see Magnet Coil Selection table.
④ UL ballast and resistive ratings only.
⑤ For **DC Magnet Coils**, see NEMA Contactors and Starters, Tab 2 in this volume.
⑥ For 10, 20 and 30A sizes only. Sizes 60–400A are 24V/60 Hz only.
⑦ For 10, 20 and 30A sizes only.

Accessories

Transient Suppressor Kits

10–60A Contactors

These kits limit high voltage transients produced in the control circuit when power is removed from the contactor or starter coil. There are three separate suppressors for use on 24–120V, 240V or 480V coils respectively.

These devices mount directly to the coil terminals of lighting contactors 10–60A.

C320TS2

Kits for 10–60A

Description	Coil Voltage	Catalog Number
Transient suppressor	24 –120V	**C320TS1**
	240V	**C320TS2**
	480V	**C320TS3**

100–300A Contactors

This device mounts on top of any side mounted auxiliary contact on lighting contactors 100–300A. It connects across coil terminals on any 120V contactor magnet coil.

Limits high voltage transients produced in the circuit when power is removed from the coil.

C320AS1

Kits for 100–300A

Description	Coil Voltage	Catalog Number
Transient suppressor	120V	**C320AS1**

Auxiliary Contacts

CN35 Lighting Contactors include a 1NO maintaining auxiliary contact mounted on right hand side (on 10A, two- and three-pole devices, auxiliary contact occupies 4th power pole position—no increase in width). The 10–60A devices will accept additional auxiliary contacts on the top and/or sides.

Auxiliary contact blocks are designed for snap-on installation—fast, easy installation (no tools required up to 60A). All auxiliary contacts are of the bifurcated design with parallel circuit paths. This redundant path provides very high reliability. Auxiliary contacts can be snapped on the side (up to two circuits—per auxiliary contact) and on the top (up to four circuits). Auxiliary contacts for larger contactors, 100–400A sizes, will accept side mounted auxiliaries only and easily attach to the side of the contactor with two screws.

Side Mounted

Top Mounted

Auxiliary Contacts—10–60A Contactors

Description	Contact Configuration Code ①	Catalog Number
Side Mounted		
1NO	10	**C320KGS1**
1NC	01	**C320KGS2**
1NO-1NC	11	**C320KGS3**
2NO	20	**C320KGS4**
2NC	02	**C320KGS5**
Top Mounted ②		
1NO	10	**C320KGT1**
1NC	01	**C320KGT2**
1NO-1NC	11	**C320KGT3**
2NO	20	**C320KGT4**
2NC	02	**C320KGT5**
3NO	30	**C320KGT9**
2NO-1NC	21	**C320KGT10**
1NO-2NC	12	**C320KGT11**
3NC	03	**C320KGT12**
4NO	40	**C320KGT13**
3NO-1NC	31	**C320KGT14**
2NO-2NC	22	**C320KGT15**
1NO-3NC	13	**C320KGT16**
4NC	04	**C320KGT17**

Notes

① For reference only—not part of catalog number. See **Page V5-T6-19**.

② Cannot be added to contactors or starters mounted in Box 1 (NEMA Type 1).

Auxiliary Contacts—100–400A Contactors

Base Auxiliary Contact—C320KGS42

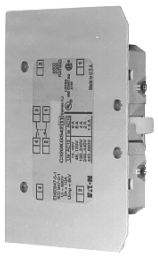

Auxiliary Contact—C320KGS22

Circuit	Contact Configuration Code ①	100A Contactors Catalog Number	200 and 300A Contactors Catalog Number
Base Auxiliary Contacts			
NO	10	**C320KGS31**	**C320KGS41**
NO-NC	11	**C320KGS32**	**C320KGS42**
Auxiliary Contacts			
NO	10	**C320KGS20**	
NC	01	**C320KGS21**	
NO-NC ②	11	**C320KGS22**	

Auxiliary Contact Ratings (Amperes)

Current	AC Volts 120V	240V	480V	600V
NEMA A600				
Make and interrupting	60.0	30.0	15.0	12.0
Break	6.0	3.0	1.5	1.0
Continuous	10.0	10.0	10.0	10.0
NEMA P300				
Continuous thermal rating: 5A				
DC Volts	**Make/Break Amperes**			
125	1.10			
250	0.55			

Contact Configuration Code

This 2-digit code is found on the auxiliary contact to assist in identifying the specific contact configuration. The first digit indicates the quantity of NO contacts and the second indicates the quantity of NC contacts.

Auxiliary Contact Location

Auxiliary Contacts—Mounting Positions

The sketches below illustrate the maximum number of auxiliary contacts that can be assembled to a contactor and their locations in standard enclosures.

Auxiliary Contact Mounting Positions

Size	Poles	Available Mounting Positions ③④⑤ Open Type	NEMA 1	NEMA 3R, 4X, 12
10A	2–4	T1, L1, R1	L1	L1, T1
20–60A	2–3	T1, L1	L1	L1, T1
60A	4	T1, L1	—	L1, T1
60A	5	T1, L1	—	L1, T1
100A	2–3	R2, R3, L1, L2, L3	R2, R3, L1, L2, L3	R2, R3, L1, L2, L3
200A	2–3	R2, R3, L1, L2, L3	R2, R3, L1, L2, L3	R2, R3, L1, L2, L3
300A	2–3	R2, R3, L1, L2, L3	R2, R3, L1, L2, L3	R2, R3, L1, L2, L3
400A	2–3	R2, R3, L1, L2, L3	R2, R3, L1, L2, L3	R2, R3, L1, L2, L3

10–60A Contactors

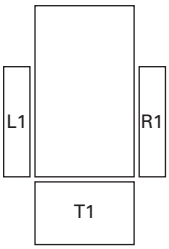

Top View

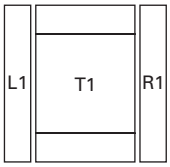

Front View

100–400A Contactors

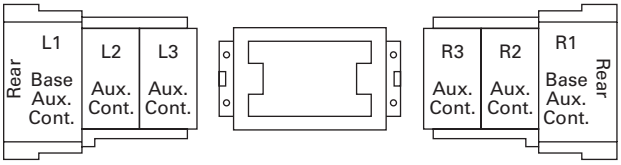

Left Side of Contactor — Front of Contactor — Right Side of Contactor

Notes

① For reference only—not part of catalog number.
② NO-NC occupies two positions—L2 and L3 or R2 and R3.
③ Available positions on contactors or starters other than what is factory installed.
④ When a pneumatic timer is mounted on contactor, only side mounted auxiliary contact positions are available. The solid-state timer, when added, takes up side mounted auxiliary contact position.
⑤ For 100–400A contactors, a base auxiliary contact must be added in position L1 before additional contacts can be mounted.

Pneumatic Timers—Top Mounted

Attachment mounts on top of 10–60A lighting contactors (top mounted auxiliary contacts can not be installed on device when timer is used). Timer unit has DPST timed contacts—circuits in each pole must be the same polarity. Units are convertible from OFF to ON delay or vice-versa.

Pneumatic Timer

Pneumatic Timers

Timing Range	Catalog Number
0.1 to 30 seconds	**C320TP1**
10 to 180 seconds	**C320TP2**

Maximum Ampere Ratings

Description	Volts AC 120	240	480	600
Make	30.0	15.0	7.5	6.0
Break	3.0	1.5	0.75	0.6

Solid-State Timers

Solid-State ON DELAY Timer—Side Mounted on CN35 Freedom Series Lighting Contactors through 60A

This timer is designed to be **wired in SERIES with the load** (typically a coil). When the START button is pushed (power applied to timer), the ON DELAY timing function starts. At the completion of the set timing period, timer and series wired load will both be energized.

Mounted Timer

Mounted Timer

Timing Range	Catalog Number ①②③
0.1–1.0 seconds	**C320TDN1_**
1–30 seconds	**C320TDN30_**
30–300 seconds	**C320TDN300_**
5–30 minutes	**C320TDN3000_**

Renewal Parts

CN35 Lighting Contactors

Description		10A Series C1 Part No.	20A, 30A Series C1 Part No.	60A Series B1 Part No.	100A Part No.	200A Part No.	300A Series B1 Part No.
Contact Kits							
Two-pole		④	④	**6-65-7**	**6-43-5**	**6-44**	**6-45**
Three-pole		④	④	**6-65-8**	**6-43-6**	**6-44-2**	**6-45-2**
Four-pole		④	④	**6-65-15**	—	—	—
Five-pole		④	④	**6-65-16**	—	—	—
Magnet Coils	**Coil Suffix**						
120V 60 Hz or 110V 50 Hz	**A**	**9-2875-1**	**9-2876-1**	**9-2703-1**	**9-2756-1**	**9-1891-1**	**9-1891-1**
240V 60 Hz or 220V 50 Hz	**B**	**9-2875-2**	**9-2876-2**	**9-2703-2**	**9-2756-2**	**9-1891-2**	**9-1891-2**
480V 60 Hz or 440V 50 Hz	**C**	**9-2875-3**	**9-2876-3**	**9-2703-3**	**9-2756-3**	**9-1891-3**	**9-1891-3**
600V 60 Hz or 550V 50 Hz	**D**	**9-2875-4**	**9-2876-4**	**9-2703-4**	**9-2756-4**	**9-1891-4**	**9-1891-4**
208V 60 Hz	**E**	**9-2875-5**	**9-2876-5**	**9-2703-9**	**9-2756-5**	**9-1891-13**	**9-1891-13**
277V 60 Hz	**H**	**9-2875-12**	**9-2876-12**	**9-2703-7**	**9-2756-9**	**9-1891-26**	**9-1891-26**
208/240V 60Hz	**J**	**9-2875-37**	**9-2876-37**	—	—	—	—
240V 50 Hz	**K**	**9-2875-11**	**9-2876-11**	**9-2703-14**	**9-2756-13**	**9-1891-20**	**9-1891-20**
380–415V 50 Hz	**L**	**9-2875-6**	**9-2876-6**	**9-2703-8**	—	—	—
380V 50 Hz	**L**	—	—	—	**9-2756-12**	**9-1891-14**	**9-1891-14**
415V 50 Hz	**M**	—	—	—	**9-2756-8**	**9-1891-21**	**9-1891-21**
550V 50 Hz	**N**	—	—	—	**9-2756-14**	**9-1891-8**	**9-1891-8**
24V 60 Hz–24V 50 Hz	**T**	**9-2875-36**	**9-2876-36**	—	—	—	—
24V 60 Hz	**T**	—	—	**9-2703-6**	**9-2756-6**	**9-1891-15**	**9-1891-15**
24V 50 Hz	**U**	**9-2875-36**	**9-2876-13**	**9-2703-12**	**9-2756-11**	**9-1891-16**	**9-1891-16**
32V 50 Hz	**V**	**9-2875-16**	**9-2876-16**	**9-2703-10**	**9-2756-10**	—	—
48V 60 Hz	**W**	**9-2875-8**	**9-2876-8**	**9-2703-11**	**9-2756-15**	—	—
48V 50 Hz	**Y**	**9-2875-9**	**9-2876-9**	**9-2703-13**	**9-2756-7**	**9-1891-18**	**9-1891-18**

Notes

① Add operating voltage suffix to catalog number. **A** = 120V, **B** = 240V, **E** = 208V
② Rated 0.5A pilot duty—not to be used on larger contactors.
③ Terminal connections are quick connects only. Two per side.
④ Replace with complete contactor.

Dimensions

Approximate Dimensions in Inches (mm)

Open Type—10A, Two- to Four-Pole; 20–30A, Two- to Three-Pole

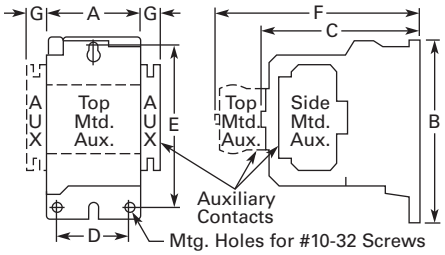

Open Type—20–30A, Four- to Six-Pole

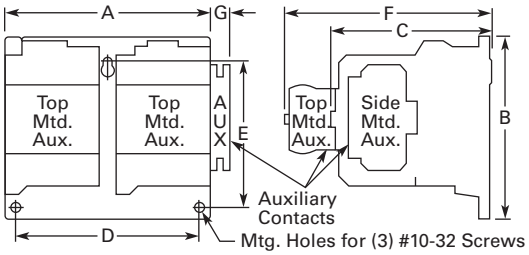

Open Type—20–30A, Nine- to 12-Pole

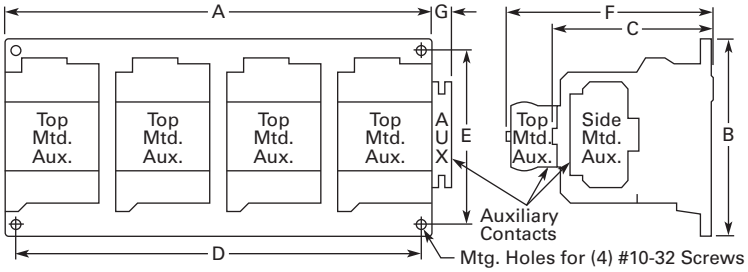

Dimensions and Shipping Weights

Ampere Rating	Number of Poles	Wide A	High B	Deep C	Mounting D ①	E	F	G	Shipping Weight Lbs (kg)
Open Type									
10	2–4	2.00 (50.8)	3.88 (98.6)	3.49 (88.6)	1.50 (38.1)	3.38 (85.9)	4.90 (124.5)	0.54 (13.7)	1.4 (0.6)
20–30	2–3	2.00 (50.8)	3.88 (98.6)	3.49 (88.6)	1.50 (38.1)	3.38 (85.9)	4.90 (124.5)	0.54 (13.7)	1.5 (0.7)
20–30	4–6	4.20 (106.7)	4.35 (110.5)	3.52 (89.4)	3.50 (88.9)	3.86 (98.0)	4.90 (124.5)	0.54 (13.7)	2.9 (1.3)
20–30	9	10.50 (266.7)	5.75 (146.1)	4.52 (114.8)	4.50 (114.3)	5.00 (127.0)	—	—	4.4 (2.0)
20–30	12	10.50 (266.7)	5.75 (146.1)	4.52 (114.8)	4.50 (114.3)	5.00 (127.0)	—	—	5.8 (2.6)
60	2–3	2.56 (65.0)	5.05 (128.3)	4.44 (112.8)	2.00 (50.8)	4.50 (114.3)	5.80 (147.3)	0.54 (13.7)	3.5 (1.6)
60	4	3.46 (87.9)	5.05 (128.3)	4.44 (112.8)	2.00 (50.8)	4.50 (114.3)	5.80 (147.3)	0.54 (13.7)	3.5 (1.6)
60	5	4.36 (110.7)	5.05 (128.3)	4.44 (112.8)	2.00 (50.8)	4.50 (114.3)	5.80 (147.3)	0.54 (13.7)	3.5 (1.6)
100	2–3	3.54 (89.9)	7.17 (182.1)	5.94 (150.9)	3.00 (76.2)	6.63 (168.4)	—	0.54 (13.7)	9.0 (4.1)
200	2–3	7.05 (179.1)	9.11 (231.4)	7.25 (184.2)	6.00 (152.4)	8.50 (215.9)	—	—	20.0 (9.1)
300	2–3	7.05 (179.1)	13.12 (333.2)	7.78 (197.6)	6.00 (152.4)	12.50 (317.5)	—	—	23.0 (10.4)

Note

① Center mounting slot at bottom on 10–30A sizes only.

Approximate Dimensions in Inches (mm)

60A, Two- to Three-Pole

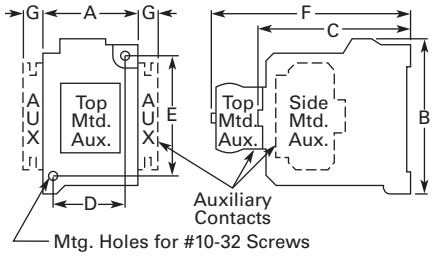

60A, Four-Pole

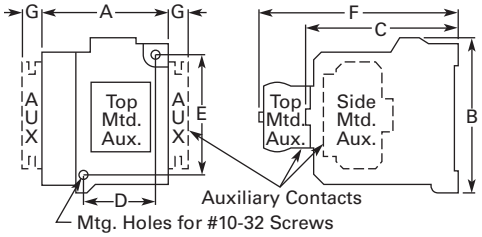

100A, Two- to Three-Pole

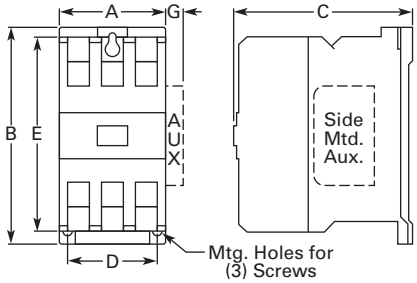

60A, Five-Pole

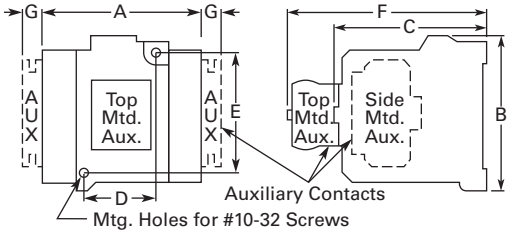

200–300A, Two- to Three-Pole

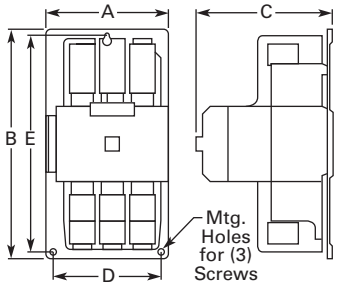

Dimensions and Shipping Weights

Ampere Rating	Number of Poles	Wide A	High B	Deep C	Mounting D ①	E	F	G	Shipping Weight Lbs (kg)
Open Type									
10	2–4	2.00 (50.8)	3.88 (98.6)	3.49 (88.6)	1.50 (38.1)	3.38 (85.9)	4.90 (124.5)	0.54 (13.7)	1.4 (0.6)
20–30	2–3	2.00 (50.8)	3.88 (98.6)	3.49 (88.6)	1.50 (38.1)	3.38 (85.9)	4.90 (124.5)	0.54 (13.7)	1.5 (0.7)
20–30	4–6	4.20 (106.7)	4.35 (110.5)	3.52 (89.4)	3.50 (88.9)	3.86 (98.0)	4.90 (124.5)	0.54 (13.7)	2.9 (1.3)
20–30	9	10.50 (266.7)	5.75 (146.1)	4.52 (114.8)	4.50 (114.3)	5.00 (127.0)	—	—	4.4 (2.0)
20–30	12	10.50 (266.7)	5.75 (146.1)	4.52 (114.8)	4.50 (114.3)	5.00 (127.0)	—	—	5.8 (2.6)
60	2–3	2.56 (65.0)	5.05 (128.3)	4.44 (112.8)	2.00 (50.8)	4.50 (114.3)	5.80 (147.3)	0.54 (13.7)	3.5 (1.6)
60	4	3.46 (87.9)	5.05 (128.3)	4.44 (112.8)	2.00 (50.8)	4.50 (114.3)	5.80 (147.3)	0.54 (13.7)	3.5 (1.6)
60	5	4.36 (110.7)	5.05 (128.3)	4.44 (112.8)	2.00 (50.8)	4.50 (114.3)	5.80 (147.3)	0.54 (13.7)	3.5 (1.6)
100	2–3	3.54 (89.9)	7.17 (182.1)	5.94 (150.9)	3.00 (76.2)	6.63 (168.4)	—	0.54 (13.7)	9.0 (4.1)
200	2–3	7.05 (179.1)	9.11 (231.4)	7.25 (184.2)	6.00 (152.4)	8.50 (215.9)	—	—	20.0 (9.1)
300	2–3	7.05 (179.1)	13.12 (333.2)	7.78 (197.6)	6.00 (152.4)	12.50 (317.5)	—	—	23.0 (10.4)

Note

① Center mounting slot at bottom on 10–30A sizes only.

A202 Mechanically Latched

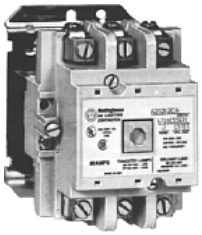

Contents

Description	*Page*
C30CN Mechanically and Electrically Held	**V5-T6-3**
CN35 Electrically Held	**V5-T6-16**
A202 Magnetically Latched	
Product Selection	**V5-T6-24**
Accessories	**V5-T6-24**
Renewal Parts	**V5-T6-25**
Technical Data and Specifications	**V5-T6-26**
Wiring Diagrams	**V5-T6-26**
Dimensions	**V5-T6-27**

A202 Magnetically Latched

Product Description

The A202 Lighting Contactor from Eaton's electrical sector provides a safe and convenient means for local or remote switching of relatively large tungsten, fluorescent or mercury arc lamp loads.

Application Description

- The magnetically latched lighting contactors are designed to withstand the large initial inrush currents of tungsten lamp loads without contact welding
- The A202 contactors are fully rated devices that do not require de-rating similar to standard motor control contactors
- The magnetically latched lighting contactor provides effective control in applications such as office buildings, industrial plants, hospitals, stadiums, airports, and so on

Features

- Designed and tested specifically for lighting and resistive loads
- Easy to install and maintain
- No control power necessary to maintain contact closure

Operation

A permanent magnet is built into the contactor structure that will maintain the contactor in its energized state indefinitely without using control power. When energized, a DC current is applied to the latch coil, producing a magnetic field that reinforces the polarity of the permanent magnet, pulling in the contactor. The coil clearing interlock disconnects the current to the coil. In order to drop out the contactor, it is necessary to apply a field through the STOP coil in the reverse direction to the permanent magnet. This momentarily cancels the magnetic attraction and the contactor drops out.

Standards and Certifications

- UL Listed File No. E44424, Guide NRNT
- CSA Certified File No. LR39402, Class 3231-01

Listed

Instructional Leaflets

IL16965 30A (2-, 3-, 4-, 5-Poles)

IL16966 60–200A (2-, 3-, 4-, 5-Poles)

Product Selection

When Ordering Specify

- Catalog number with coil suffix code from the Magnet Coil Selection table
- Any required accessories

A202K_

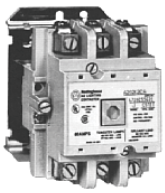

Latched AC Lighting Contactors ①②

Holding Circuit Auxiliary Contact or Pushbutton Station Not Included

Continuous Amperes (Enclosed)	Number of Poles	Open Type Catalog Number ③
30	2	**A202K1B_M**
	3	**A202K1C_M**
	4	**A202K1D_M**
	5	**A202K1E_M**
	6	**A202K1F_M**
	8	**A202K1G_M**
	10	**A202K1H_M**
	12	**A202K1K_M**
60	2	**A202K2B_M**
	3	**A202K2C_M**
	4	**A202K2D_M**
	5	**A202K2E_M**
	6	**A202K2F_M**
	8	**A202K2G_M**
	10	**A202K2H_M**
	12	**A202K2K_M**
100	2	**A202K3B_M**
	3	**A202K3C_M**
	4	**A202K3D_M**
	5	**A202K3E_M**
	6	**A202K3F_M**
	8	**A202K3G_M**
	10	**A202K3H_M**
	12	**A202K3K_M**
200	2	**A202K4B_M**
	3	**A202K4C_M**
	4	**A202K4D_M**
	5	**A202K4E_M**
	6	**A202K4F_M**
	8	**A202K4G_M**
	10	**A202K4H_M**
	12	**A202K4K_M**
300	2	**A202K5B_M**
	3	**A202K5C_M**
400	2	**A202K6B_M**
	3	**A202K6C_M**

Magnet Coil Selection

Coil Voltage	Catalog Number Suffix
120V, 60 Hz	**A**
208V, 60 Hz	**B**
277V, 60 Hz	**Z**
440V/50, 480V/60	**X**
600V, 60 Hz	**E**
120V/60, 110V/50	**A**
220V/50, 240V/60	**W**
24V, 60 Hz	**I** ④

Accessories

See A200 NEMA Contactor Accessories, Tab 2, section 2.2 in this volume.

Notes

① Lighting contactors are not available with DC coils.
② Contactors rated 300A and 400A are mechanically latched.
③ Underscore (_) indicates missing code letter for magnet coil selection—see Magnet Coil Selection table.
④ Available on two- to five-pole, 30 and 60A devices and on two- to three-pole 100 and 200A devices.

Renewal Parts

AC Coil, A202—Magnetically Latched

30A

Voltage	Hz	Two-, Three-, Four-Pole Part Number	Five-Pole Part Number
110/120	50/60	**7874A93G01**	**7874A89G01**
208/240	50/60	**7874A93G02**	**7874A89G02**
277	50/60	**7874A93G03**	**7874A89G03**
440/480	50/60	**7874A93G04**	**7874A89G04**
575	50/60	**7874A93G05**	**7874A89G05**

60A

Voltage	Hz	Two-, Three-Pole Part Number	Four-, Five-Pole Part Number
110/120	50/60	**7874A93G01**	**7874A87G01**
208/240	50/60	**7874A93G02**	**7874A87G02**
277	50/60	**7874A93G03**	**7874A87G03**
440/480	50/60	**7874A93G04**	**7874A87G04**
575	50/60	**7874A93G05**	**7874A87G05**

100 and 200A

Voltage	Hz	Two-, Three-Pole Part Number	Four-, Five-Pole Part Number
110/120	50/60	**7874A85G01**	**7874A83G01**
208/240	50/60	**7874A85G02**	**7874A83G02**
277	50/60	**7874A85G03**	**7874A83G03**
440/480	50/60	**7874A85G04**	**7874A83G04**
550/575	50/60	**7874A85G05**	**7874A83G05**

Terminals (Line and Load)

Two-Pole Part Number	Three-Pole Part Number	Four-Pole Part Number	Five-Pole Part Number
30A			
N/A	N/A	N/A	N/A
60A			
179C755G17	**179C755G16**	**179C755G17** ①	**179C755G16**
			179C755G17 ②
100A			
179C755G19	**179C755G18**	**179C755G19** ①	**179C755G18**
			179C755G19 ②
200A Model K Electrically Held			
179C755G28	**179C755G27**	**179C755G28** ①	**179C755G27**
			179C755G28 ②
200A Model J Magnetically Latched			
179C755G31	**179C755G30**	**179C755G31** ①	**179C755G30**
			179C755G31 ②

Other Accessories

Description	Size	Part Number
Control module (rectifier)	30–200A	**3915B98G01**

Arc boxes, upper base assemblies and cross bars are equivalent to the A201 Series. See Tab 2, section 2.1 in this volume.

Contact kits are equivalent to the A201 Model J series, with the exception of the magnetically latched 200A unit. It uses Catalog Number 672B788G07 for the three-pole device. For other poles, consult factory.

Notes

① Order quantity of two for four-pole design.

② Group members for the five-pole terminal represent the combination of the two- and three-pole number.

Technical Data and Specifications

A202 Contactors

Description	Specification
Terminals	
All except 30A devices	Cu/Al
30A devices	Cu only
Ballast load	600 AC, breaking all lines
Tungsten lamp loads, maximum volts	
Line-to-line	480 Vac
Line-to-neutral	277 Vac

Wiring Diagrams

Standard Wiring

The standard wiring of an A202 contactor can be controlled by a separate customer supplied single-pole double-throw controlling station.

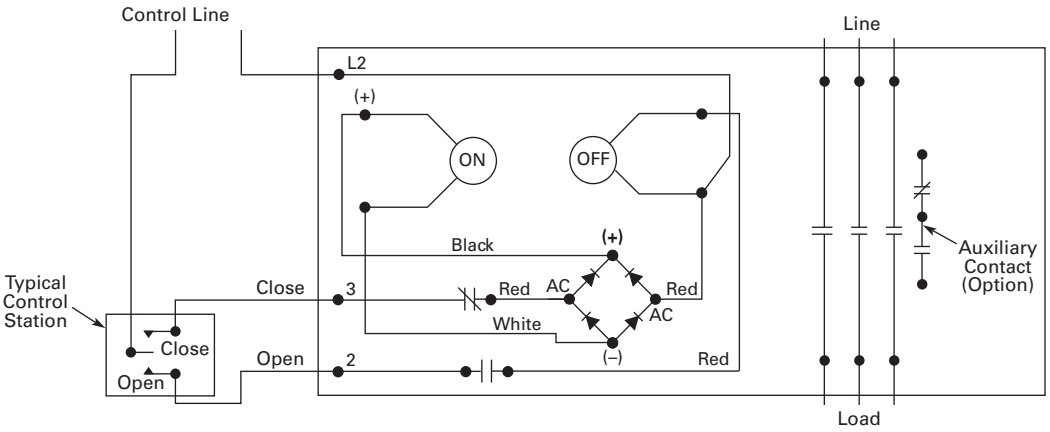

Two-Wire Control

Two-wire control can be accomplished with a customer supplied relay with 1NO/1NC auxiliary contacts, wire as shown.

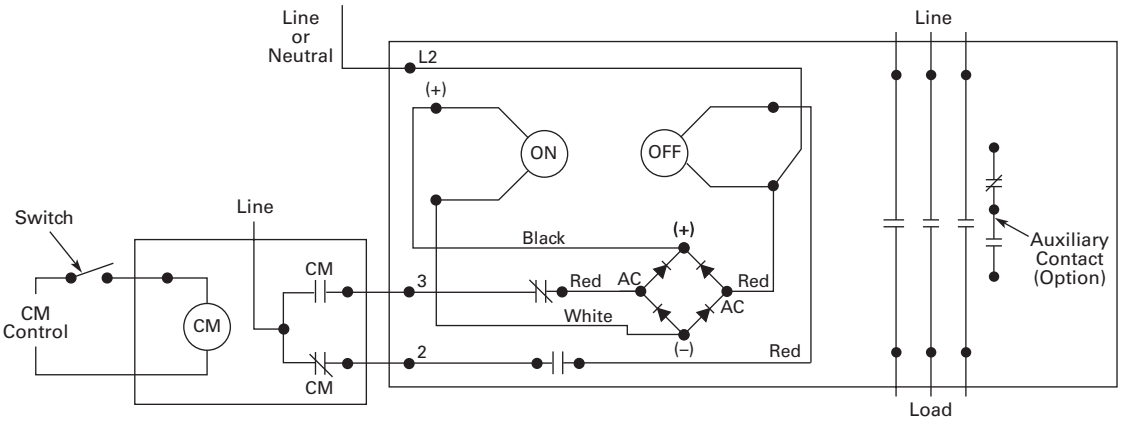

Dimensions

Approximate Dimensions in Inches (mm)

Open Type

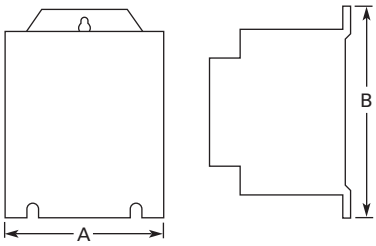

Non-Combination Open Lighting Contactors—Two- to 12-Pole

			Open Type	
Continuous Amperes	**Number of Poles**	**Pole Configuration**	**Wide A**	**High B**
30	2–4	—	3.31 (84.1)	4.38 (111.3)
	5	—	4.19 (106.4)	4.38 (111.3)
	6	3 x 3	7.13 (181.1)	4.46 (113.3)
	8	4 x 4	7.13 (181.1)	4.46 (113.3)
	10	5 x 5	10.63 (270.0)	4.46 (113.3)
	12	4 x 4 x 4	12.38 (314.5)	6.88 (174.8)
60	2, 3	—	3.31 (84.1)	4.38 (111.3)
	4, 5	—	4.19 (106.4)	4.38 (111.3)
	6	3 x 3	7.13 (181.1)	4.46 (113.3)
	8	4 x 4	10.63 (270.0)	4.46 (113.3)
	10	5 x 5	10.63 (270.0)	4.46 (113.3)
	12	5 x 5 x 2	15.00 (381.0)	6.88 (174.8)
100	2, 3	—	4.63 (117.6)	6.63 (168.4)
	4, 5	—	7.25 (184.2)	6.63 (168.4)
	6	3 x 3	9.75 (247.7)	6.88 (174.8)
	8	5 x 3	12.38 (314.5)	6.88 (174.8)
	10	5 x 5	15.00 (381.0)	6.88 (174.8)
	12	5 x 5 x 2	34.13 (866.9)	27.50 (698.5)
200	2, 3	—	4.63 (117.6)	6.63 (168.4)
	4, 5	—	7.25 (184.2)	6.63 (168.4)
	6	3 x 3	9.75 (247.7)	6.88 (174.8)
	8	5 x 3	12.38 (314.5)	6.88 (174.8)
	10	5 x 5	15.00 (381.0)	6.88 (174.8)
	12	5 x 5 x 2	34.13 (866.9)	27.50 (698.5)