E68 Series Integral Sensor Valve

200 Series Zero Pressure Accumulation

Sensor Power Supplies

6.0 Introduction

Product Selection Guide V8-T6-2

6.1 E68 Series Integral Sensor Valve

Product Description V8-T6-3
Product Selection V8-T6-5
Accessories V8-T6-7
Technical Data and Specifications V8-T6-10
Wiring Diagrams V8-T6-11
Dimensions V8-T6-13

6.2 200 Series Zero Pressure Accumulation

Product Description V8-T6-14
Product Selection V8-T6-16
Accessories V8-T6-19
Technical Data and Specifications V8-T6-21
Wiring Diagrams V8-T6-22
Dimensions V8-T6-24

6.3 Sensor Power Supply—NEMA 4 Universal Voltage

Product Description V8-T6-25
Product Selection V8-T6-26
Technical Data and Specifications V8-T6-26
Wiring Diagrams V8-T6-27
Dimensions V8-T6-27

6.4 Sensor Power Supply—NEMA 1, 120 Vac

Product Description V8-T6-28
Product Selection V8-T6-29
Technical Data and Specifications V8-T6-29
Wiring Diagram V8-T6-30
Dimensions V8-T6-30

Unless otherwise noted, the products contained in this section should not be used for functional safety applications. These products were not designed or tested to IEC 60947-5-3 or recommended for functional safety.

Learn Online

For Customer Service in the U.S. call 1-877-ETN CARE (386-2273),
in Canada call 1-800-268-3578.
For Application Assistance in the U.S. and Canada
call 1-800-426-9184.

Product Selection Guide

E68 Integral Sensor Valve

Page V8-T6-3

Overview

A complete Zero Pressure Accumulation (ZPA) sensing and control solution. This system solves the problem of product damage and mishandling caused by mechanical sensor rollers on outdated ZPA conveyors.

Conveyor Systems

Self-contained package includes sensor, logic, air valve, and wiring

Non-contact, true Zero Pressure Accumulation

Multiple algorithms available to provide the exact functionality you require

Multiple wiring options available—including NEMA® 4 and NEMA 1 varieties

Low installation costs

Integrated "beam status" contact available to allow direct integration into AC or DC control systems

One-touch air fittings for quick installation

Low-profile package allows easy integration into conveyor side-channel

System designed with sub-4A 24 Vdc wiring for safety and reduced installation costs

Easily interfaced to external control systems for singulated discharge and/or slug release

Highly optimized, low-cost power supply

Technical Data and Specifications

Operations—Warranted for up to 60 million operations (3 years)

Electrical ratings—
100 mA current switching capacity; 132 Vac/dc maximum switching voltage; 400V isolation; 10 mA maximum off-state leakage; 25W maximum on-state resistance

Enclosure ratings—
NEMA 1 and NEMA 4 (by model)

Approvals

cULus

200 Series Zero Pressure Accumulation

Page V8-T6-14

Overview

A fully engineered non-contact, photoelectric sensor system with built-In accumulation control. This sensor system solves the problem of product damage and mishandling caused by mechanical sensor rollers on outdated ZPA conveyors.

Conveyor Systems

Non-contact, true Zero Pressure Accumulation control without a PLC

Multiple algorithms available to provide the exact functionality you require

Additional gap and compression timing versions available

Low installation costs with pre-measured and connectorized wiring

Fits zone lengths between 18 and 60 inches in 6-inch increments and conveyors up to 60 inches wide

Compatible with commonly available solenoid-operated air valves

Sensors are short circuit protected with automatic reset of sensor when short is removed

System designed with sub-4A 24 Vdc wiring for safety and reduced costs

Easily interfaced to external control systems for singulated discharge and/or slug release

Technical Data and Specifications

Operations—Warranted for up to 60 million operations (3 years)

Electrical ratings—
18 to 30 Vdc, 100 mA current switching capacity; 10 mA maximum off-state leakage; 8 mS response time; NPN or PNP

Enclosure ratings—NEMA 1

Material—Polycarbonate lens, cycoloy and lexan body, glass-filled PCT connector

Approvals

—

Sensor Power Supply—NEMA 4 Universal Voltage

Page V8-T6-25

Overview

Designed to be used with the 200 Series and E68 Series Zero Pressure Accumulation Systems, but is also suitable for use in a wide variety of general material handling applications. The unit delivers 100W output at 27 Vdc and supports easy, Class II wiring

Sensors

Integrated AC junction box features for one-step mounting and wiring without the need for additional accessories or enclosures

Built-in DC power health contact allows easy monitoring of power supply status

Unique design features a tamper-proof sealed construction to reduce the risk of damage associated with conventional open control-panel type supplies

Built-in slug-release input converts an AC or DC input to the appropriate DC signal for integration with the 200 Series and E68 Series Zero Pressure Accumulation Systems

Dual output connection terminals to make it easy and convenient to locate the power supply at the center of the cable run

Technical Data and Specifications

Electrical ratings—100 to 250 Vac operating voltage; 27 Vdc, 100 watt output; 15–132 Vac/dc 3 mA minimum slug input; PNP or NPN, switch selectable

Enclosure ratings—NEMA 4X

Material—Aluminum

Approvals

cULus Class 2

Sensor Power Supply—NEMA 1 120 Vac

Page V8-T6-28

Overview

Designed to be used with the 200 Series and E68 Series Zero Pressure Accumulation Systems, but is also suitable for use in a wide variety of general material handling applications. The unit delivers 100W output at 27 Vdc and supports easy, Class II wiring

Sensors

Integrated AC junction box for one-step mounting and wiring without the need for additional accessories

Built-in DC power health contact allows easy monitoring of power supply status

Unitized design features a tamper-proof encapsulated construction to reduce the risk of damage associated with conventional open control-panel type construction

Built-in slug-release input converts an AC or DC input to the appropriate DC signal for integration with the 200 Series and E68 Series Zero Pressure Accumulation Systems

Dual output connection terminals to make it easy and convenient to locate the power supply at the center of the cable run

Technical Data and Specifications

Electrical ratings—
105 to 132 Vac operating voltage; 27 Vdc, 100 watt output; 15–132 Vac/dc 3 mA minimum slug input; PNP or NPN, switch selectable

Enclosure ratings:—NEMA 1

Material—Die-cast aluminum

Approvals

UL® Listed
cUL® Approved

E68 Series Integral Sensor Valve

Contents

Description	*Page*
E68 Series Integral Sensor Valve	
Product Overview	**V8-T6-4**
Product Selection	
Basic Logic Sensors	**V8-T6-5**
Progressive Logic Sensors	**V8-T6-6**
Accessories	**V8-T6-7**
Technical Data and Specifications	**V8-T6-10**
Excess Gain	**V8-T6-11**
Wiring Diagrams	**V8-T6-11**
Dimensions	**V8-T6-13**

E68 Series Integral Sensor Valve

Product Description

The E68 Series Integral Sensor Valve (ISV) from Eaton's electrical sector is a complete Zero Pressure Accumulation (ZPA) sensing and control solution. This system solves the problem of product damage and mishandling caused by mechanical sensor rollers on outdated ZPA conveyors.

A Complete, Pre-Engineered Solution

The ISV comes complete with all needed components including sensors, air valves, pre-measured connectors, power supplies and accessories. These components simply snap together to provide reliable conveyor control without the need to invest costly engineering time. The compact power supply, designed specifically for our ZPA products, includes an integral junction box to eliminate additional mounting enclosures.

Fast, Low Cost Installation and Retrofit

The unique ISV reduces installation costs by integrating the sensor, valve and control logic into one device. Only one device needs to be installed to provide a full zone's worth of control. Connections between zones are also included, eliminating the need to run any additional wiring. Wiring is optimized for an exact fit, eliminating unsightly cable loops that could be snagged and damaged.

Features

- Self-contained package includes sensor, logic, air valve, and wiring
- Non-contact, true Zero Pressure Accumulation
- Multiple algorithms available to provide the exact functionality you require
- Multiple wiring options available—including NEMA 4 and NEMA 1 varieties
- Low installation costs
- Integrated "beam status" contact available to allow direct integration into AC or DC control systems
- One-touch air fittings for quick installation
- Low-profile package allows easy integration into conveyor side-channel
- System designed with sub-4A 24 Vdc wiring for safety and reduced installation costs
- Easily interfaced to external control systems for singulated discharge and/or slug release
- Highly optimized, low-cost power supply
- Custom brackets and sensor/bracket assemblies available

Standards and Certifications

- cULus

DANGER

THIS SENSOR IS NOT A SAFETY DEVICE AND IS NOT INTENDED TO BE USED AS A SAFETY DEVICE. This sensor is designed only to detect and read certain data in an electronic manner and perform no use apart from that, specifically no safety-related use. This sensor product does not include self-checking redundant circuitry, and the failure of this sensor product could cause either an energized or de-energized output condition, which could result in death, serious bodily injury, or property damage.

For the most current information on this product, visit our Web site: www.eaton.com

For Customer Service in the U.S. call 1-877-ETN CARE (386-2273), in Canada call 1-800-268-3578.
For Application Assistance in the U.S. and Canada call 1-800-426-9184.

Product Overview

High Reliability and Flexibility

ISV sensors are available in both polarized reflex and diffuse reflective sensing modes. Polarized sensors eliminate detection errors caused by shiny targets and provide the highest level of high sensing reliability when used at common conveyor widths.

Diffuse reflective models can be installed in low lift-height locations and other areas on the conveyor where it may not be possible to mount a polarized reflex sensor and reflector. These models have an extremely narrow field of view to allow for mounting below the level of the conveyor rollers in certain cases where necessary.

Choose a Sensor to Meet Your Specific Needs

To provide an ideal solution for a wide variety of Zero Pressure Accumulation needs, ISV sensors are available in two different embedded logic modes:

- The Basic Logic Series offers high-throughput smart Zero Pressure Accumulation control. This logic results in singulation and Zero Pressure Accumulation. Each sensor checks the status of the downstream zone and each zone always runs except when both the current and downstream zones are full
- The Progressive Logic Series offers even higher throughput than the Basic Logic. This logic does not singulate product, but does result in Zero Pressure Accumulation. Each zone always runs until all of the zones downstream are full, allowing maximum efficiency.

E68 Series System Components

Sensor

The ISV sensor has been specially designed with upstream communication abilities and internal logic to implement Zero Pressure Accumulation (ZPA) control. When combined with the following components, a complete ZPA conveyor control system can be literally snapped into place on your conveyor. Two versions are available depending upon the control you require: Basic Logic and Progressive Logic (described on this page).

Sensor with Integrated Beam Status Output

These ISV Sensors are the same as standard units in all respects, with the exception of a special output connector that is added to the sensor body. This allows you to conveniently access the beam status output of any zone by simply substituting a special sensor of this type in place of a standard unit. This is useful, for example, at the infeed end of a section of conveyor where a lane full signal is required, as a separate photo-eye need not be mounted.

Power Supply

A 4A Power Supply designed for use with the Conveyor Sensor systems. A single power supply can normally operate up to 50 zones. For more information, see **Page V8-T6-28**.

Power Supply Cable

This cable allows the power supply to be connected to any zone, while allowing use of that zone.

Release Cable

This cable is normally connected to the last zone and is tied to your external control to allow release of product from the conveyor system. The system can be wired to the power supply to enable either singulated product release or slug/train release from the conveyor's discharge end.

Buss Harness (Not required with Daisy-chained models)

The Buss Harness distributes power, slug release signals and provides communications links for Multi-drop versions of the ISV. Made from flat ribbon cable, it is available in 10, 50 and 100 ft lengths and is connectorized at intervals to match your zone length (18 to 60 inches in 6 inch increments). A buss link accessory can be used to join multiple sections together, while a zone jumper accessory may be used to skip unused zones. This harness is only required for Multi-drop connection versions of the ISV (described on this page).

It's So Easy to Get Started, All That's Needed Is …

- Your conveyor zone length(s)
- Preferred ZPA algorithm
- Preferred connection style (see below)

Daisy-chained connection with NEMA 4 sealed micro-connectors

Daisy-chained connection with NEMA 1 unsealed connectors

Product Selection

Basic Logic Sensors

Polarized Reflex ①

	Sensing Range	Optimum Range	Field of View	Connection Type	Operate Mode ②	Option	Standard Catalog Number
E68-SVSPR3-B_	10 ft (3m)	0.1 to 8 ft (0.03 to 3.6m)	3 in (76 mm) diameter at 12 ft (3.6m)	Daisy-chain—NEMA 1	Air to drive	—	**E68-SVSPR3-BLC**
						Isolated beam output	**E68-SVSPR3-BLC-B**
					Air to brake	—	**E68-SVSPR3-BDC**
						Isolated beam output	**E68-SVSPR3-BDC-B**
E68-SVSPR3-B_	10 ft (3m)	0.1 to 8 ft (0.03 to 3.6m)	3 in (76 mm) diameter at 12 ft (3.6m)	Daisy-chain—NEMA 4	Air to drive	—	**E68-SVSPR3-BLP**
						Isolated beam output	**E68-SVSPR3-BLP-B**
					Air to brake	—	**E68-SVSPR3-BDP**
						Isolated beam output	**E68-SVSPR3-BDP-B**

Diffuse Reflective ③

	Sensing Range	Optimum Range	Field of View	Connection Type	Operate Mode ②	Option	Standard Catalog Number
E68-SVSSD1-B_	3 ft (1m)	0.2 to 2 ft (0.06 to 0.6m)	0.2 in (5 mm) diameter at 2 in (51 mm) 6 in (152 mm) diameter at 5 ft (1.5m)	Daisy-chain—NEMA 1	Air to drive	—	**E68-SVSSD1-BLC**
						Isolated beam output	**E68-SVSSD1-BLC-B**
					Air to brake	—	**E68-SVSSD1-BDC**
						Isolated beam output	**E68-SVSSD1-BDC-B**
E68-SVSSD1-B_	3 ft (1m)	0.2 to 2 ft (0.06 to 0.6m)	0.2 in (5 mm) diameter at 2 in (51 mm) 6 in (152 mm) diameter at 5 ft (1.5m)	Daisy-chain—NEMA 4	Air to drive	—	**E68-SVSSD1-BLP**
						Isolated beam output	**E68-SVSSD1-BLP-B**
					Air to brake	—	**E68-SVSSD1-BDP**
						Isolated beam output	**E68-SVSSD1-BDP-B**

Notes

① Ranges based on a 3 in diameter retroreflector.

② "Air to drive" refers to a conveyor system where air pressure must be supplied to air cylinders to cause the conveyor to run. "Air to brake" is just the opposite where air pressure must be supplied to air cylinders to cause the conveyor to stop.

③ Sensors will detect a 90% reflectance white card at this range.

Progressive Logic Sensors

Polarized Reflex ①

	Sensing Range	Optimum Range	Field of View	Connection Type	Operate Mode ②	Option	Standard Catalog Number
E68-SVSPR3-P_	10 ft (3m)	0.1 to 8 ft (0.03 to 3.6m)	3 in (76 mm) diameter at 12 ft (3.6m)	Daisy-chain—NEMA 1	Air to drive	—	**E68-SVSPR3-PLC**
						Isolated beam output	**E68-SVSPR3-PLC-B**
					Air to brake	—	**E68-SVSPR3-PDC**
						Isolated beam output	**E68-SVSPR3-PDC-B**
E68-SVSPR3-P_	10 ft (3m)	0.1 to 8 ft (0.03 to 3.6m)	3 in (76 mm) diameter at 12 ft (3.6m)	Daisy-chain—NEMA 4	Air to drive	—	**E68-SVSPR3-PLP**
						Isolated beam output	**E68-SVSPR3-PLP-B**
					Air to brake	—	**E68-SVSPR3-PDP**
						Isolated beam output	**E68-SVSPR3-PDP-B**

Diffuse Reflective ③

	Sensing Range	Optimum Range	Field of View	Connection Type	Operate Mode ②	Option	Standard Catalog Number
E68-SVSSD1-P_	3 ft (1m)	0.2 to 2 ft (0.06 to 0.6m)	0.2 in (5 mm) diameter at 2 in (51mm) 6 in (152 mm) diameter at 5 ft (1.5m)	Daisy-chain—NEMA 1	Air to drive	—	**E68-SVSSD1-PLC**
						Isolated beam output	**E68-SVSSD1-PLC-B**
					Air to brake	—	**E68-SVSSD1-PDC**
						Isolated beam output	**E68-SVSSD1-PDC-B**
E68-SVSSD1-P_	3 ft (1m)	0.2 to 2 ft (0.06 to 0.6m)	0.2 in (5 mm) diameter at 2 in (51mm) 6 in (152 mm) diameter at 5 ft (1.5m)	Daisy-chain—NEMA 4	Air to drive	—	**E68-SVSSD1-PLP**
						Isolated beam output	**E68-SVSSD1-PLP-B**
					Air to brake	—	**E68-SVSSD1-PDP**
						Isolated beam output	**E68-SVSSD1-PD**

Notes

① Ranges based on a 3 in diameter retroreflector.

② "Air to drive" refers to a conveyor system where air pressure must be supplied to air cylinders to cause the conveyor to run. "Air to brake" is just the opposite where air pressure must be supplied to air cylinders to cause the conveyor to stop.

③ Sensors will detect a 90% reflectance white card at this range.

Accessories

Cables

Sensor Output Cables

	Length	Description	Used with Sensors	Catalog Number
Beam Status Output Cable				
	1m	Wires from the beam status output connector on the sensor to a remote PLC or other controller	**E68….-xyz-B**	**E68-SVABEAM-1**

Power Supply Cables

	Length	Description	Used with Sensors	Catalog Number
Power Supply "T" Connection				
	2m	This cable allows the power supply to be connected between any two zones, while allowing use of those zones. For best results, the power supply cable should be connected at the center of the zones being powered. Tinned leads on power supply end.	**E68….-xyC**	**E68-SVAPWR-C2**
			E68….-xyP	**E68-SVAPWR-P02**
		12 mm DC-key connector on power supply end.	**E68….-xyP**	**E68-SVAPWR-P2**
Power Supply Cable				
	2m	This cable allows the power supply to be connected to any zone, while allowing use of that zone. For best results, the power supply cable should be connected at the center of the zones being powered.	**E68….-xy**	**BUS266PWR-01B1**
	50m		**E68….-xy**	**BUS266PWR-5001B1**
Power Supply				
	—	27 Vdc, 100W; short-circuit, overload and overvoltage protection (cycle power to reset). Power supply can normally power up to 50 ISV zones. See **PG.05.06.T.E** for more details.	**E68….**	**PS256A-01B1**

Release Cables

	Length	Description	Used with Sensors	Catalog Number
E68-SVAREL2-_				
	2m	This cable is connected to the last zone and allows singulate or slug discharge control from an external system. Both release and power connections are provided. If the power connections are used, a separate power supply "T" cable is not needed.	**E68….-xyC**	**E68-SVAREL2-C2**
			E68….-xyP	**E68-SVAREL2-P2**
BUS266REL-01B1				
	2m	This cable is connected to the last zone and allows singulate or slug discharge control from an external system. Release connections only are provided.	**E68….-xy**	**BUS266REL-01B1**
BUS266REL-01B1				
	2m	This cable is connected to the last zone and allows singulate or slug discharge control from an external system. Both release and power connections are provided. If the power connections are used, a separate power supply cable is not needed.	**E68….-xy**	**BUS266REL-02B1**

Zone Extensions and Jumpers

Zone Extension Cable

	Length	Description	Used with Sensors	Catalog Number
E68-SVAEXT-C1	1m	Used for zone lengths >36 in	**E68….-xyC**	**E68-SVAEXT-C1**
E68-SVAEXT-P1			**E68….-xyP**	**E68-SVAEXT-P1**

Power Jumper

	Length	Description	Used with Sensors	Catalog Number
E68-SVAJMP1-C5	5m	Used to slave an asynchronous ZPA chain—does not pass accumulation signals.	**E68….-xyC**	**E68-SVAJMP1-C5**
E68-SVAJMP1-P5			**E68….-xyP**	**E68-SVAJMP1-P5**

Power Isolation Cable

	Length	Description	Used with Sensors	Catalog Number
E68-SVAISO-C	2 ft (0.6m)	Used to isolate parallel power supplies on an extended ZPA chain.	**E68….-xyC**	**E68-SVAISO-C**
E68-SVAISO-P			**E68….-xyP**	**E68-SVAISO-P**

Zone Jumper

	Length	Description	Used with Sensors	Catalog Number
QDJU266A-01B1	5 in	A zone jumper is required when a zone is skipped to allow communications to continue through the unused zone.	**E68….-xy**	**QDJU266A-01B1**

Slug Isolation Cable

	Length	Description	Used with Sensors	Catalog Number
E68-SVASLUG-C	2 ft (0.6m)	Used to break a slug release signal to affect closer control of product release. Insert between any two zones, and a slug release signal is isolated from all upstream zones.	**E68….-xyC**	**E68-SVASLUG-C**
E68-SVASLUG-P			**E68….-xyP**	**E68-SVASLUG-P**

Buss Link Cable

	Length	Description	Used with Sensors	Catalog Number
BUS266LINK-01B1	10 cm	This cable allows two sections of buss harness to be connected together. ① Passes power and ZPA signals.	E68….-xy	BUS266LINK-01B1
BUS266ISO-01B1		Power isolation version. Passes ZPA signals but isolates power.	E68….-xy	BUS266ISO-01B1
BUS266JUMP15_	3m	This cable allows two sections of buss harness to be connected together. DC power is passed through the connection. Passes power only.	E68….-xy	BUS266JUMP15-01B1
		This cable allows two sections of buss harness to be connected together. Both DC power and the ZPA signal is passed through the connection. Passes power and ZPA signals.	E68….-xy	BUS266JUMP15-02B1

Power Curve Delay Module

1451BS_

Length	Description	Used with Sensors	Catalog Number
—	Allows ZPA through a powered curve that is not divided into ZPA controlled zones. Installed adjacent to the sensor at the powered curve infeed. All required wiring is included.	E68…-xy	1451BSR1216
		E68…-xyC	1451BSC1216
		E68…-xyP	1451BSP1216

Connector Covers

Upstream Connector Cover

E68-SVAUSC-P

Description	Used with Sensors	Catalog Number
Used to seal the upstream micro-connector on the most infeed sensor.	E68….-xyP	E68-SVAUSC-P

Downstream Connector Cover

E68-SVADSC-P

Description	Used with Sensors	Catalog Number
Used to seal the downstream micro-connector on the discharge sensor (if a release cable is not connected).	E68….-xyP	E68-SVADSC-P

Mounting Brackets

Mounting Bracket

6161AS0285

Description	Used with Sensors	Catalog Number
Mounting bracket for E68 sensor family. Can be used to mount E68 sensor to conveyor side channel. Can also be used to mount 3 in retroreflector (6200A-6506).	E68….	6161AS0285

Dimensions, see **Page V8-T6-13**.

Note

① 10 ft versions of buss harness have this connector built-in.

Technical Data and Specifications

E68 Series Integral Sensor Valve

Description	Specification
Input voltage	18–30 Vdc
Power dissipation	1.35W at 27 Vdc
Indicator LED	Red LED: Lights steady when air valve open
Response time	25 ms maximum to 90% air flow. 18.2 Hz maximum operation
Air to drive/Air to brake operation	Specified by catalog number
Beam status output (optional)	Solid-state relay; 400V isolation; 132 Vac/dc maximum switching voltage; 100 mA current switching capacity; 10 mA maximum off-state leakage; 25W maximum on-state resistance. Output protected (current limited) for loads less than 32V. ①
Temperature range	Operating: 14° to 131°F (–10° to 55°C); Storage: –13° to 158°F (–25° to 70°C)
Material of construction	Lens: polycarbonate; cable jacket: polyvinylchloride; body: structural polyurethane foam; muffler: brass; fittings: brass, polybutylene terephthalate, polyacetel, BUNA-N; label overlay: polyester. ②
Mounting	Mount with two #8 fasteners (not included). Torque to between 12 and 14 in-lbs
Connectors	Multi-drop models: Insulation-displacement connectors, factory installed Daisy-chain NEMA 1 models (unsealed): 4-pin AMP DESC Connector Daisy-chain NEMA 4 models (sealed): 4-pin, DC-key micro-connectors Beam status output: 3-pin male nano-connector
Vibration and shock	Vibration: 30g over 10 Hz to 2 kHz; shock: 100g for 3 ms 1/2 sine wave pulse
Sunlight immunity	10,000 ft-candles
Enclosure ratings	Multi-drop and unsealed Daisy-chain models: NEMA 1 only Sealed Daisy-chain models: NEMA 1, 4 ③
Operations	100 million operations over 5 years. Warranty: 3 years (maximum 60 million operations)
Valve type	Three-way, vent to atmosphere
Valve specifications	Cv = 0.03; 0 to 75 psi operation ④
Valve fittings	1/4 in "one-touch" fittings. ⑤
Product packaging	Sensors are bulk packaged. Maximum 10 sensors per bag.

Optical Performance

All optical specifications are guaranteed to be the minimum performance under clean conditions of any product delivered from stock. Typical performance may be higher.

Dirt in the environment will affect optical performance by reducing the amount of light the control receives.

For best results, sensors should be used at distances where excess gain is higher than 1.5 (1.5 times the amount of sensing power required to detect an object under ideal conditions). Higher excess gain will allow the sensor to overcome higher levels of contamination on the lens.

Polarized Reflex

Description	Specification
Source	Visible red, 680 nm
Maximum range	10 ft
Optimum range	0.1 to 8 ft
Field of view	3 in dia. at 12 ft

Diffuse Reflective

Description	Specification
Source	Infrared
Maximum Range	3 ft
Optimum Range	3 in to 2 ft
Field of View	0.2 in dia. at 2 in; 6 in dia. at 5 ft

Notes

① Output will reset automatically when short is removed (there is no visual indication of a short-circuit condition).
② Do not expose to concentrated acids, alcohols or ketones.
③ These products conform to NEMA tests as indicated, however, some severe washdown applications can exceed these NEMA test specifications.
④ Dry or lubricated shop air, filtered to less than 5 micrometers required.
⑤ Fittings must be tightened to 10.6–17.7 in-lbs.

Excess Gain

Polarized Reflex (3 in diameter retroreflector)

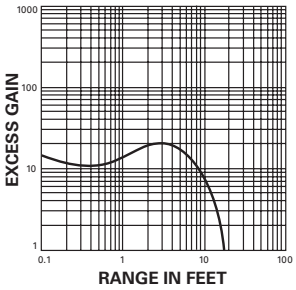

Diffuse Reflective (90% reflectance white card)

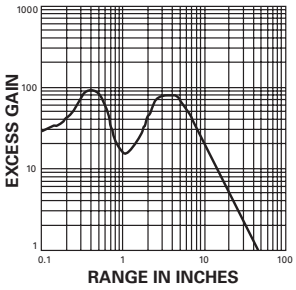

Wiring Diagrams

E68 Series Integral Sensor Valve

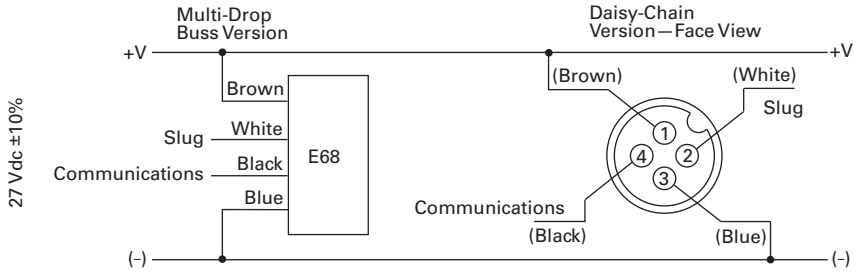

Typical "Daisy-Chain" Wiring Example—Center Tap Arrangement

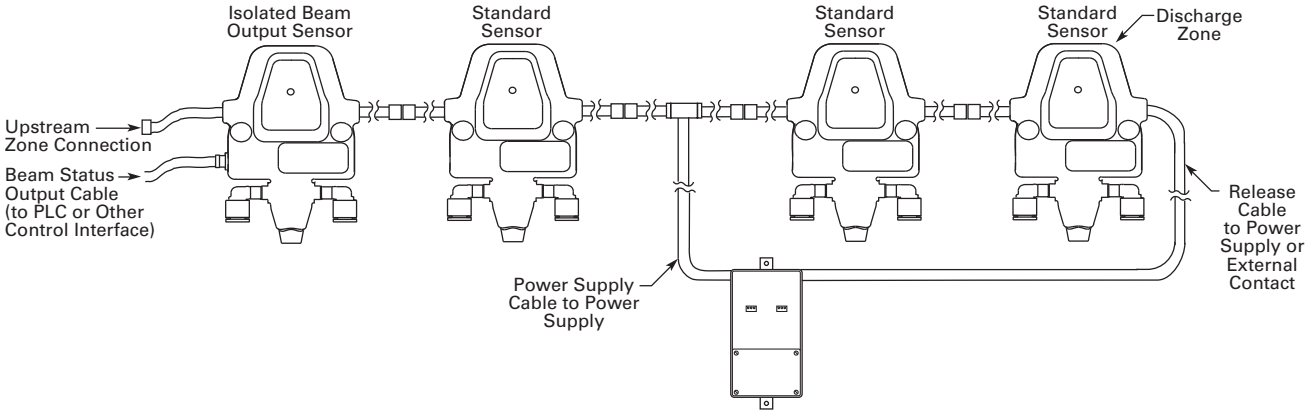

Typical "Daisy-Chain" Wiring Example—End Tap Arrangement

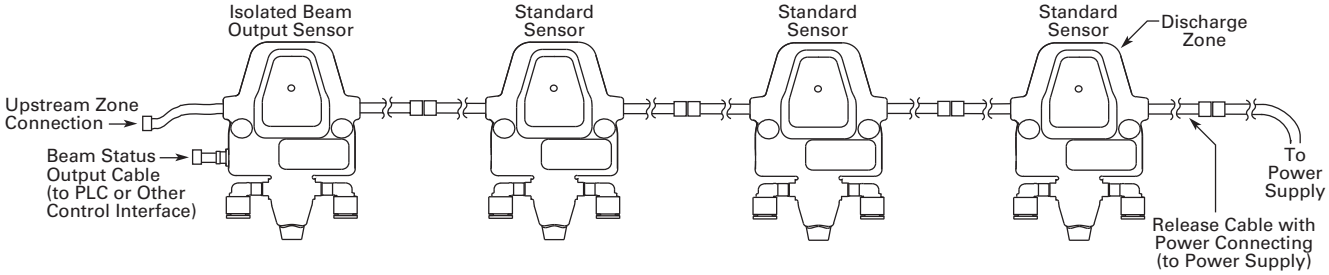

Dimensions

Approximate Dimensions in Inches (mm)

E68 Series Integral Sensor Valve ①

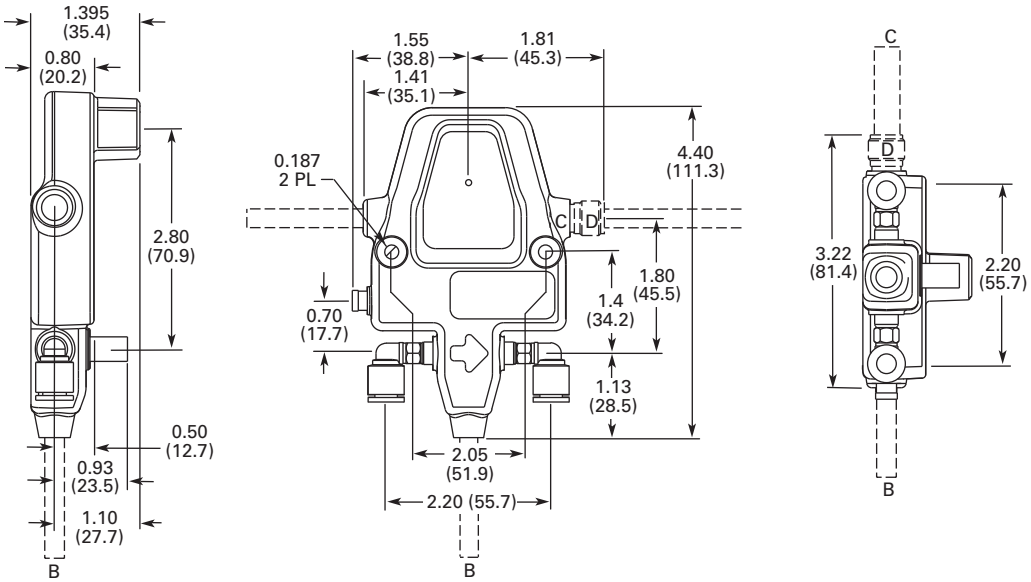

Mounting Bracket

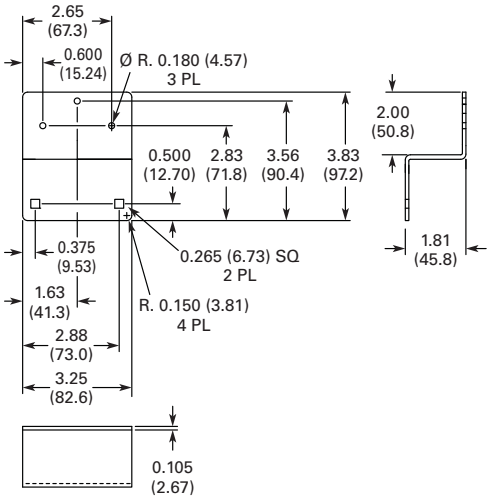

Note

① Above dimension diagrams display the following three models of the E68:
A + D = Daisy-chain NEMA 4 sealed;
A + C = Daisy-chain NEMA 1 unsealed;
B = Multi-drop buss harness

200 Series Zero Pressure Accumulation

Contents

Description	*Page*
200 Series Zero Pressure Accumulation	
Product Overview	**V8-T6-15**
Product Selection	
Basic and Progressive Logic Sensors	**V8-T6-16**
Standard Sensors	**V8-T6-18**
Accessories	**V8-T6-19**
Technical Data and Specifications	**V8-T6-21**
Excessive Gain	**V8-T6-22**
Wiring Diagrams	**V8-T6-22**
Dimensions	**V8-T6-24**

200 Series Zero Pressure Accumulation

Product Description

The 200 Series by Eaton's electrical sector is an easy to use Zero Pressure Accumulation (ZPA) sensing and control solution. This sensor system solves the problem of product damage and mishandling caused by mechanical sensor rollers on outdated ZPA conveyors.

A Complete, Pre-Engineered Solution

The 200 Series comes complete with all needed components including sensors, pre-measured cables, power supplies, and accessories. These components simply snap together to provide reliable Zero Pressure Accumulation conveyor control without the need to invest costly engineering time in a PLC-based system. The compact power supply, designed specifically for the 200 Series, includes an integral junction box to eliminate additional mounting enclosures.

Features

- Non-contact, true Zero Pressure Accumulation control without a PLC
- Multiple algorithms available to provide the exact functionality you require
- Additional gap and compression timing versions available
- Low installation costs with pre-measured and connectorized wiring
- Fits zone lengths between 18 and 60 inches in 6 inch increments and conveyors up to 60 inches wide
- Compatible with commonly available solenoid-operated air valves
- Sensors are short circuit protected with automatic reset of sensor when short is removed
- System designed with sub-4A 24 Vdc wiring for safety and reduced costs
- Easily interfaced to external control systems for singulated discharge and/or slug release
- Highly optimized, low-cost power supply
- Custom brackets and sensor/bracket assemblies available

Standards and Certifications

- Contact factory for latest list of agency approvals

DANGER

THIS SENSOR IS NOT A SAFETY DEVICE AND IS NOT INTENDED TO BE USED AS A SAFETY DEVICE. This sensor is designed only to detect and read certain data in an electronic manner and perform no use apart from that, specifically no safety-related use. This sensor product does not include self-checking redundant circuitry, and the failure of this sensor product could cause either an energized or de-energized output condition, which could result in death, serious bodily injury, or property damage.

For the most current information on this product, visit our Web site: www.eaton.com

For Customer Service in the U.S. call 1-877-ETN CARE (386-2273), in Canada call 1-800-268-3578.
For Application Assistance in the U.S. and Canada call 1-800-426-9184.

Product Overview

Fast, Low Cost Installation and Retrofit

The unique 200 Series reduces installation costs by eliminating measuring, wire stripping and attachment of custom connectors. The main buss cable has connectors pre-installed at points to match your conveyor zone length. Zone length can be from 18 to 60 inches in 6 inch increments. Custom wiring harnesses are supplied for an exact fit-between the main buss cable, the solenoid, and the sensor to eliminate unsightly cable loops that might otherwise be snagged and damaged.

High Reliability

200 Series sensors operate in the polarized reflex sensing mode. Polarized sensors eliminate detection errors caused by shiny targets. The sensor's 10 ft maximum range provides high sensing reliability when used at common conveyor widths.

Choose a Sensor to Meet Your Specific Needs

To provide an ideal solution for a wide variety of zero-pressure accumulation needs, 200 Series sensors are available in two different embedded logic modes:

- The Basic Logic Series offers high-throughput smart Zero Pressure Accumulation control. This logic results in singulation and Zero Pressure Accumulation. Each sensor checks the status of the downstream zone and each zone always runs except when both the current and downstream zones are full. Models are available in either Zone Full Delay Timer or Zone Empty Timer configurations
- The Progressive Logic Series offers even higher throughput than the Basic Logic. This logic does not singulate product, but does result in Zero Pressure Accumulation. Each zone always runs until all of the zones downstream are full, allowing maximum efficiency. Models are available in either Zone Full Delay Timer or Zone Empty Timer configurations

Sensor

The 200 Series sensor has been specially designed with upstream communication abilities and internal logic to implement true zero pressure accumulation control.
When combined with the components below, a complete ZPA conveyor control system can be literally snapped into place on your conveyor. Two versions are available depending upon the control you require: Basic Logic and Progressive Logic (described on this page).

Sensor with Additional Time Delay

These 200 Series sensors are the same as standard units in all respects, with the exception of additional time delay circuitry designed to afford you enhanced zero pressure accumulation control. Versions with a "Gap Timer" offer you an adjustable delay to insert additional gaps between adjacent products as they move down the conveyor (beyond those gaps normally present due to the operation of the built-in true zero pressure accumulation logic). Versions with a "Compression Timer" offer you an adjustable delay to compress packages together during the accumulation process.

Sensor Harness

The sensor harness connects the sensor to the buss harness and solenoid ①. This is the only custom part of the system—the length is optimized for an exact fit on your conveyor to eliminate cable loops that could otherwise be damaged.

Buss Harness

The buss harness distributes power, slug release signals and provides communications links. Made from flat ribbon cable, it is available in 10, 50 and 100 ft lengths and is connectorized at intervals to match your zone length (18 to 60 inches in 6 inch increments).

It's So Easy to Get Started, All That's Needed Is:

- Your conveyor zone length(s)
- Preferred ZPA algorithm
- Sensor harness cable lengths:
  - Distance from sensor to power buss harness
  - Distance from sensor to solenoid
- Solenoid valve manufacturer and model number

Note

① A customer-supplied solenoid/valve is required at each zone to control the conveyor pneumatics. Eaton recommends a solenoid below 1.8 Watts.

Product Selection

Basic and Progressive Logic Sensors

Basic Logic Sensor

Basic Logic Sensors

Logic	Type	Sensing Range	Optimum Range	Field of View	Additional Timing	Operate Mode	Output	Standard Catalog Number
Basic logic	Polarized reflex	10 ft (3m)	0.1 to 8 ft (0.03 to 3.6 m)	3 in (76 mm) diameter at 12 ft (3.6m)	—	Air to drive	NPN	**14266RLN17B1**
							PNP	**14266RLP17B1**
						Air to brake	NPN	**14266RDN17B1**
							PNP	**14266RDP17B1**
Basic logic with timing	Polarized reflex	10 ft (3m)	0.1 to 8 ft (0.03 to 3.6 m)	3 in (76 mm) diameter at 12 ft (3.6m)	Compression timer	Air to drive	NPN	**14266RLNT17B1**
							PNP	**14266RLPT17B1**
						Air to brake	NPN	**14266RDNT17B1**
					Gap timer ①	Air to drive	PNP	**14266RLPC17B1**
						Air to brake ①	PNP	**14266RDPC17B1**

Progressive Logic Sensor

Progressive Logic Sensors

Logic	Type	Sensing Range	Optimum Range	Field of View	Additional Timing	Operate Mode	Output	Standard Catalog Number
Progressive logic	Polarized reflex	10 ft (3m)	0.1 to 8 ft (0.03 to 3.6 m)	3 in (76 mm) diameter at 12 ft (3.6m)	—	Air to drive	NPN	**14286RLN17B1**
							PNP	**14286RLP17B1**
						Air to brake	NPN	**14286RDN17B1**
							PNP	**14286RDP17B1**
Progressive logic with timing	Polarized reflex	10 ft (3m)	0.1 to 8 ft (0.03 to 3.6 m)	3 in (76 mm) diameter at 12 ft (3.6m)	Compression timer	Air to drive	NPN	**14286RLNT17B1**
							PNP	**14286RLPT17B1**
						Air to brake	PNP	**14286RDPT17B1**
					Gap timer	Air to drive	PNP	**14286RLPC17B1**
						Air to brake	PNP	**14286RDPC17B1**

Sensor Harness

Sensor Harnesses

Solenoid Connector②	Sensor to Buss Harness Length	Sensor to Solenoid Length	Used with Sensors	Catalog Number
3-pin AMP P/N 104257-2	12 in	12 in	**14266_/14286_**	**QD266A12-1201B1**
				QD266A12-1204B1
3-pin SMC P/N AXT661-12A	24 in	24 in		**QD266A24-2404B1**
	36 in	36 in		**QD266A36-3604B1**

Notes

① Models only available in PNP versions. To implement this timing functionality and retain access to slug release mode, all sensors in a given ZPA chain must be PNP output versions.

② If you require a solenoid connector other than those listed in this section, contact Eaton's Sensor Applications Department at 1-800-426-9184 with the valve manufacturer's name and model number.

10 ft Versions

50 and 100 ft Versions

Buss Harnesses

Zone Length	Nominal Length	Number of Zones	Used with Sensors	Catalog Number
18 in	10 ft (1.8m)	6 zones	**14266_/14286_**	**BUS266A18-6**
	50 ft (3.6m)	33 zones		**BUS266A18-33**
	100 ft (6.1m)	66 zones		**BUS266A18-66**
24 in	10 ft (1.8m)	5 zones		**BUS266A24-5**
	50 ft (3.6m)	25 zones		**BUS266A24-25**
	100 ft (6.1m)	50 zones		**BUS266A24-50**
30 in	10 ft (1.8m)	4 zones		**BUS266A30-4**
	50 ft (3.6m)	20 zones		**BUS266A30-20**
	100 ft (6.1m)	40 zones		**BUS266A30-40**
36 in	10 ft (1.8m)	3 zones		**BUS266A36-3**
	50 ft (3.6m)	16 zones		**BUS266A36-16**
	100 ft (6.1m)	33 zones		**BUS266A36-33**
40 in	10 ft (1.8m)	3 zones		**BUS266A40-3**
	50 ft (3.6m)	15 zones		**BUS266A40-15**
	100 ft (6.1m)	30 zones		**BUS266A40-30**
42 in	10 ft (1.8m)	2 zones		**BUS266A42-2**
	50 ft (3.6m)	14 zones		**BUS266A42-14**
	100 ft (6.1m)	28 zones		**BUS266A42-28**
48 in	10 ft (1.8m)	2 zones		**BUS266A48-2**
	50 ft (3.6m)	12 zones		**BUS266A48-12**
	100 ft (6.1m)	25 zones		**BUS266A48-25**
54 in	10 ft (1.8m)	2 zones		**BUS266A54-2**
	50 ft (3.6m)	11 zones		**BUS266A54-11**
	100 ft (6.1m)	22 zones		**BUS266A54-22**
60 in	10 ft (1.8m)	2 zones		**BUS266A60-10**
	50 ft (3.6m)	10 zones		**BUS266A60-2**
	100 ft (6.1m)	20 zones		**BUS266A60-20**

Standard Sensors

The standard sensors in this section are similar to the embedded logic sensors in the previous sections except that the units do not contain on-board ZPA logic, the sensors directly actuate the solenoid valves to which they are connected.

Standard Sensor

Standard Sensors

Type	Sensing Range	Optimum Range	Field of View	Connection Type	Operate Mode	Output	Standard Catalog Number
Polarized reflex	10 ft (3m)	0.1 to 8 ft (0.03 to 3.6 m)	3 in (76 mm) diameter at 12 ft (3.6m)	Multi-drop	Air to drive	NPN	**14256RLN17B1**
						PNP	**14256RLP17B1**
					Air to brake	NPN	**14256RDN17B1**
						PNP	**14256RDP17B1**
					Air to drive	Dual NPN and PNP	**14256RL17B1**
					Air to brake		**14256RD17B1**

Sensor Harness

Sensor Harnesses

Solenoid Connector①	Sensor to Buss Harness Length	Sensor to Solenoid Length	Used with Sensors	Catalog Number
3-pin AMP P/N 104257-2	12 in	12 in	**14256_**	**QD256A12-1201B1**
3-pin SMC P/N AXT661-12A				**QD256A12-1204B1**

Buss Harness

Buss Harnesses

Zone Length	Nominal Length	Number of Zones	Used with Sensors	Catalog Number
18 in	50 ft (3.6m)	33 zones	**14266_/14286._**	**BUS256A18-33**
	100 ft (6.1m)	66 zones		**BUS256A18-66**
24 in	50 ft (3.6m)	25 zones		**BUS256A24–25**
	100 ft (6.1m)	50 zones		**BUS256A24-50**
30 in	50 ft (3.6m)	20 zones		**BUS256A30-20**
	100 ft (6.1m)	40 zones		**BUS256A30-40**
36 in	50 ft (3.6m)	16 zones		**BUS256A36-16**
	100 ft (6.1m)	33 zones		**BUS256A36-33**
40 in	50 ft (3.6m)	15 zones		**BUS256A40-15**
	100 ft (6.1m)	30 zones		**BUS256A40-30**
42 in	50 ft (3.6m)	14 zones		**BUS256A42-14**
	100 ft (6.1m)	28 zones		**BUS256A42-28**
48 in	50 ft (3.6m)	12 zones		**BUS256A48-12**
	100 ft (6.1m)	25 zones		**BUS256A48–25**
54 in	50 ft (3.6m)	11 zones		**BUS256A54-11**
	100 ft (6.1m)	22 zones		**BUS256A54-22**
60 in	50 ft (3.6m)	10 zones		**BUS256A60-10**
	100 ft (6.1m)	20 zones		**BUS256A60-20**

Note

① If you require a solenoid connector other than those listed in this section, contact Eaton's Sensor Applications Department at 1-800-426-9184 with the valve manufacturer's name and model number.

Accessories

Basic and Progressive Logic Sensors

Cables, Zone Jumpers and Power Supplies

	Description	Length	Notes	Catalog Number
Singulate Release Cable	**Singulate Release Cable**			
	This cable is connected to the last zone and allows singulate or slug discharge control from an external system.	2m	Release only	**BUS266REL-01B1**
			Both release and power connections are provided. If the power connection is used, a power supply cable is not needed	**BUS266REL-02B1**
Zone Jumper	**Zone Jumper**			
	A zone jumper is required when a zone is skipped to allow communications to continue through the unused zone.	5 in	—	**QDJU266A-01B1**
Power Supply	**Power Supply**			
	A 100W power supply designed for use with the 200 Series system. On systems with zone lengths up to 48 in, it will power up to 110 sensors with 0.67W solenoids (74 if the solenoids are 1.2W; 38 if the solenoids are 2.4W).	—	—	**PS256A-01B1** ①
				PS256A-04B1 ①
Power Supply Cable	**Power Supply Cable**			
	This cable allows the power supply to be connected to any zone, while allowing use of that zone. For best results, the power supply cable should be connected at the center of the zones being powered.	2m	—	**BUS266PWR-01B1**
		50 ft	—	**BUS266PWR-5001B1**
BUS266LINK-01B1	**Buss Link Cable**			
	This cable allows two sections of buss harness to be connected together. NOTE: 10 ft versions of buss harness have this connector built-in.	10 cm	Passes power and ZPA signals	**BUS266LINK-01B1**
BUS266ISO-01B1		10 cm	Power isolation version. Passes ZPA signals but isolates power. This allows for connection of more than one power supply to a long section of ZPA conveyor.	**BUS266ISO-01B1**
BUS266JUMP15_	This cable allows two sections of buss harness to be connected together. DC power is passed through the connection.	3m	Passes power only	**BUS266JUMP15-01B1**
	This cable allows two sections of buss harness to be connected together. Both DC power and the ZPA signal is passed through the connection.	3m	Passes power and ZPA signals	**BUS266JUMP15-02B1**
Power Curve Module	**Power Curve Module**			
	Allows ZPA through a powered curve that is not divided into ZPA controlled zones. All required wiring is included.	—	Install adjacent to the 200 Series sensor at the powered curve infeed. All required wiring included.	**1451BSR1216**

Note

① See **Page V8-T6-28** for more details.

Standard Sensors

Cables

	Description	Length	Notes	Catalog Number
BUS256PWR-01B1	**Power Supply Cable**			
	This cable allows the power supply to be connected to any zone, while allowing use of that zone. for best results, the power supply cable should be connected at the center of the zones being powered.	2m	Round cable	**BUS256PWR-01B1**
BUS256PWR20-02B1		6.7m	Round cable, 18 AWG conductors	**BUS256PWR20-02B1**
BUS256PWR120		3.3m	Flat ribbon cable	**BUS256PWR120**
BUS266LINK-01B1	**Buss Link Cable**			
	This cable allows two sections of buss harness to be connected together.	10 cm	Passes power only	**BUS256LINK-01B1**
BUS266ISO-01B1		10 cm	Power isolation version. Passes ZPA signals but isolates power. This allows for connection of more than one power supply to a long section of ZPA conveyor.	**BUS256ISO-01B1**
BUSJUMP36		54 in	Flat ribbon cable—passes power only	**BUSJUMP36**

Note

① See **Page V8-T6-28** for more details.

Technical Data and Specifications

Basic and Progressive Logic Sensors

14266 and 14286 Models

Description	Specification
Input voltage	18 to 30 Vdc, reverse polarity protected
Power dissipation	250 mW maximum
Output type	NPN or PNP
Current switching capacity	100 mA maximum
OFF-state leakage	10 mA maximum
ON-state voltage drop	2.5V at 100 mA
Slug input	NPN: Integral diode isolates slug input; input is protected against mis-wiring and is active from "0" to a voltage level equal to the current "input voltage" minus 6 volts PNP: Integral diode isolates slug input; input is protected against mis-wiring and is active from 1–30 Vdc
Response time	8 ms
Connector	5-pin, works with mating plug AMP #104257-4; 2-pin, works with mating plug AMP #104257-1
Temperature range	Operating: –25° to 55°C (–13° to 131°F) Storage: –25° to 70°C (–13° to 158°F)
Material of construction	Lens: Polycarbonate; body: Cycoloy and Lexan; connector: glass-filled PCT
Vibration and shock	Vibration: 30g over 10 Hz to 2 kHz; shock: 30g for 10 ms 1/2 sinewave pulse
Enclosure ratings	NEMA 1
Cable-pull strength	20 pounds (static)
Short-circuit protection	The output is protected against dead shorts only. Operation: Output is continuously retried at 3 ms intervals and will automatically reset when short is removed (no visual indication of a short-circuit condition). ①
Indicator LED	Lights steady when output is ON; OFF when output is OFF; OFF when output is in short-circuit mode

Standard Sensors

14256 Models

Description	Specification
Input voltage	10 to 30 Vdc, reverse polarity protected
Power dissipation	120 mW maximum
Output type	NPN only or NPN and PNP dual output
Output operation–air to brake	ON when beam is blocked; OFF when beam is not blocked
Output operation–air to drive	ON when beam is not blocked; OFF when beam is blocked
Current switching capacity	100 mA maximum
OFF-state leakage	10 mA maximum
ON-state voltage drop	2.5V at 100 mA
Slug Input	Integral diode isolates slug input; input is protected against mis-wiring and is active from "0" to a voltage level equal to the current "input voltage" minus 6 volts
Response time	8 mS
Connector	Works with mating plug; AMP #104257-4
Temperature range	Operating: –25° to 55°C (–13° to 131°F) Storage: –25° to 70°C (–13° to 158°F)
Material of construction	Lens: Polycarbonate; body: Cycoloy and Lexan; connector: glass-filled PCT
Vibration and shock	Vibration: 30g over 10 Hz to 2 kHz; shock: 30g for 10 ms 1/2 sinewave pulse
Enclosure ratings	NEMA 1
Cable-pull strength	20 pounds (static)
Short-circuit protection	The output is protected against dead shorts on the NPN output only. Operation: output is continuously retried at 3 ms intervals and will automatically reset when short is removed (no visual indication of a short-circuit condition). ①
Indicator LED	Lights steady when output is ON; OFF when output is OFF; OFF when output is in short-circuit mode

Note

① **CAUTION:** Will not protect against overloads between 100–300 mA.

Optical Performance

Basic, Progressive Logic and Standard Sensors

All optical specifications are guaranteed to be the minimum performance under clean conditions of any product delivered from stock. Typical performance may be higher.

Dirt in the environment will affect optical performance by reducing the amount of light the control receives. For best results, sensors should be used at distances where excess gain is higher than 1.5 (1.5 times the amount of sensing power required to detect an object under ideal conditions). Higher excess gain will allow the sensor to overcome higher levels of contamination on the lens. All ranges and excess gain graphs are based on a 3 in retroreflector.

Basic, Progressive Logic and Standard Sensors

Description	Specification
Source	Visible red, 680 nm
Maximum range	10 ft
Optimum rang	0.1 to 8 ft
Field of view	3 in dia. at 12 ft

Excessive Gain

Basic, Progressive Logic and Standard Sensors

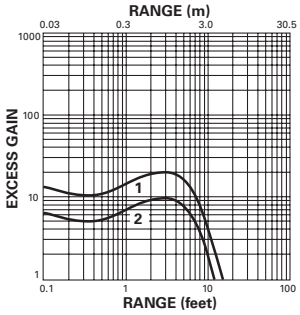

Performance measured to 3 in retroreflector.

1. Typical performance
2. Minimum performance

Wiring Diagrams

Basic and Progressive Logic Sensors

Sensors

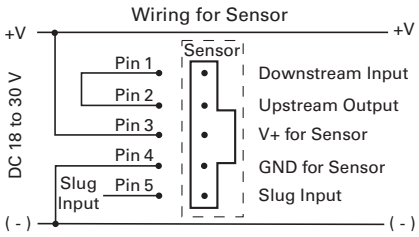

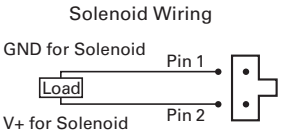

Typical Wiring Example—Nominal 10 ft Buss Harness Lengths

Example shows Power Buss Harness (BUS266A48-2) mounted to a conveyor with 4 ft zones / 8 ft bed sections.

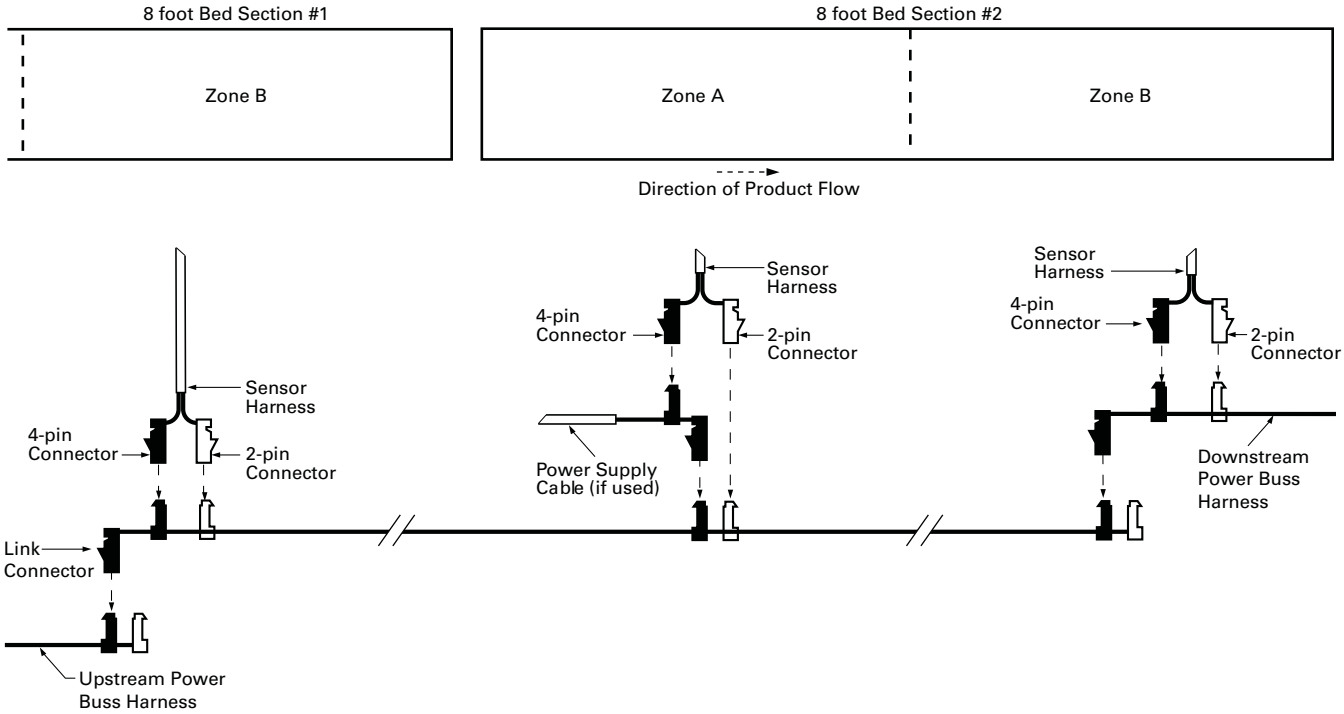

Typical Wiring Example—Nominal 50 ft and 100 ft Buss Harness Lengths

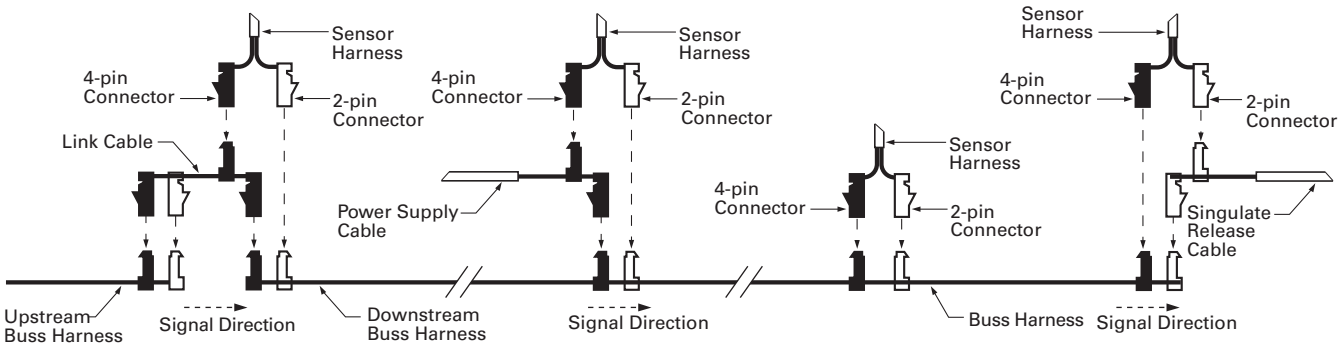

Standard Sensors

Sensors

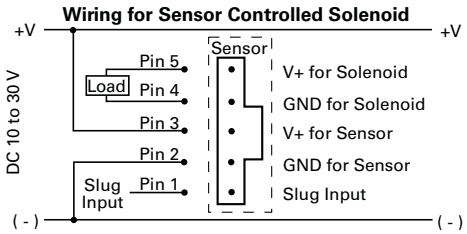

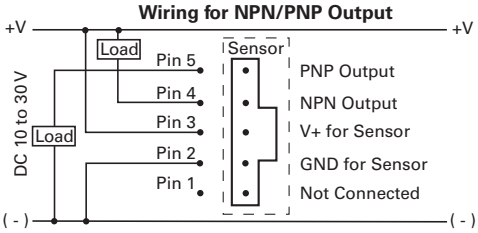

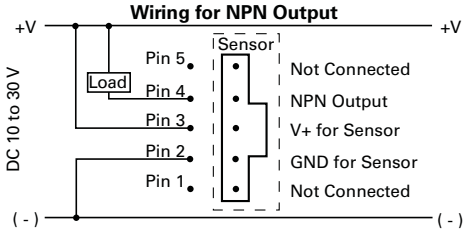

Typical Wiring Example

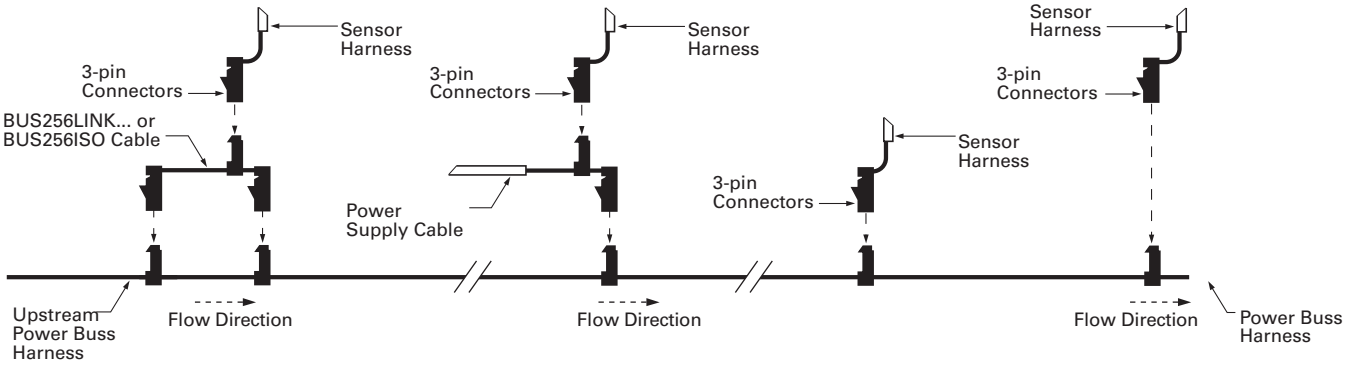

Dimensions

Approximate Dimensions in Inches (mm)

Basic and Progressive Logic Sensors

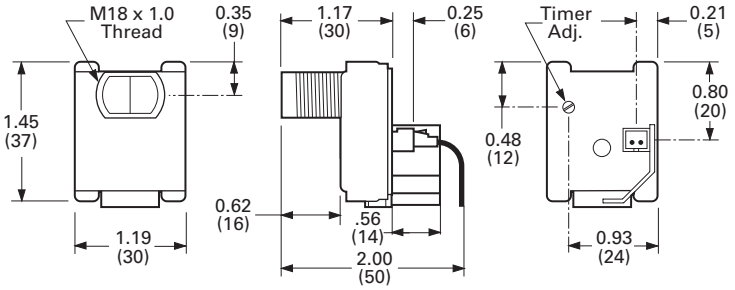

Standard Sensors

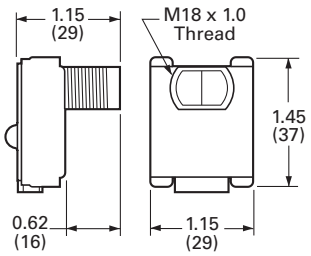

Sensor Power Supply—NEMA 4 Universal Voltage

Contents

Description	*Page*
Sensor Power Supply—NEMA 4 Universal Voltage	
Product Selection	**V8-T6-26**
Technical Data and Specifications	**V8-T6-26**
Wiring Diagrams	**V8-T6-27**
Dimensions	**V8-T6-27**

Sensor Power Supply—NEMA 4 Universal Voltage

Product Description

The Sensor Power Supply by Eaton's electrical sector was specially designed to be used with the 200 Series and E68 Series Zero Pressure Accumulation Systems, but is also suitable for use in a wide variety of general material handling applications. The unit delivers 100W output at 27 Vdc and supports easy, Class II wiring. The power supply is a tamper-proof, rugged component easily mounted to a conveyor side-channel or support. Internal components are fully protected in a sealed metal housing to stand up to rugged application, ensuring flawless performance in any material handling environment.

Features

- Integrated AC junction box features for one-step mounting and wiring without the need for additional accessories or enclosures
- Built-in DC power health contact allows easy monitoring of power supply status
- Unique design features a tamper-proof sealed construction to reduce the risk of damage associated with conventional open control-panel type supplies
- Built-in slug-release input converts an AC or DC input to the appropriate DC signal for integration with the 200 Series and E68 Series Zero Pressure Accumulation Systems
- Dual output connection terminals to make it easy and convenient to locate the power supply at the center of the cable run

Standards and Certifications

- cULus Class 2

DANGER

THIS SENSOR IS NOT A SAFETY DEVICE AND IS NOT INTENDED TO BE USED AS A SAFETY DEVICE. This sensor is designed only to detect and read certain data in an electronic manner and perform no use apart from that, specifically no safety-related use. This sensor product does not include self-checking redundant circuitry, and the failure of this sensor product could cause either an energized or de-energized output condition, which could result in death, serious bodily injury, or property damage.

For the most current information on this product, visit our Web site: www.eaton.com

For Customer Service in the U.S. call 1-877-ETN CARE (386-2273), in Canada call 1-800-268-3578.
For Application Assistance in the U.S. and Canada call 1-800-426-9184.

Product Selection

NEMA 4 Universal Voltage

Sensor Power Supply—NEMA 4 Universal Voltage

Operating Voltage	Output	Slug Input	Type	Slug Output	Catalog Number
100–250 Vac	27 Vdc, 100W; short circuit, overload and overvoltage protection (cycle power to reset)	15–132 Vac/dc 3 mA minimum	Standard For use with 200 series and E68 systems	Sinking or sourcing, switch selectable; 80 mA maximum; short circuit protection for loads less than 32 Vac or Vdc (auto reset)	**PS256B-01B1**
			High current slug For use with solenoid valve systems requiring full current slug signals 4-pin DC M12 output connector	Sinking only; 100W output; short circuit, overload and overvoltage protection (cycle power to reset) ①	**PS256B-05B1**

6

Technical Data and Specifications

Sensor Power Supply—NEMA 4 Universal Voltage

Description	PS256B-01B1	PS256B-05B1
Input power	115W, maximum inrush 30A from cold start	115W, maximum inrush 30A from cold start
Input voltage	100–250 Vac	100–250 Vac
Input current (full load)	115 Vac: 2A; 230 Vac: 4A	115 Vac: 2A; 230 Vac: 4A
Output power	100W	100W
Output voltage	27 Vdc	27 Vdc
Output protection	Short circuit, overload and overvoltage protection (auto-reset)	Short circuit, overload and overvoltage protection (auto-reset)
Regulation	±3%	±3%
Slug input	15–132 Vac/dc	15–132 Vac/dc
Slug output	Sinking or sourcing, switch selectable; 80 mA maximum; short circuit protection for loads less than 32 Vac or Vdc (auto reset)	Sinking only; 100W output; short circuit, overload and overvoltage protection (cycle power to reset) ①
Indicators	Red LED: AC in; green LED: DC out	Red LED: AC in; green LED: DC out
DC power monitor output	NO contact, solid-state relay, 80 mA maximum	NO contact, solid-state relay, 80 mA maximum
Temperature range	–13° to 131°F (–25° to 55°C)	–13° to 131°F (–25° to 55°C)
Vibration	IEC 68-2-6 Test FC 10g	IEC 68-2-6 Test FC 10g
Enclosure material	Aluminum	Aluminum
Enclosure rating	NEMA 4X	NEMA 4X
Connections		
DC	Main output/slug output: One 6-position plug-in style connector ②	Main output/slug output: One 6-position plug-in style connector ②
AC	AC line input, DC fail indication and slug input: One 7-position plug-in style connector ③	AC line input, DC fail indication and slug input: One 7-position plug-in style connector ③

Notes

① Total output power of supply is 100W. Total supply output power (100W) = main output power + slug output power.

② On model PS256B-05B1, a single 12 mm DC key micro-connector is mounted to the outside of the enclosure and pre-wired to the internal connector (see above).

③ On model PS256B-02B1, DC fail indication and slug input terminals are not active.

Wiring Diagrams

Models Ending 01B1, 04B1, 05B1

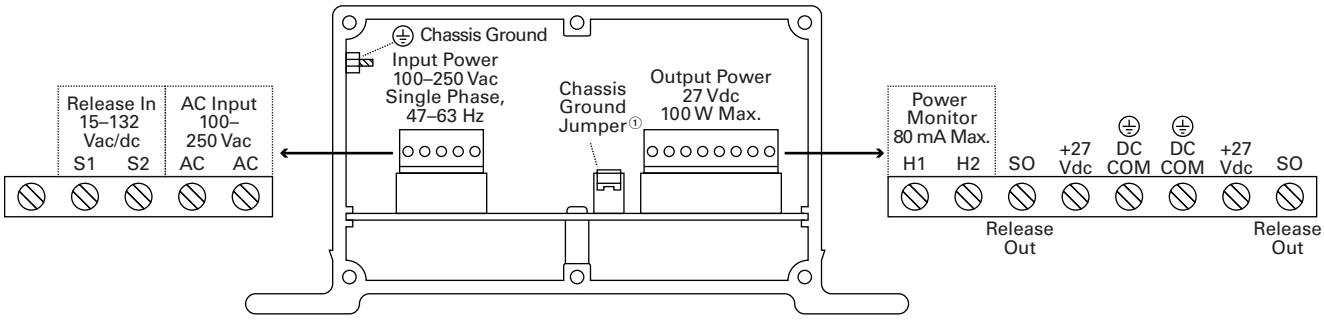

Models Ending 02B1

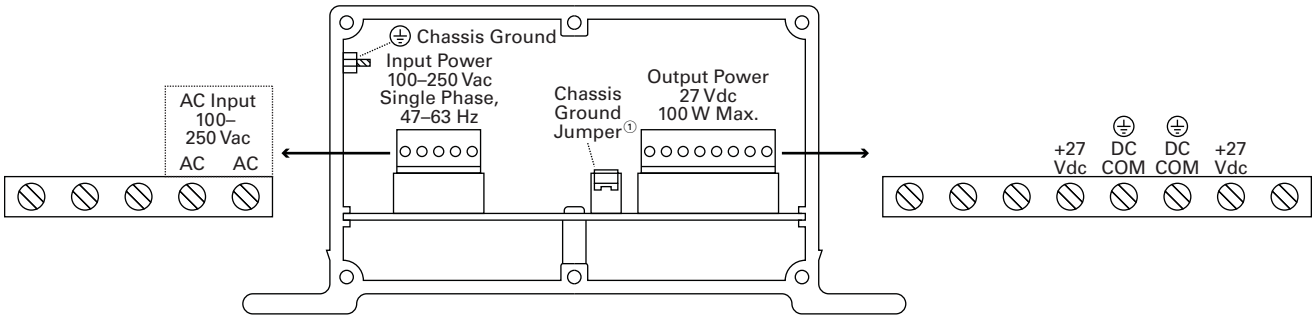

Dimensions

Approximate Dimensions in Inches (mm)

NEMA 4 Universal Voltage

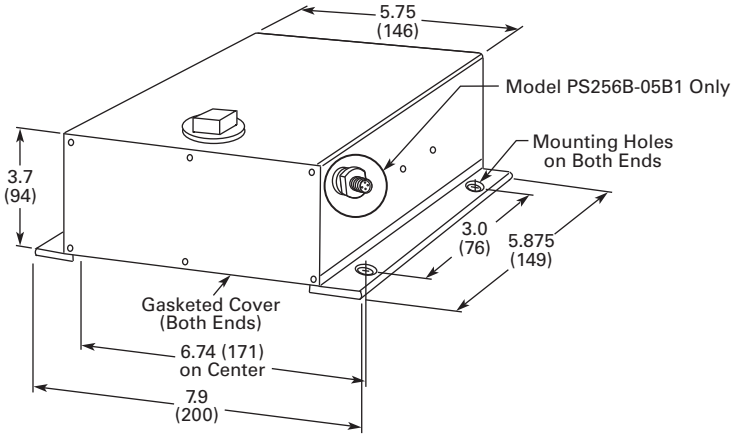

Note

① Install jumper for single power supply systems. In systems where multiple power supplies are connected to a DC bus, install the jumper in only one supply.

Sensor Power Supply—NEMA 1, 120 Vac

Contents

Description	*Page*
Sensor Power Supply—NEMA 1, 120 Vac	
Product Selection	**V8-T6-29**
Technical Data and Specifications	**V8-T6-29**
Wiring Diagram	**V8-T6-30**
Dimensions	**V8-T6-30**

Sensor Power Supply—NEMA 1, 120 Vac

Product Description

The Sensor Power Supply by Eaton's electrical sector was specially designed to be used with the 200 Series and E68 Series Zero Pressure Accumulation Systems, but is also suitable for use in a wide variety of general material handling applications. The unit delivers 100W output at 27 Vdc and supports easy, Class II wiring. The power supply is a tamper-proof, rugged component easily mounted to a conveyor side-channel or support. Internal components are fully encapsulated in a strong die-cast housing to stand up to rugged handling, ensuring flawless performance in any material handling environment.

Features

- Integrated AC junction box for one-step mounting and wiring without the need for additional accessories
- Built-in DC power health contact allows easy monitoring of power supply status
- Unitized design features a tamper-proof encapsulated construction to reduce the risk of damage associated with conventional open control-panel type construction
- Built-in slug-release input converts an AC or DC input to the appropriate DC signal for integration with the 200 Series and E68 Series Zero Pressure Accumulation Systems
- Dual output connection terminals to make it easy and convenient to locate the power supply at the center of the cable run

Standards and Certifications

- UL Listed
- cUL Approved

Listed Listed

DANGER

THIS SENSOR IS NOT A SAFETY DEVICE AND IS NOT INTENDED TO BE USED AS A SAFETY DEVICE. This sensor is designed only to detect and read certain data in an electronic manner and perform no use apart from that, specifically no safety-related use. This sensor product does not include self-checking redundant circuitry, and the failure of this sensor product could cause either an energized or de-energized output condition, which could result in death, serious bodily injury, or property damage.

For the most current information on this product, visit our Web site: www.eaton.com

For Customer Service in the U.S. call 1-877-ETN CARE (386-2273), in Canada call 1-800-268-3578.
For Application Assistance in the U.S. and Canada call 1-800-426-9184.

Product Selection

NEMA 1, 120 Vac

Sensor Power Supply—NEMA 1, 120 Vac

Operating Voltage	Output	Slug Input	Type	Slug Output	Catalog Number
105–132 Vac	27 Vdc, 100W; short circuit, overload and overvoltage protection (cycle power to reset)	15–132 Vac/dc 3 mA minimum	Standard For use with 200 series and E68 systems	Sinking or sourcing, switch selectable; 80 mA maximum; short circuit protection for loads less than 32 Vac or Vdc (auto reset)	**PS256A-01B1**
			High current slug For use with solenoid valve systems requiring full current slug signals	Sinking only; 100W output; short circuit, overload and overvoltage protection (cycle power to reset) ①	**PS256A-04B1**

Technical Data and Specifications

Sensor Power Supply—NEMA 1, 120 Vac

Description	PS256A-01B1	PS256A-04B1
Input power	144W, maximum inrush 30A from cold start	144W, maximum inrush 30A from cold start
Input voltage	105–132 Vac	105–132 Vac
Input current (full load)	105 Vac: 1.92A; 115 Vac: 1.65A; 132 Vac: 1.5A	105 Vac: 1.92A; 115 Vac: 1.65A; 132 Vac: 1.5A
Output power	100W	100W
Output voltage	27 Vdc	27 Vdc
Output protection	Short circuit, overload and overvoltage protection (cycle power to reset), diode protected	Short circuit, overload and overvoltage protection (cycle power to reset), diode protected
Regulation	±3%	±3%
Slug input	15–132 Vac/dc	15–132 Vac/dc
Slug output	Sinking or sourcing, switch selectable; 80 mA maximum; short circuit protection for loads less than 32 Vac or Vdc (auto reset)	Sinking only; 100W output; short circuit, overload and overvoltage protection (cycle power to reset) ①
Indicators	Red LED: AC in; green LED: DC out	Red LED: AC in; green LED: DC out
DC fail indication output	NO contact, solid-state relay, 80 mA maximum	NO contact, solid-state relay, 80 mA maximum
Temperature range	–13° to 131°F (–25° to 55°C)	–13° to 131°F (–25° to 55°C)
Vibration	20g	20g
Enclosure material	Die-cast aluminum	Die-cast aluminum
Enclosure rating	NEMA 1	NEMA 1
Connections	Main output/slug output: Two 3-position finger protected barrier strips; AC line input, DC fail indication and slug input: 8-position screw terminal strip inside conduit entry box	Main output/slug output: Two 3-position finger protected barrier strips; AC line input, DC fail indication and slug input: 8-position screw terminal strip inside conduit entry box

Note

① Total output power of supply is 100W. Total supply output power (100W) = main output power + slug output power.

Wiring Diagram

Pin numbers are for reference, rely on pin location when wiring.

Sensor Power Supply—NEMA 1, 120 Vac

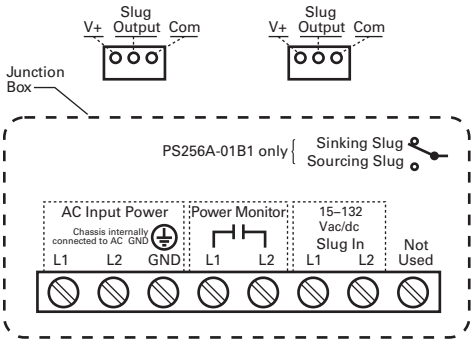

Dimensions

Approximate Dimensions in Inches (mm)
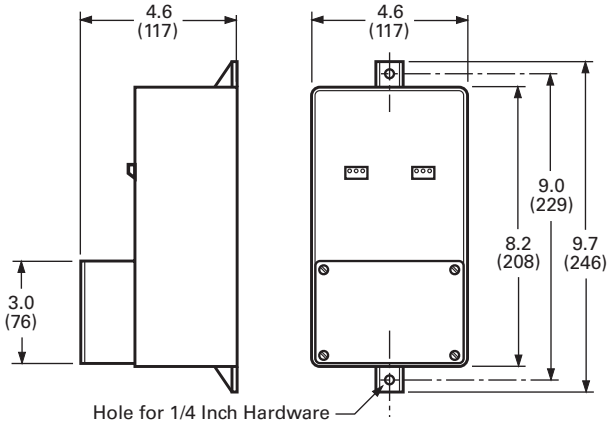
Sensor Power Supply—NEMA 1, 120 Vac