EVT Series VoltageWatch

ECSJ Series CurrentWatch Current Switch

EACR Series CurrentWatch Current Sensor

7.0 Introduction

Product Selection Guide **V8-T7-2**

7.1 EVT Series VoltageWatch Voltage Sensors

Product Description **V8-T7-5**

Product Selection **V8-T7-6**

7.2 ECS Series CurrentWatch Current Switches

Product Description **V8-T7-8**

Product Selection **V8-T7-9**

7.3 ECSJ Series CurrentWatch Current Switches

Product Description **V8-T7-11**

Product Selection **V8-T7-12**

7.4 ECS7 Series CurrentWatch Current Switches

Product Description **V8-T7-15**

Product Selection **V8-T7-16**

7.5 ECSTD Series CurrentWatch Current Switches

Product Description **V8-T7-19**

Product Selection **V8-T7-20**

7.6 ECSD Series CurrentWatch Current Switches

Product Description **V8-T7-23**

Product Selection **V8-T7-24**

7.7 EAC Series CurrentWatch Current Sensors

Product Description **V8-T7-26**

Product Selection **V8-T7-27**

7.8 EACR Series CurrentWatch Current Sensors

Product Description **V8-T7-30**

Product Selection **V8-T7-31**

7.9 EDC Series CurrentWatch Current Sensors

Product Description **V8-T7-33**

Product Selection **V8-T7-34**

7.10 EGF Series CurrentWatch Current Sensors

Product Description **V8-T7-37**

Product Selection **V8-T7-38**

7.11 EGFL Series CurrentWatch Current Sensors

Product Description **V8-T7-42**

Product Selection **V8-T7-43**

Unless otherwise noted, the products contained in this section should not be used for functional safety applications. These products were not designed or tested to IEC 60947-5-3 or recommended for functional safety.

For Customer Service in the U.S. call 1-877-ETN CARE (386-2273),
in Canada call 1-800-268-3578.
For Application Assistance in the U.S. and Canada
call 1-800-426-9184.

Product Selection Guide

EVT Series VoltageWatch Voltage Sensors

Page V8-T7-5

Overview

Eaton's VoltageWatch™ sensor is a high-performance, true RMS sensor for sensing voltage in single- and three-phase installations.

Applications

Detect below normal or "brown out" voltage conditions; protect against possible motor overheating

Identify phase-loss conditions by detecting voltage reduction in one or more phases of a three-phase motor

Monitor overvoltage conditions associated with regenerative voltage to help in diagnosing/avoiding motor drive issues

Detect voltage conditions that may cause stress in or damage to soft starter components (SCRs)

Product Features

True RMS output—allows for use in situations where power supplied is non-sinusoidal

Standard 4–20 mA loop powered output—industry standard output works easily and reliably with existing controllers

Input/output isolation—input and output circuitry is electrically isolated for improved safety

Compact DIN rail mount enclosure— space-saving 35 mm wide enclosure mounts quickly for an attractive installation

Voltage Range

120, 240, 480V

Approvals

UL®
CE (Pending)
RoHS Compliant

ECS Series CurrentWatch AC Current Switches

Page V8-T7-8

Overview

AC current switches for detecting overcurrent condition.

Applications

Electronic proof of flow—current operated switches eliminate the need for multiple pipe or duct penetrations and are more reliable than electro-mechanical pressure or flow switches

Conveyors—detect jams and overloads

Lighting circuits—easier to install and more accurate than photocells

Fans, pumps and heating elements—faster response than temperature sensors

Critical motors

Ancillary equipment

Product Features

Universal outputs—NO or NC solid-state switch for control circuits up to 240 Vac/dc, compatible with most automation systems

Self-powered—cuts installation and operating costs

Easily adjustable setpoint—increases application flexibly and speeds start-up

Solid- or split-core housings—versions tailored for each type of installation

LED indication—provides quick visual indication of contact status

Built-in mounting feet—simple, two-screw panel mount or attach with optional din-rail mounting kit accessory

Current Range

Fixed or adjustable set point, 1–150A

Approvals

UL Listed
cUL® Listed
cULus
CE

ECSJ Series CurrentWatch AC Current Switches

Page V8-T7-11

Overview

Jumper selectable AC switches with solid-state output.

Applications

Electronic proof of flow—current operated switches eliminate the need for multiple pipe or duct penetrations and are more reliable than electro-mechanical pressure or flow switches

Conveyors—detect jams and overloads

Lighting circuits—easier to install and more accurate than photocells

Fans, pumps and heating elements—faster response than temperature sensors

Critical motors

Ancillary equipment

Product Features

Choice of NO or NC solid-state outputs—
1A at 240 Vac
0.15A at 30 Vdc
15A at 120 Vac
3A at 120 Vac
0.15A at 30 Vdc, dual contact

Self-powered—cuts installation and operating costs

Easily adjustable setpoint—speeds start-up and reduces inventory

Solid- or split-core housings—choose the appropriate version for your application

LED indication—provides quick visual indication of output contact status

Built-in mounting feet—provide for a secure installation

Current Range

Adjustable set point, 1.75–200A

Approvals

UL Listed
cUL Listed
cULus
CE

ECS7 Series CurrentWatch AC Current Switches

Page V8-T7-15

Overview

Self-calibrating AC current switch with solid-state outputs.

Applications

Conveyors—use current overload models to detect conveyor jams caused by scenarios such as side-by-sides

Electronic proof of flow—more reliable than electro-mechanical pressure or flow switches, with no need for pipe or duct penetrations

Pump protection—provides overload (jams) and underload (suction loss) indication

Product Features

Self-powered and self-calibrating—reduces installation costs

Status monitoring, overload and operating window options—choose the operating style that matches your application

Universal output—AC or DC compatibility with any automation system

Current Range

Self-calibrating set point, 1.5–150A

Approvals

UL Listed
cUL Listed
cULus
CE

ECSTD Series CurrentWatch AC Current Switches

Page V8-T7-19

Overview

AC current switches with time delay.

Applications

Motor protection—serves as an electronic proof-of-operation; detects current draw changes in motors when they encounter problems such as pumps running dry or pending bearing failure; non-intrusive and less expensive to install than differential pressure flow sensors or thermal switches

High inrush or temporary overload current—adjustable start-up/delay timer allows 0–15 second delay to eliminate nuisance trips from high inrush or short overload conditions

Product Features

Adjustable start-up/delay timer—field adjustable from 0–15 seconds to eliminate nuisance alarms due to start-up inrush or temporary overcurrent conditions

Choice of NO/NC AC or universal outputs—contact ratings of 1.0A at 240 Vac or universal outputs of 0.15A at 240 Vac/dc (NO models) and 0.2A at 135 Vac/dc (NC models) for use with most standard motor control systems

Improved ease of installation and use—self-powered, split-core models simplify installation, 1.0A AC rating eliminates need for time delay relay, and status LED provides visual indication of setpoint trip and contact action

Current Range

Adjustable set point, 1.5–200A

Approvals

UL Listed
cUL Listed
CE

Listed (Pending)

(ECSTD401 and 4025C—No approval)

ECSD Series CurrentWatch DC Current Switches

Page V8-T7-23

Overview

DC switch with solid-state or mechanical relay output.

Applications

Electronic proof of flow—current operated switches eliminate the need for multiple pipe or duct penetrations

Welders—Instant indication of equipment status

Large drive motors—provide monitoring for field loss protection

Power supplies—detect and signal over-current condition before equipment damage

UPS—monitors battery output

Ancillary equipment

Product Features

Choice of mechanical relay or solid-state outputs—
SPDT (Form C) relay, 5.0A at 240 Vac or 30 Vdc
Solid-state, NO, 0.15A at 240 Vac/dc

Easily adjustable setpoint—speeds start-up and reduces inventory

Compact, one-piece design—easily fits in crowded control panels

Input isolation—safer than shunt/relay combinations

Adaptive hysteresis—hysteresis is five percent of setpoint, allowing closer control than fixed-hysteresis switches

Solid-core housings

Current Range

Varies by model

Approvals

UL Listed
cUL Listed
CE

Listed Listed

EAC Series CurrentWatch AC Current Sensors

Page V8-T7-26

Overview

AC current sensor with analog outputs and power supply options.

Applications

Automation equipment—analog current reading for remote monitoring and software alarms

Data loggers—self-powered sensor helps conserve data logger batteries

Panel meters—simple connection displays power consumption

Product Features

Highly accurate—factory matched and calibrated single-piece sensor is more accurate than traditional two-piece, field-installed solutions

Average responding—"average responding" algorithm gives an RMS output on pure sine waves, perfect for constant speed (linear) loads

Jumper selectable ranges—the ability to change input ranges reduces inventory and eliminates zero and span

Isolation—output is magnetically isolated from the input for safety and elimination of insertion loss (voltage drop)

Current Range

0–200A

Approvals

UL Listed
cUL Listed
cULus (except EACP models)
CE marked (except EACP models)

Listed Listed Listed

(EACP models not listed)

EACR Series CurrentWatch RMS Current Sensors

Page V8-T7-30

Overview

True RMS AC current sensing with 4–20 mA output.

Applications

VFD controlled loads—monitoring Vdc output indicates how the motor and attached load are operating

SCR controlled loads—accurate measurement of phase angle fired or burst fired (time proportioned) SCRs, with faster current measurement than temperature sensors

Switching power supplies and electronic ballasts—true RMS sensing is the most accurate way to measure power supply or ballast input power

Product Features

True RMS output—true RMS technology is accurate on distorted waveforms like VFD or SCR outputs

Jumper-selectable ranges—reduces inventory and eliminates zero and span

Isolation—output is magnetically isolated from the input for safety and elimination of insertion loss (voltage drop)

Current Range

0–200A true RMS

Approvals

UL Listed
cUL Listed
cULus
CE

Listed Listed Listed

EDC Series CurrentWatch DC Current Sensors

Page V8-T7-33

Overview

Current sensing for DC loads up to 300A with analog outputs.

Applications

Battery banks—monitors load current, monitors charging current and verifies operation

Transportation—measures traction power or auxiliary loads

Electric heating elements—monitors heater loads with a faster response time than temperature sensors

Product Features

Jumper-selectable ranges—reduces inventory and eliminates zero or span pots

Isolation—output is magnetically isolated from the input for safety, also eliminating insertion loss (voltage drop)

Internal power regulation—cuts installation costs and works well, even with unregulated power

Split core design and built-in mounting brackets—makes installation quick and easy

Current Range

0–400A

Approvals

UL Listed (Pending)
CE

Listed

EGF Series CurrentWatch Ground Fault Sensors

Page V8-T7-37

Overview

Ground fault sensors with solid-state or mechanical relay outputs.

Applications

Personnel protection (typically 5 mA)—detects sensitive ground fault conditions, which could cause injury to people, and functions as a sensor and alarm trigger when applied as an input to an overall ground fault protection system

Equipment protection (typically 10 or 30 mA)—for applications where personnel protection is not the primary concern, higher setpoint capability helps eliminate nuisance tripping while still providing adequate ground fault detection to protect machine electronics

Product Features

Broad range of options to meet application needs—NO or NC, solid-state or mechanical relays, normally energized or normally de-energized contacts

Setpoint options maximize ease-of-use and application flexibility—field selectable 5, 10 or 30 mA setpoints on the EGF "Tri-set" models make user adjustments fast, sure and convenient

Compatible with standard equipment—application on single- and three-phases systems, ideal for use with shunt trip breakers, and magnetically isolated from monitored circuit and control power

Current Range

Fixed or adjustable 5/10/30 mA trip

Approvals

UL Recognized
CE

EGFL Series CurrentWatch Ground Fault Sensors

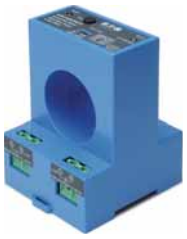

Page V8-T7-42

Overview

Ground fault sensors with mechanical relays.

Applications

Personnel protection (typically 5 mA)—detects sensitive ground fault conditions, which could cause injury to people

Equipment protection (typically 10 or 30 mA)—for applications where personnel protection is not the primary concern, higher setpoint capability helps eliminate nuisance tripping

Regulatory—meets requirements as stipulated by governmental and industrial regulatory groups for ground fault sensing

Product Features

Broad range of options to meet application needs—mechanical relays, normally energized or normally de-energized contacts

Setpoint options maximize ease-of-use and application flexibility—field selectable 5, 10 or 30 mA setpoints on the EGFL "tri-set" models make user adjustments fast, sure and convenient

Compatible with standard equipment—application on single- and three-phase systems, ideal for use with shunt trip breakers, and magnetically isolated from monitored circuit and control power

Current Range

Tri-Set Adjustable, 5, 10 or 30 mA

Approvals

UL Approved
cULus
CE

Listed

EVT Series VoltageWatch Voltage Sensors

Contents

Description	*Page*
EVT Series VoltageWatch Voltage Sensors	
Standards and Certifications	**V8-T7-6**
Catalog Number Selection	**V8-T7-6**
Product Selection	**V8-T7-6**
Technical Data and Specifications	**V8-T7-7**
Wiring Diagram	**V8-T7-7**
Dimensions	**V8-T7-7**

EVT Series VoltageWatch Voltage Sensors

Product Description

Eaton's VoltageWatch™ sensor is a high-performance, true RMS sensor for sensing voltage in single- and three-phase installations. Applicable on nominal circuits of 120V, 240V and 480V, this voltage sensor provides a fully isolated analog output proportional to rated nominal voltage in both sinusoidal and non-sinusoidal (variable frequency) situations. It is housed in a slim, compact, easy-to-install DIN rail mount enclosure.

Ideal for situations where power quality is of interest or concern, the VoltageWatch sensor facilitates monitoring of supply voltage levels, identifying undervoltage or overvoltage conditions, and helping to protect critical motors and electronics. Designed with an industry-standard 4–20 mA output, VoltageWatch is easily coupled to a data logger, panel meter or PLC to enable basic trending of operational status of low voltage circuits up to real-time monitoring and reporting of supply voltage levels.

For the most current information on this product, visit our Web site: www.eaton.com

Application Description

True RMS Voltage Monitoring

- Detect below normal or "brown out" voltage conditions; protect against possible motor overheating
- Identify phase-loss conditions by detecting voltage reduction in one or more phases of a three-phase motor
- Monitor overvoltage conditions associated with regenerative voltage to help in diagnosing/avoiding motor drive issues
- Detect voltage conditions that may cause stress in or damage to soft starter components (SCRs)

Example Application—Phase Loss

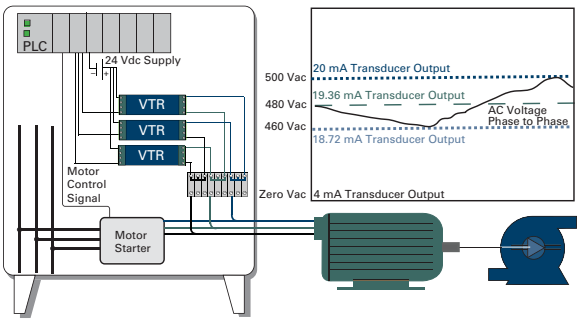

Features

- **True RMS Output**—Allows for use in situations where power supplied is non-sinusoidal, such as VFD applications, poor power quality installations or other electrically harsh/challenging environments
- **Standard 4–20 mA Loop Powered Output**—Industry standard output works easily and reliably with existing controllers, data loggers and SCADA equipment
- **Input/Output Isolation**—Input and output circuitry is electrically isolated for improved safety
- **Compact DIN Rail Mount Enclosure**—Space-saving 35 mm wide enclosure mounts quickly for an attractive installation

For Customer Service in the U.S. call 1-877-ETN CARE (386-2273), in Canada call 1-800-268-3578.
For Application Assistance in the U.S. and Canada call 1-800-426-9184.

Standards and Certifications

- UL
- CE (Pending)
- RoHS Compliant

DANGER

THIS SENSOR IS NOT A SAFETY DEVICE AND IS NOT INTENDED TO BE USED AS A SAFETY DEVICE. This sensor is designed only to detect and read certain data in an electronic manner and perform no use apart from that, specifically no safety-related use. This sensor product does not include self-checking redundant circuitry, and the failure of this sensor product could cause either an energized or de-energized output condition, which could result in death, serious bodily injury, or property damage.

Catalog Number Selection

VoltageWatch EVT Series—Top Terminal Current Sensors

EVT 1 - 420 - 24L

Standard Family Name	Nominal Range	Output Type	Supply Voltage
EVT = VoltageWatch sensor	**1** = 120V **3** = 240V **4** = 480V	**420** = 4–20 mA	**24L** = 24V Loop powered

Product Selection

EVT Series

VoltageWatch EVT Series—Top Terminal Current Sensors

Power Supply	Output Signal	Nominal Voltage	Catalog Number
24 Vdc loop powered	4–20 mA	120	**EVT1-420-24L**
		240	**EVT3-420-24L**
		480	**EVT4-420-24L**

Technical Data and Specifications

VoltageWatch EVT Series

Description	Specification
Power supply	24 Vdc loop-powered
Input	120V, 240V, 480V
Input over-range	+15% of nominal range
Output	4–20 mA proportional; capped at 24 mA maximum
Response time	250 ms (to 90% value)
Accuracy	<1%
Linearity	<0.5%
Loading	<500 ohms
Isolation voltage	2500 Vac
Frequency range	40 Hz–5 kHz
Operating temperature	–22° to 140°F (–30° to 60°C)
Mounting	DIN rail compatible
Case	UL 94 V0 flammability rated; noncorrosive thermoplastic
Environmental	14° to 122°F (–10° to 50°C), 0–95% RH noncondensing
EMC/immunity	EN50081-1, EN50082-2
Ripple	<1% (peak to peak)
Listings	UL/cUL and CE pending

Wiring Diagram

VoltageWatch EVT Series

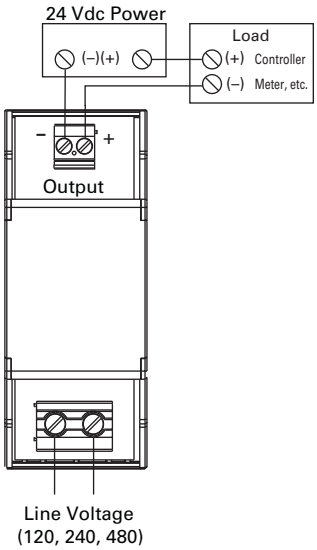

Dimensions

Approximate Dimensions in Inches (mm)

Complete Unit

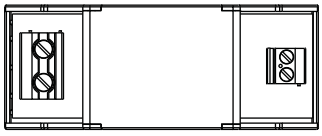

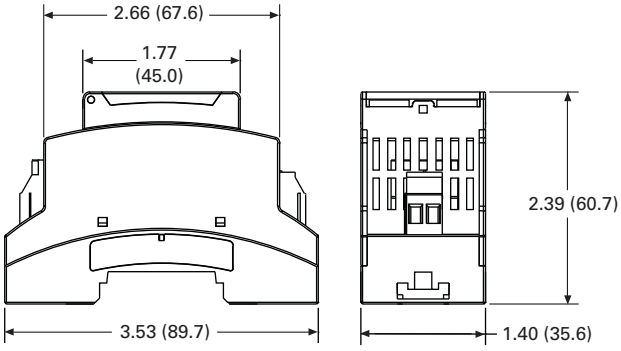

ECS Series CurrentWatch Current Switches

Contents

Description	*Page*
ECS Series CurrentWatch Current Switches	
Standards and Certifications	**V8-T7-9**
Product Selection	**V8-T7-9**
Accessories	**V8-T7-9**
Technical Data and Specifications	**V8-T7-10**
Wiring Diagram	**V8-T7-10**
Dimensions	**V8-T7-10**

ECS Series CurrentWatch Current Switches

Product Description

The CurrentWatch™ ECS Series from Eaton's electrical sector is a family of solid-state adjustable current switches, ideal for providing status information on electrical equipment. The ECS is excellent for new installations, where the conductors run through the housing, requiring no cutting. These switches are also ideal for retrofits, since split-core models can be opened to fit around existing conductors. The current switch is accurate, reliable and easy to install.

The ECS can sense continuous currents from 1 to 150A and does not require any supply voltage, as the power required is induced from the monitored conductor. The output is a non-polarity-sensitive solid-state contact for switching AC and DC circuits up to 240 Vac/dc. This switch also includes an LED indicating two states: on and below trip point, and above trip point with contacts energized. All ECS Series switches carry an unconditional five-year warranty.

Any change in current can be sensed with the ECS Series. A change in current may indicate motor failure, belt loss/slippage or mechanical failure. Any of these events can cause the current to drop significantly, tripping the switch and notifying the controller.

Application Description

Typical Applications

- **Electronic Proof of Flow**—Current operated switches eliminate the need for multiple pipe or duct penetrations and are more reliable than electro-mechanical pressure or flow switches
- **Conveyors**—Detect jams and overloads
- **Lighting Circuits**—Easier to install and more accurate than photocells
- **Fans, Pumps and Heating Elements**—Faster response than temperature sensors
- **Critical Motors**
- **Ancillary Equipment**

Example Application—
Pump Jam and Suction Loss Protection

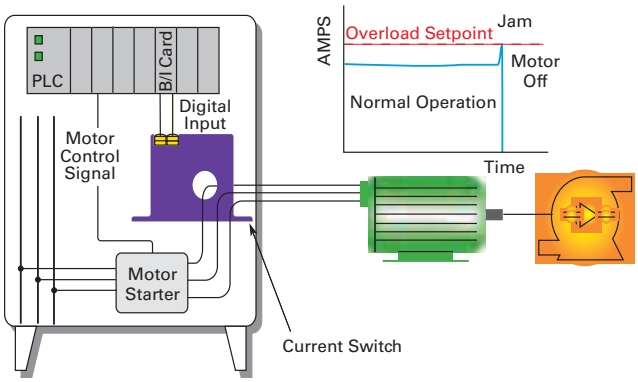

Features

- **Universal Outputs**—NO or NC solid-state switch for control circuits up to 240 Vac/dc, compatible with most automation systems
- **Self-Powered**—Cuts installation and operating costs
- **Easily Adjustable Setpoint**—Increases application flexibly and speeds start-up
- **Solid- or Split-Core Housings**—Versions tailored for each type of installation
- **LED Indication**—Provides quick visual indication of contact status
- **Built-In Mounting Feet**—Simple, two-screw panel mount or attach with optional DIN-rail mounting kit accessory

For the most current information on this product, visit our Web site: www.eaton.com

For Customer Service in the U.S. call 1-877-ETN CARE (386-2273), in Canada call 1-800-268-3578.
For Application Assistance in the U.S. and Canada call 1-800-426-9184.

Standards and Certifications

- UL Listed
- cUL Listed
- CE Certified

Listed Listed

DANGER

THIS SENSOR IS NOT A SAFETY DEVICE AND IS NOT INTENDED TO BE USED AS A SAFETY DEVICE. This sensor is designed only to detect and read certain data in an electronic manner and perform no use apart from that, specifically no safety-related use. This sensor product does not include self-checking redundant circuitry, and the failure of this sensor product could cause either an energized or de-energized output condition, which could result in death, serious bodily injury, or property damage.

Product Selection

ECS Series CurrentWatch Current Switches

Top Terminal Current Switches

Solid-Core Housing

Split-Core Housing

Power Supply	Aperture Size	Output Signal	Setpoint and LED Configuration	Catalog Number
Solid-Core Housing				
Self powered (no external power needed)	0.74 in (19 mm)	Normally open	Adjustable 1–150A setpoint with LED	**ECSNOASC**
			Fixed 1.0A setpoint no LED	**ECSNOFSC**
			Fixed 5.5A setpoint no LED	**ECSNOFSCY1**
		Normally closed	Adjustable 1–150A setpoint with LED	**ECSNCASC**
			Fixed 1.0A setpoint no LED	**ECSNCFSC**
Split-Core Housing				
Self powered (no external power needed)	0.85 in (21.6 mm)	Normally open	Adjustable 1.75–150A setpoint with LED	**ECSNOASP**
			Fixed 1.5A setpoint no LED	**ECSNOFSP**
		Normally closed	Adjustable 1.75–150A setpoint with LED	**ECSNCASP**
			Fixed 1.5A setpoint no LED	**ECSNCFSP**

Accessories

DIN Rail Mounting Kit

ECS Series CurrentWatch Current Switches

Description	Catalog Number
DIN rail mounting kit ①	**EDINKIT**

Note

① Sensor pictured for reference and not included in kit.

Technical Data and Specifications

ECS Series CurrentWatch Current Switches

Description	Specification
Power supply	Self-powered—no power supply needed
Output	Magnetically isolated solid-state switch
Output rating	NO version: 0.15A at 240 Vac/dc NC version: 0.2A at 135 Vac/dc Models ending Y1: 5.0A, 125 Vac, 30 Vdc
Off-state leakage	<10 µA
Response time	120 ms
Setpoint range	Solid-core housings: 1–150A Split-core housings: 1.75–150A
Hysteresis	5% of setpoint

Description	Specification
Overload	Fixed setpoint, NO models: 6 sec. at 500A; 1 sec. at 1000A All other models: 6 sec. at 400A; 1 sec. at 1000A Maximum continuous Amps: 250A
Isolation voltage	UL listed to 1270 Vac, tested to 5000 Vac
Frequency range	6–100 Hz
Sensing aperture	Solid-core housings: 0.74 in (19 mm) Split-core housings: 0.85 in (21.6 mm)
Housing	UL94 V0 flammability rated
Environmental	Operating temperature: –58° to 122°F (–50° to 50°C) Humidity: 0–95% RH, non-condensing

Wiring Diagram

ECS Series CurrentWatch Current Switches

Normally open (NO) models shown

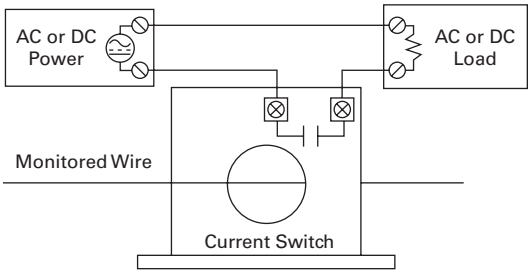

Dimensions

Approximate Dimensions in Inches (mm)

Solid-Core Housing

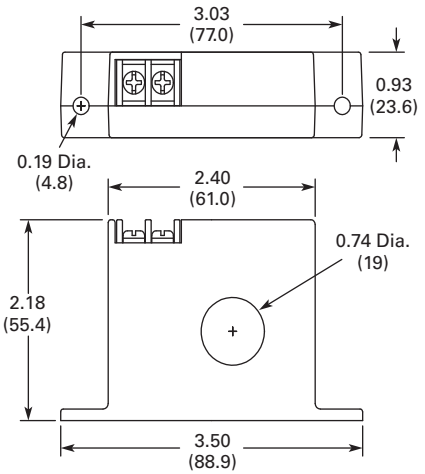

Split Core Housing

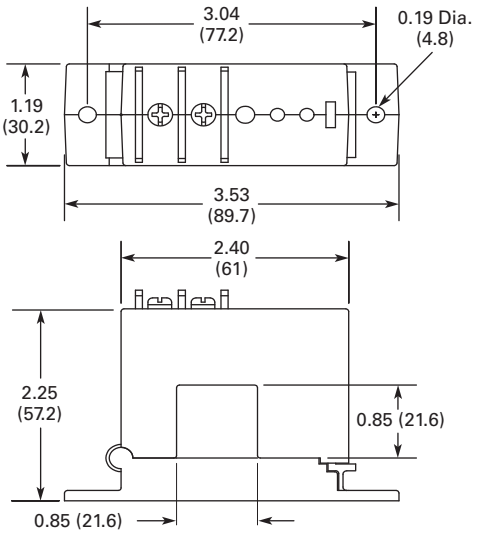

ECSJ Series CurrentWatch Current Switches

Contents

Description	*Page*
ECSJ Series CurrentWatch Current Switches	
Standards and Certifications	**V8-T7-12**
Product Selection	**V8-T7-12**
Accessories	**V8-T7-13**
Technical Data and Specifications	**V8-T7-13**
Wiring Diagrams	**V8-T7-14**
Dimensions	**V8-T7-14**

ECSJ Series CurrentWatch Current Switches

Product Description

The CurrentWatch ECSJ Series current operated switches from Eaton's electrical sector provide the same dependable indication of status offered by the CurrentWatch ECS Series, but with the added benefit of increased setpoint precision. A choice of three, jumper-selectable input ranges allows the ECSJ Series to be tailored to an application, providing more precise control through improved setpoint resolution. Self-powering, isolated solid-state outputs, 1–6A, 6–40A and 40–200A input ranges, and a choice of split- or solid-core enclosures are standard.

For typical applications of the CurrentWatch ECSJ Series, see listing on this page.

Application Description

Typical Applications

- **Electronic Proof of Flow**—Current operated switches eliminate the need for multiple pipe or duct penetrations and are more reliable than electro-mechanical pressure or flow switches
- **Conveyors**—Detect jams and overloads
- **Lighting Circuits**—Easier to install and more accurate than photocells
- **Fans, Pumps and Heating Elements**—Faster response than temperature sensors
- **Critical Motors**
- **Ancillary Equipment**

Example Application—
Pump Jam and Suction Loss Protection

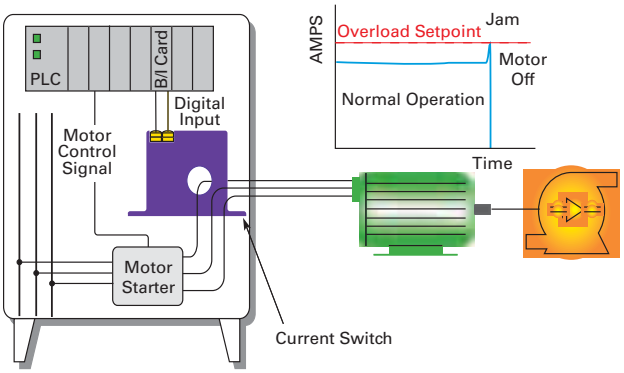

Features

- **Choice of NO or NC Solid-State Outputs**—
  - 1A at 240 Vac
  - 0.15A at 30 Vdc
  - 15A at 120 Vac
  - 3A at 120 Vac
  - 0.15A at 30 Vdc, dual contact
- **Self-Powered**—Cuts installation and operating costs
- **Easily Adjustable Setpoint**—Speeds start-up and reduces inventory
- **Solid- or Split-Core Housings**—Choose the appropriate version for your application
- **LED Indication**—Provides quick visual indication of output contact status
- **Built-In Mounting Feet**—Provide for a secure installation
- **UL, cUL and CE Approved**—Accepted worldwide

For the most current information on this product, visit our Web site: www.eaton.com

For Customer Service in the U.S. call 1-877-ETN CARE (386-2273), in Canada call 1-800-268-3578.
For Application Assistance in the U.S. and Canada call 1-800-426-9184.

Standards and Certifications

- UL Listed
- cUL Listed
- CE Certified
- UL 508 Industrial Control Equipment (USA and Canada)

Listed Listed

DANGER

THIS SENSOR IS NOT A SAFETY DEVICE AND IS NOT INTENDED TO BE USED AS A SAFETY DEVICE. This sensor is designed only to detect and read certain data in an electronic manner and perform no use apart from that, specifically no safety-related use. This sensor product does not include self-checking redundant circuitry, and the failure of this sensor product could cause either an energized or de-energized output condition, which could result in death, serious bodily injury, or property damage.

Product Selection

ECSJ Series CurrentWatch Current Switches

Front and Top Terminal Switches

	Power Supply	Aperture Size	Output Type, Voltage and Rating	Setpoint and LED Configuration	Catalog Number
Solid-Core Housing with Front Terminal	**Solid-Core Housing with Front Terminal**				
	Self-powered (no external power needed)	0.55 in (14 mm)	Normally open, 1A at 240 Vac	Adjustable 1–6, 6–40 or 40–175A setpoint with LED	**ECSJ400SC**
			Normally open, 15A at 120 Vac, 10A at 240 Vac	Adjustable 1–6, 6–40 or 40–175A setpoint with LED	**ECSJ406SC** ①
			Normally closed, 1A at 240 Vac	Adjustable 1–6, 6–40 or 40–175A setpoint with LED	**ECSJ401SC**
			Normally closed, 15A at 120 Vac, 10A at 240 Vac	Adjustable 1–6, 6–40 or 40–175A setpoint with LED	**ECSJ407SC** ①
			Dual contact, NO and NC, 0.15A at 30 Vdc	Adjustable 1–6, 6–40 or 40–175A setpoint without LED	**ECSJ430SC** ①
			Normally open, 0.15A at 30 Vdc	Adjustable 1–6, 6–40 or 40–175A setpoint with LED	**ECSJ420SC**
				Adjustable 1–6, 6–40 or 40–175A setpoint without LED	**ECSJ424SC**
			Normally closed, 0.15A at 30 Vdc	Adjustable 1–6, 6–40 or 40–175A setpoint with LED	**ECSJ421SC**
Solid-Core Housing with Top Terminal	**Solid-Core Housing with Top Terminal**				
	Self-powered (no external power needed)	0.74 in (19 mm)	Normally open, 3A at 120 Vac	Adjustable 1–6, 6–40 or 40–175A setpoint with LED	**ECSJ404SC**
			Normally closed, 3A at 120 Vac	Adjustable 1–6, 6–40 or 40–175A setpoint with LED	**ECSJ405SC**
Split-Core Housing	**Split-Core Housing**				
	Self-powered (no external power needed)	0.85 in (21.6 mm)	Normally open, 1A at 240 Vac	Adjustable 1.75–6, 6–40 or 40–200A setpoint with LED	**ECSJ402SP**
			Normally closed, 1A at 240 Vac	Adjustable 1.75–6, 6–40 or 40–200A setpoint with LED	**ECSJ403SP**
			Normally open, 0.15A at 30 Vdc	Adjustable 1.75–6, 6–40 or 40–200A setpoint with LED	**ECSJ422SP**
			Normally closed, 0.15A at 30 Vdc	Adjustable 1.75–6, 6–40 or 40–200A setpoint with LED	**ECSJ423SP**

Note

① Unit features built-in heatsink that adds to height. See dimension drawings on **Page V8-T7-14** for details.

Accessories

DIN Rail Mounting Kit

ECSJ Series CurrentWatch Current Switches

Description	Catalog Number
DIN rail mounting kit ①	**EDINKIT**

Technical Data and Specifications

ECSJ Series CurrentWatch Current Switches

Description	AC Solid-State Output Specification	DC Solid-State Output Specification
Power supply	Self-powered—no power supply needed	Self-powered—no power supply needed
Output	Isolated solid-state switch	Isolated solid-state switch
Output rating		
Standard models	1.0A at 240 Vac	0.15A at 30 Vdc
High current switching models	ECSJ404SC and ECSJ405SC: 3.0A at 120 Vac	ECSJ430SC: 0.15A at 30 Vdc, dual contact, NO and NC
Very high current switching models	ECSJ406SC and ECSJ407SC: 15A at 120 Vac, 10A at 240 Vac	—
Off-state leakage	NO models: <10 µA NC models: 2.5 mA	NO models: <10 µA NC models: 2.5 mA
Response time	40–120 ms	40–120 ms
Setpoint range (adjustable)	Solid-core models: 1–6, 6–40 and 40–175A Split-core models: 1.75–6, 6–40 and 40–200A	Solid-core models: 1–6, 6–40 and 40–175A Split-core models: 1.75–6, 6–40 and 40–200A
Hysteresis	Low: 6%; mid: 4%; high: 3%	Low: 6%; mid: 4%; high: 3%
Isolation voltage	UL listed to 1270 Vac, tested to 5000 Vac	UL listed to 1270 Vac, tested to 5000 Vac
Frequency range	6–100 Hz	6–100 Hz
Sensing aperture	Solid-core, front terminal models: 0.55 in (14 mm) Solid-core, top terminal models: 0.74 in (19 mm) Split-core models: 0.85 in (21.6 mm) sq.	Solid-core, front terminal models: 0.55 in (14 mm) Solid-core, top terminal models: 0.74 in (19 mm) Split-core models: 0.85 in (21.6 mm) sq.
Housing	UL94 V0 flammability rated	UL94 V0 flammability rated
Environmental	Operating temperature: –58° to 122°F (–50° to 50°C) Humidity: 0–95% RH, non-condensing	Operating temperature: –58° to 122°F (–50° to 50°C) Humidity: 0–95% RH, non-condensing

Overload Ratings

		Maximum Amperes	
Housing	**Range**	**Six Seconds**	**One Second**
Solid-core	1–6A	400A	600A
	6–40A	500A	800A
	40–175A	800A	1200A
Split-core	1.75–6A	400A	600A
	6–40A	500A	800A
	40–200A	800A	1200A

Note

① Sensor pictured for reference and not included in kit.

Wiring Diagrams ①②

All Normally Open (NO) Models

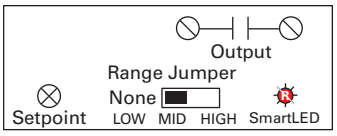

ECSJ430SC (Dual Contact, NO and NC)

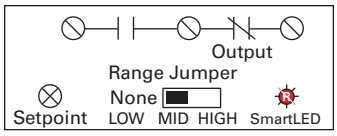

All Normally Closed (NC) Models

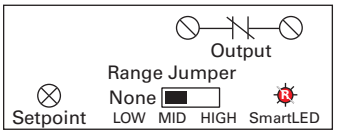

Dimensions

Approximate Dimensions in Inches (mm)

All Solid-Core Models with Front Terminals Except ECSJ406SC and ECSJ407SC

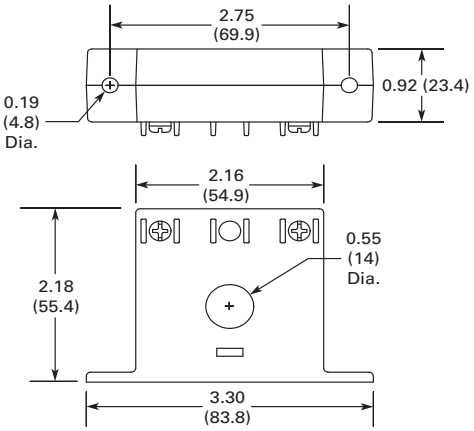

All Solid-Core Models with Top Terminals

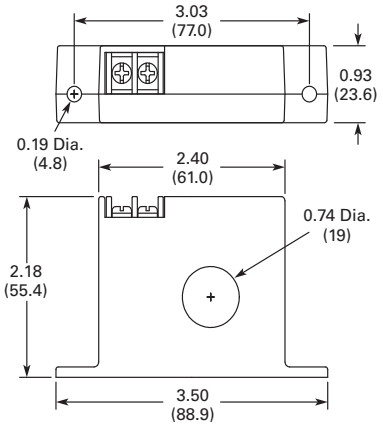

ECSJ406SC and ECSJ407SC Solid-Core Models with Front Terminals

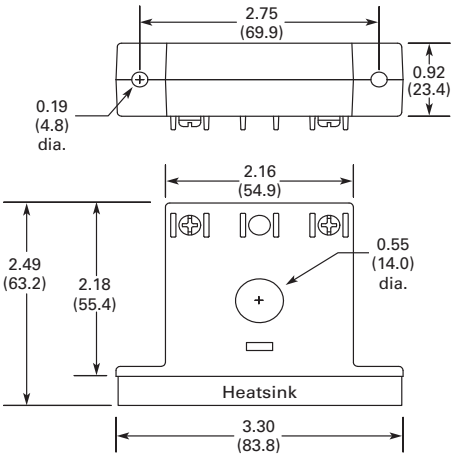

All Split-Core Models

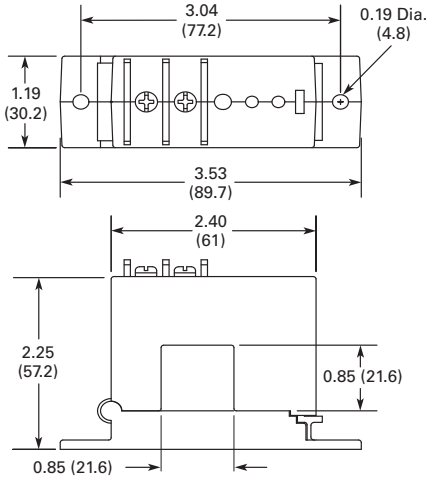

Notes

① Terminals are #6 screws.
② DC contacts are polarity sensitive.

ECS7 Series CurrentWatch Current Switches

Contents

Description	*Page*
ECS7 Series CurrentWatch Current Switches	
Product Selection	**V8-T7-16**
Accessories	**V8-T7-16**
Technical Data and Specifications	**V8-T7-17**
Wiring Diagram	**V8-T7-18**
Dimensions	**V8-T7-18**

ECS7 Series CurrentWatch Current Switches

Product Description

The CurrentWatch ECS7 Series load monitoring switches from Eaton's electrical sector are designed for overload, underload or operating window applications. Upon sensing an average operating current, the ECS7 Series self-learns and establishes a limit-alarm trip point based on ±15% of the average expected current draw. The ECS7 Series is available in solid- or split-core housing styles.

For typical applications of the CurrentWatch ECS7 Series, see listing on this page.

Application Description

Typical Applications

- **Conveyors**—Use current overload models to detect conveyor jams caused by scenarios such as side-by-sides
- **Electronic Proof of Flow**—More reliable than electro-mechanical pressure or flow switches, with no need for pipe or duct penetrations
- **Pump Protection**—Provides overload (jams) and underload (suction loss) indication

Features

- **Self-Powered and Self-Calibrating**—Reduces installation costs
- **Status Monitoring, Overload and Operating Window Options**—Choose the operating style that matches your application
- **Universal Output**—AC or DC compatibility with any automation system
- **UL, cUL and CE Approved**—Accepted worldwide

Standards and Certifications

- UL Listed
- cUL Listed
- CE Certified
- UL 508 Industrial Control Equipment (USA and Canada)

Listed Listed

DANGER

THIS SENSOR IS NOT A SAFETY DEVICE AND IS NOT INTENDED TO BE USED AS A SAFETY DEVICE. This sensor is designed only to detect and read certain data in an electronic manner and perform no use apart from that, specifically no safety-related use. This sensor product does not include self-checking redundant circuitry, and the failure of this sensor product could cause either an energized or de-energized output condition, which could result in death, serious bodily injury, or property damage.

For the most current information on this product, visit our Web site: www.eaton.com

For Customer Service in the U.S. call 1-877-ETN CARE (386-2273), in Canada call 1-800-268-3578.
For Application Assistance in the U.S. and Canada call 1-800-426-9184.

Product Selection

ECS7 Series CurrentWatch Current Switches

Solid-Core Housing

Split-Core Housing

Front and Top Terminal Switches

Power Supply	Output Type	Aperture Size	Intelligent Logic	Catalog Number
Solid-Core Housing				
Self-powered (no external power needed)	Normally open	0.74 in (19 mm)	Over/underload, 1.5–150A self-calibrating	**ECS701SC** ①
			Overload only, 1.5–150A self-calibrating	**ECS700SC**
			Underload only, 1.5–150A self-calibrating	**ECS702SC**
Split-Core Housing				
Self-powered (no external power needed)	Normally open	0.85 in (21.6 mm)	Over/underload, 2.8–150A self-calibrating	**ECS711SP** ①
			Overload only, 2.8–150A self-calibrating	**ECS710SP**
			Underload only, 2.8–150A self-calibrating	**ECS712SP**

Accessories

DIN Rail Mounting Kit

ECS7 Series CurrentWatch Current Switches

Description	Catalog Number
DIN rail mounting kit ②	**EDINKIT**

Notes

① Output is closed when current is within ±15% window.
② Sensor pictured for reference and not included in kit.

Technical Data and Specifications

ECS7 Series CurrentWatch Current Switches

Description	Specification
Power supply	Self-powered—no power supply needed
Output	Magnetically isolated solid-state switch
Output rating	Normally open (NO) models: 0.3A at 135 Vac/dc Not polarity sensitive
Off-state leakage	<10 µA
Response time	200 ms
Setpoint range	Solid-core models: 1.5 to 150A Split-core models: 2.8 to 150A
Setpoint	Overload models: +15% of load Underload models: –15% of load Operating window: ±5% of setpoint
Hysteresis	5% of setpoint
Overload	500A at 6 sec., 1000A at 1 sec.
Isolation voltage	UL listed to 1270 Vac, tested to 5000 Vac
Frequency range	6–100 Hz
Sensing aperture	Solid-core models: 0.74 in (19 mm) dia. Split-core models: 0.85 in (21.6 mm) sq.
Housing	UL94 V0 flammability rated
Environmental	Operating temperature: –58° to 122°F (–50° to 50°C) Humidity: 0–95% RH, non-condensing

Current Switch Operation

Underload Only Models

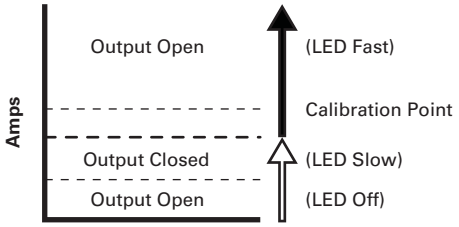

Overload Only Models

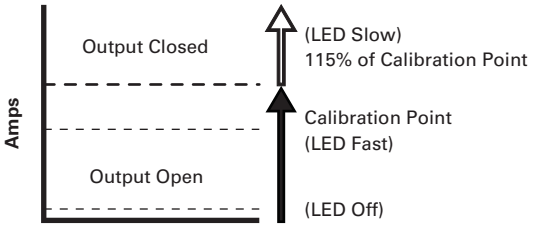

Over/Underload Models ①

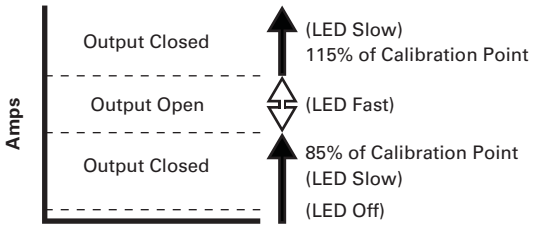

Note

① Output is closed when current is within ±15% window.

Wiring Diagram

ECS7 Series CurrentWatch Current Switches

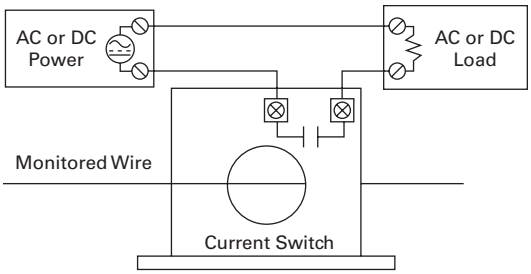

Dimensions

Approximate Dimensions in Inches (mm)

Solid-Core Housing

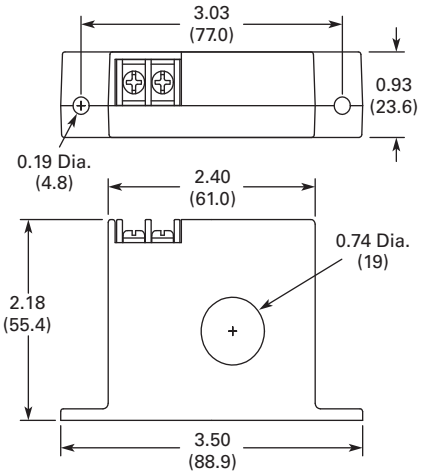

Split-Core Housing

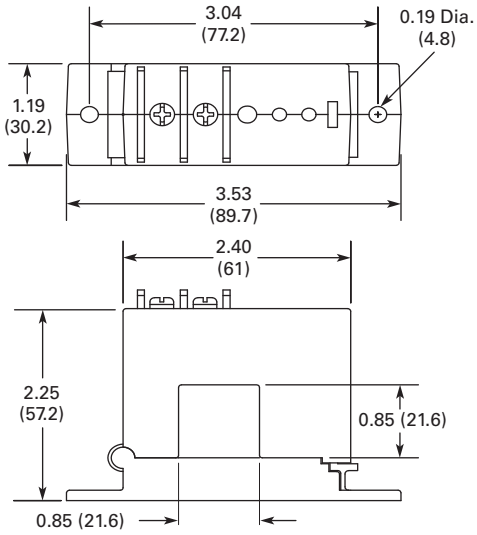

ECSTD Series CurrentWatch Current Switches

Contents

Description	*Page*
ECSTD Series CurrentWatch Current Switches	
Standards and Certifications	**V8-T7-20**
Product Selection	**V8-T7-20**
Accessories	**V8-T7-21**
Technical Data and Specifications	**V8-T7-21**
Wiring Diagram	**V8-T7-22**
Dimensions	**V8-T7-22**

ECSTD Series CurrentWatch Current Switches

Product Description

The CurrentWatch ECSTD Series from Eaton's electrical sector is a family of high performance current-operated switches with field-adjustable time delay to help minimize nuisance trips during start-up and operation. Designed for motor status applications where setpoint accuracy and repeatability are critical, the ECSTD Series offers a linear setpoint characteristic and constant hysteresis. Standard features include self-powering, jumper-selectable ranges and a choice of outputs and housing styles.

For typical applications of the CurrentWatch ECSTD Series, see listing on this page.

Application Description

Typical Applications

- **Motor Protection**—Serves as an electronic proof-of-operation; detects current draw changes in motors when they encounter problems such as pumps running dry or pending bearing failure; non-intrusive and less expensive to install than differential pressure flow sensors or thermal switches; much quicker response time than Class 10 overload relays
- **High Inrush or Temporary Overload Current**—Adjustable start-up/delay timer allows 0–15 second delay to eliminate nuisance trips from high inrush or short overload conditions

Example Application—Isolated Alarm System Interfacing

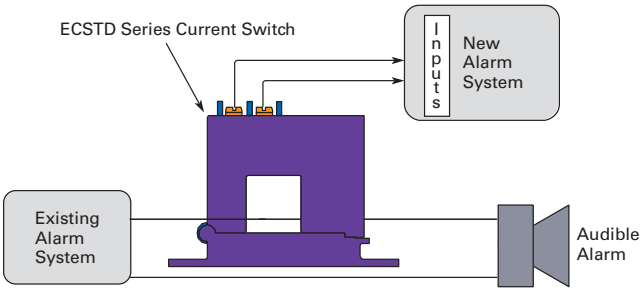

Features

- **Adjustable Start-Up/Delay Timer**—Field adjustable from 0–15 seconds to eliminate nuisance alarms due to start-up inrush or temporary overcurrent conditions
- **Choice of NO/NC AC or Universal Outputs**—Contact ratings of 1.0A at 240 Vac or universal outputs of 0.15A at 240 Vac/dc (NO models) and 0.2A at 135 Vac/dc (NC models) for use with most standard motor control systems
- **Improved Ease of Installation and Use**—Self-powered, split-core models simplify installation, 1.0A AC rating eliminates need for time delay relay, and status LED provides visual indication of setpoint trip and contact action
- **Industrial Grade Performance**—Constant hysteresis and linear response characteristics enhance setpoint accuracy
- **Agency Approved**—UL Listed, CE pending

For the most current information on this product, visit our Web site: www.eaton.com

For Customer Service in the U.S. call 1-877-ETN CARE (386-2273), in Canada call 1-800-268-3578.
For Application Assistance in the U.S. and Canada call 1-800-426-9184.

Standards and Certifications

- UL Listed
- cUL Listed
- CE (Pending)
- UL 508 Industrial Control Equipment (USA and Canada)

UL Listed c UL Listed CE (Pending)

DANGER

THIS SENSOR IS NOT A SAFETY DEVICE AND IS NOT INTENDED TO BE USED AS A SAFETY DEVICE. This sensor is designed only to detect and read certain data in an electronic manner and perform no use apart from that, specifically no safety-related use. This sensor product does not include self-checking redundant circuitry, and the failure of this sensor product could cause either an energized or de-energized output condition, which could result in death, serious bodily injury, or property damage.

Product Selection

ECSTD Series CurrentWatch Current Switches

AC Output Switches (NO/NC 1A at 240 Vac)

Solid-Core Housing

Split-Core Housing

Power Supply	Aperture Size	Output Type	Setpoint Options	Catalog Number
Solid-Core Housing				
Self powered (no external power needed)	0.75 in (19 mm)	Normally open	Adjustable setpoints: 1.5–12, 12–55 or 50–175A	**ECSTD401SC**
		Normally closed	Adjustable setpoints: 1.5–12, 12–55 or 50–175A	**ECSTD402SC**
Split-Core Housing				
Self powered (no external power needed)	0.85 in (21.6 mm)	Normally open	Adjustable setpoints: 2–12, 12– 55 or 50–200A	**ECSTD404SP**
		Normally closed	Adjustable setpoints: 2–12, 12–55 or 50–200A	**ECSTD405SP**

AC/DC Output Switches (NO 0.15A at 240 Vac/dc, NC 0.2A at 135 Vac/dc) ①

Solid-Core Housing

Split-Core Housing

Power Supply	Aperture Size	Output Type	Setpoint Options	Catalog Number
Solid-Core Housing				
Self powered (no external power needed)	0.75 in (19 mm)	Normally open	Adjustable setpoints: 1.5–12, 12–55 or 50–175A	**ECSTD406SC**
		Normally closed	Adjustable setpoints: 1.5–12, 12–55 or 50–175A	**ECSTD407SC**
Split-Core Housing				
Self powered (no external power needed)	0.85 in (21.6 mm)	Normally open	Adjustable setpoints: 2–12, 12– 55 or 50–200A	**ECSTD408SP**
		Normally closed	Adjustable setpoints: 2–12, 12–55 or 50–200A	**ECSTD409SP**

Note

① Preferred for PLC inputs.

Accessories

DIN Rail Mounting Kit

ECSTD Series CurrentWatch Current Switches

Description	Catalog Number
DIN rail mounting kit ①	**EDINKIT**

Technical Data and Specifications

ECSTD Series CurrentWatch Current Switches

Description	Specification
Power supply	Self-powered—no power supply needed
Output	Magnetically isolated solid-state switch
Output rating	AC output models: NO/NC 1A at 240 Vac AC/DC output models: NO 0.15A at 240 Vac/dc; NC 0.20A at 135 Vac/dc
Off-state leakage	<10 µA
Response time	Adjustable 0.2 to 15 sec.
Setpoint range	Solid-core: 1.5–12, 12–55 or 50–175A Split-core: 2–12, 12–55 or 50–200A (jumper selectable)
Hysteresis	5% (constant)
Isolation voltage	5000 Vac (tested)
Frequency range	50–100 Hz
Sensing aperture	Solid-core models: 0.75 in (19 mm) dia. Split-core models: 0.85 in (21.6 mm) sq.
Housing	UL94 V0 flammability rated
Environmental	Operating temperature: 5° to 122°F (–15° to 50°C) Humidity: 0–95% RH, non-condensing

Overload Ratings

		Maximum Amperes		
Housing	**Range**	**Continuous**	**Six Seconds**	**One Second**
Solid-core	1.5–175A	175A	400A	1000A
Split-core	2–200A	200A	400A	1000A

LED Indication/Output Status

	Output		
Monitored Amps	**NO**	**NC**	**Smart-LED (If Present)**
None or minimum	Open	Closed	Off
Below trip level	Open	Closed	Slow (2 sec.)
Above trip level	Closed	Open	Fast (0.5 sec.)

Note

① Sensor pictured for reference and not included in kit.

Wiring Diagram

ECSTD Series CurrentWatch Current Switches

Normally open (NO) models shown

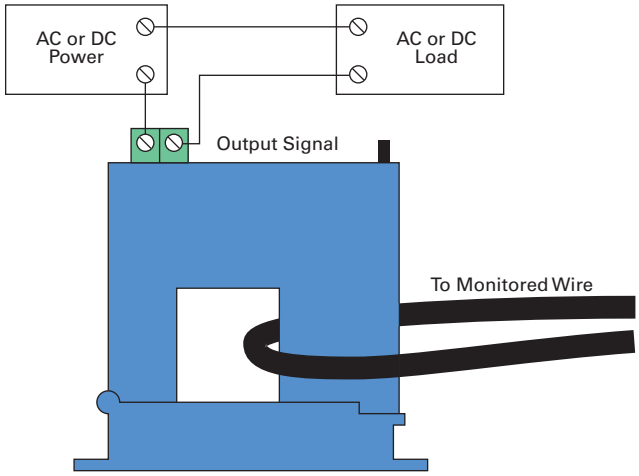

Dimensions

Approximate Dimensions in Inches (mm)

Solid-Core Housing

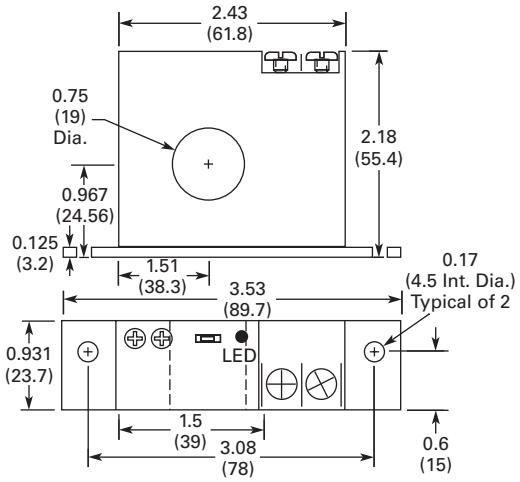

Split-Core Housing

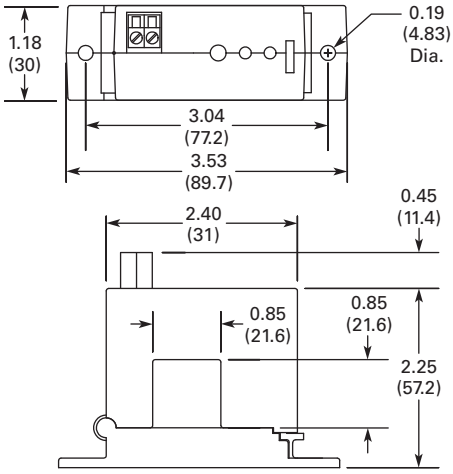

ECSD Series CurrentWatch Current Switches

Contents

Description	*Page*
ECSD Series CurrentWatch Current Switches	
Product Selection	**V8-T7-24**
Accessories	**V8-T7-24**
Technical Data and Specifications	**V8-T7-24**
Wiring Diagrams	**V8-T7-25**
Dimensions	**V8-T7-25**

ECSD Series CurrentWatch Current Switches

Product Description

The CurrentWatch ECSD Series current operated switches from Eaton's electrical sector provides the same dependable indication of status offered by the CurrentWatch ECS Series, but with the added benefit of increased setpoint precision. A choice of three jumper-selectable input ranges allow the ECSD Series to be tailored to an application, providing more precise control through improved setpoint resolution. Features such as isolated solid-state or mechanical relay outputs; 4-20A, 10-50A, and 20-100A input ranges are standard.

For typical applications of the CurrentWatch ECSD Series, see the listing on this page.

Application Description

Typical Applications

- **Electronic Proof of Flow**—Current operated switches eliminate the need for multiple pipe or duct penetrations and are more reliable than electromechanical pressure or flow switches
- **Welders**—Instant indication of equipment status
- **Large Drive Motors**—Provide monitoring for field loss protection
- **Power Supplies**—Detect and signal over-current condition before equipment damage
- **UPS**—Monitors battery output
- **Ancillary Equipment**

Features

- **Choice of Mechanical Relay or Solid-state Outputs**
  - SPDT (Form C) relay, 5.0A at 240 Vac or 30 Vdc
  - Solid-state, NO, 0.15A at 240 Vac/dc
- **Easily Adjustable Setpoint**—Speeds start-up and reduces inventory
- **Compact, One-Piece Design**—Easily fits in crowded control panels
- **Input Isolation**—Safer than shunt/relay combinations
- **Adaptive Hysteresis**—Hysteresis is five percent of setpoint, allowing closer control than fixed-hysteresis switches
- **Solid-Core Housings**
- **LED Indication**—Provides quick visual indication of output contact status
- **Built-In Mounting Feet**—Provide for a secure installation

Standards and Certifications

- UL Listed
- cUL Listed
- CE

Listed Listed

DANGER

THIS SENSOR IS NOT A SAFETY DEVICE AND IS NOT INTENDED TO BE USED AS A SAFETY DEVICE. This sensor is designed only to detect and read certain data in an electronic manner and perform no use apart from that, specifically no safety-related use. This sensor product does not include self-checking redundant circuitry, and the failure of this sensor product could cause either an energized or de-energized output condition, which could result in death, serious bodily injury, or property damage.

For the most current information on this product, visit our Web site: www.eaton.com

For Customer Service in the U.S. call 1-877-ETN CARE (386-2273), in Canada call 1-800-268-3578.
For Application Assistance in the U.S. and Canada call 1-800-426-9184.

Product Selection

ECSD Series CurrentWatch Current Switches

Solid-Core Housing with Top Terminal

Top Terminal Switches

Power Supply	Aperture Size	Output Type, Voltage and Rating	Setpoint and LED Configuration	Catalog Number
Solid-Core Housings with Top Terminal				
12 Vac/dc	0.74 in (19 mm)	Solid-state, normally open, 0.15A at 240 Vac/dc	Adjustable: 4–20, 10–50, 20–100A	**ECSD112SC**
		Mechanical relay, SPDT (Form C), 5.0A at 240 Vac, 30 Vdc		**ECSD212SC**
24 Vac/dc	0.74 in (19 mm)	Solid-state, normally open, 0.15A at 240 Vac/dc	Adjustable: 4–20, 10–50, 20–100A	**ECSD124SC**
		Mechanical relay, SPDT (Form C), 5.0A at 240 Vac, 30 Vdc		**ECSD224SC**

Accessories

DIN Rail Mounting Kit

ECSD Series CurrentWatch Current Switches

Description	Catalog Number
DIN rail mounting kit ①	**EDINKIT**

Technical Data and Specifications

ECSD Series CurrentWatch Current Switches

Description	Solid-State Output Models	Mechanical Relay Models
Power supply	12 Vac/dc (operates from 10–18 Vac/dc) 24 Vac/dc (operates from 20–28 Vac/dc)	12 Vac/dc (operates from 10–18 Vac/dc) 24 Vac/dc (operates from 20–28 Vac/dc)
Output	Isolated solid-state contact	Mechanical relay (SPDT)
Output rating	0.15A at 240 Vac/dc Normally open	5.0A at 240 Vac 5.0A at 30 Vdc
Off-state leakage	<10 µA	—
Response time	100 ms at 10% above setpoint 20 ms at 100% above setpoint	—
Setpoint range	Adjustable: 4–20, 10–50, 20–100A	—
Hysteresis	5% of setpoint	—
Overload	1000% of range for 5 sec.	—
Isolation voltage	3 kV	—
Frequency range	DC to 400 Hz	—
Sensing aperture	Solid-core, 0.74 in (19 mm)	—
Housing	UL94 V0 flammability rated	—
Environmental	Operating temperature: –40° to 140°F (–40° to 60°C) Humidity: 0–95% RH, non-condensing	Operating temperature: –4° to 122°F (–20° to 50°C) Humidity: 0–95% RH, non-condensing

Note

① Sensor pictured for reference and not included with kit.

Wiring Diagrams

Solid-State Output Models

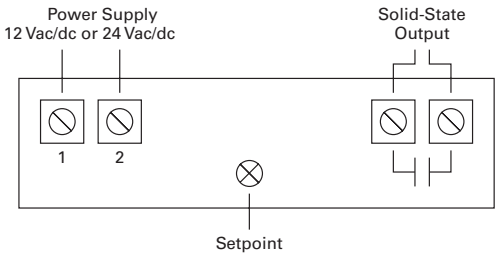

Mechanical Relay Models

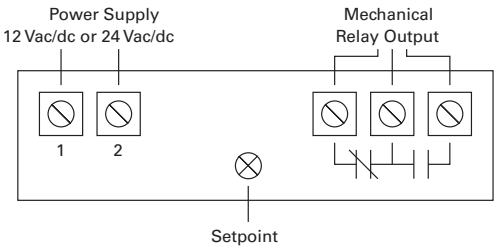

Dimensions

Approximate Dimensions in Inches (mm)

Solid-Core Models

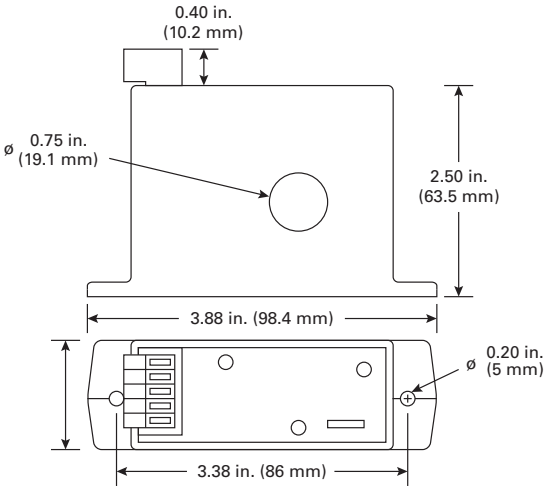

EAC Series CurrentWatch Current Sensors

Contents

Description	*Page*
EAC Series CurrentWatch Current Sensors	
Standards and Certifications	**V8-T7-27**
Product Selection	**V8-T7-27**
Accessories	**V8-T7-28**
Technical Data and Specifications	**V8-T7-28**
Wiring Diagrams	**V8-T7-29**
Dimensions	**V8-T7-29**

EAC Series CurrentWatch Current Sensors

Product Description

The CurrentWatch EAC Series from Eaton's electrical sector combines a current transformer and signal conditioner into a single package. The EAC Series has jumper-selected current input ranges and industry standard outputs: 4–20 mA, 0–5 Vdc or 0–10 Vdc. This family of sensors is designed for application on "linear" or sinu-soidal AC loads. Available in split-core or solid-core housings.

For typical applications of the CurrentWatch EAC Series, see listing on this page.

Application Description

Typical Applications

- **Automation Equipment**—Analog current reading for remote monitoring and software alarms
- **Data Loggers**—Self-powered sensor helps conserve data logger batteries
- **Panel Meters**—Simple connection displays power consumption

Example Application—
Preventative Maintenance of a Critical Lighting System

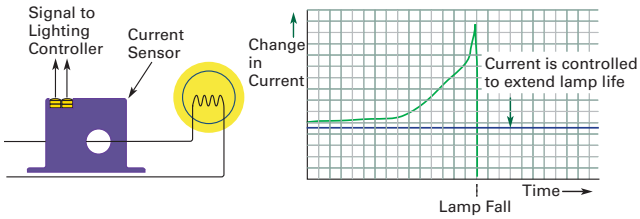

Features

- **Highly Accurate**—Factory matched and calibrated single-piece sensor is more accurate than traditional two-piece, field-installed solutions
- **Average Responding**—"Average Responding" algorithm gives an RMS output on pure sine waves, perfect for constant speed (linear) loads
- **Jumper Selectable Ranges**—The ability to change input ranges reduces inventory and eliminates zero and span
- **Isolation**—Output is magnetically isolated from the input for safety and elimination of insertion loss (voltage drop)
- **UL, cUL and CE Approved**—Accepted worldwide

For the most current information on this product, visit our Web site: www.eaton.com

For Customer Service in the U.S. call 1-877-ETN CARE (386-2273), in Canada call 1-800-268-3578.
For Application Assistance in the U.S. and Canada call 1-800-426-9184.

Standards and Certifications ①

- UL Listed
- cUL Listed
- CE Certified
- UL 508 Industrial Control Equipment (USA and Canada)

Listed Listed

DANGER

THIS SENSOR IS NOT A SAFETY DEVICE AND IS NOT INTENDED TO BE USED AS A SAFETY DEVICE. This sensor is designed only to detect and read certain data in an electronic manner and perform no use apart from that, specifically no safety-related use. This sensor product does not include self-checking redundant circuitry, and the failure of this sensor product could cause either an energized or de-energized output condition, which could result in death, serious bodily injury, or property damage.

Product Selection

EAC Series CurrentWatch Current Sensors

Top Terminal Current Sensors

	Power Supply	Aperture Size	Output Signal	Current Range	Catalog Number
Solid-Core Housing	**Solid-Core Housings**				
	Self-powered (no external power needed)	0.74 in (19 mm)	0–5 Vdc	10, 20 or 50A	**EAC105SC**
				100, 150 or 200A	**EAC205SC**
			0–10 Vdc	10, 20 or 50A	**EAC110SC**
				100, 150 or 200A	**EAC210SC**
	24 Vdc loop-powered		4–20 mA	2 or 5A	**EAC0420SC**
				10, 20 or 50A	**EAC1420SC**
				100, 150 or 200A	**EAC2420SC**
Split-Core Housing	**Split-Core Housings—Self-Powered and 24 Vdc**				
	Self-powered (no external power needed)	0.85 in (21.6 mm)	0–5 Vdc	10, 20 or 50A	**EAC105SP**
				100, 150 or 200A	**EAC205SP**
			0–10 Vdc	10, 20 or 50A	**EAC110SP**
				100, 150 or 200A	**EAC210SP**
	24 Vdc loop-powered		4–20 mA	2 or 5A	**EAC0420SP**
				10, 20 or 50A	**EAC1420SP**
				100, 150 or 200A	**EAC2420SP**
Split-Core Housing	**Split-Core Housings—120 Vac and 24 Vac/dc**				
	120 Vac	0.85 in (21.6 mm)	4–20 mA	2 or 5A	**EACP0420120SP** ②
				10, 20 or 50A	**EACP1420120SP** ②
				100, 150 or 200A	**EACP2420120SP** ②
	24 Vac/dc		4–20 mA	2 or 5A	**EACP042024USP** ②
				10, 20 or 50A	**EACP142024USP** ②
				100, 150 or 200A	**EACP242024USP** ②

Notes

① EACP models not listed.

② Not UL listed.

Accessories

DIN Rail Mounting Kit

EAC Series CurrentWatch Current Sensors

Description	Catalog Number
DIN rail mounting kit ①	**EDINKIT**

Technical Data and Specifications

EAC Series CurrentWatch Current Sensors

Description	Models with 0–5 Vdc Output Specification	Models with 0–10 Vdc Output Specification	Models with 4–20 mA Output Specification	EACP Series Only Specification
Power supply	Self-powered—no power supply needed	Self-powered—no power supply needed	12–40 Vdc loop-powered	Models ending -0SP: 120 Vac Models ending -USP: 24 Vac/dc (40V maximum)
Output signal	0–5 Vdc	0–10 Vdc	4–20 mA	4–20 mA
Output limit	8.2 Vdc	15 Vdc	23 mA	22.4 mA
Accuracy	1.0% FS	1.0% FS	1.0% FS	1% FS
Response time	100 ms	100 ms	300 ms	100 ms
Frequency range	50–60 Hz	50–60 Hz	20–100 Hz	40–100 Hz
Loading	1M ohm minimum rated accuracy 100 kohms, add 1.3% error	1M ohm minimum rated accuracy 100 kohms, add 1.3% error	See power supply above	50 kohms minimum 500 kohms maximum
Isolation voltage	UL listed to 1270 Vac (tested to 5kV)	UL listed to 1270 Vac (tested to 5kV)	UL listed to 1270 Vac (tested to 5kV)	UL listed to 1270 Vac (tested to 5kV)
Input ranges	Field selectable ranges from 0–200A ③	Field selectable ranges from 0–200A ③	Field selectable ranges from 0–200A ③	0–200A jumper selectable
Sensing aperture	Solid-core: 0.74 in (19 mm) dia. Split-core: 0.85 in (21.6 mm) sq.	Solid-core: 0.74 in (19 mm) dia. Split-core: 0.85 in (21.6 mm) sq.	Solid-core: 0.74 in (19 mm) dia. Split-core: 0.85 in (21.6 mm) sq.	0.85 in (21.6 mm)
Housing	UL94 V0 flammability rated	UL94 V0 flammability rated	UL94 V0 flammability rated	UL94 V0 flammability rated
Environmental	Operating temperature: –4° to 122°F (–20° to 50°C) Humidity: 0–95% RH, non-condensing	Operating temperature: –4° to 122°F (–20° to 50°C) Humidity: 0–95% RH, non-condensing	Operating temperature: –4° to 122°F (–20° to 50°C) Humidity: 0–95% RH, non-condensing	Operating temperature: –4° to 122°F (–20° to 50°C) Humidity: 0–95% RH, non-condensing

Notes

① Sensor pictured for reference and not included in kit.
② Does not apply to EACP series.
③ Additional custom ranges available from factory.

Wiring Diagrams

EACP Models

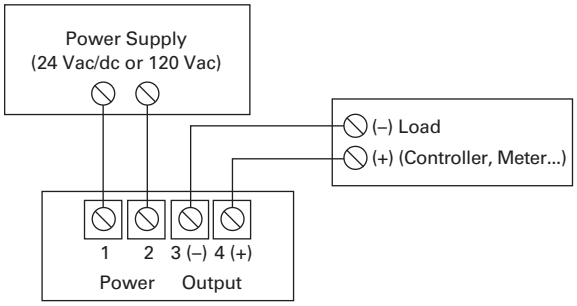

All Other Models ①

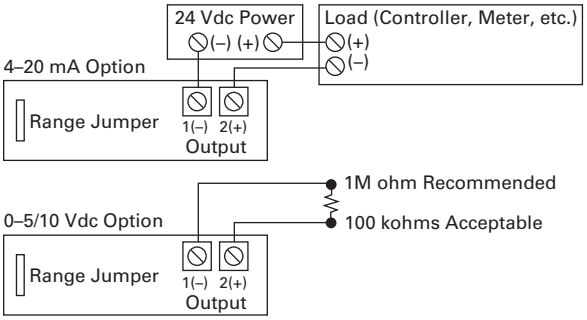

Dimensions

Approximate Dimensions in Inches (mm)

Solid-Core Housing

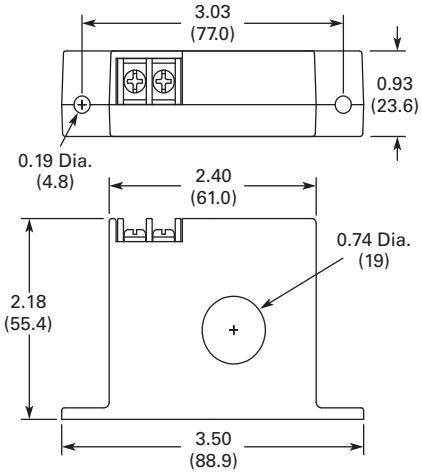

EACP Series

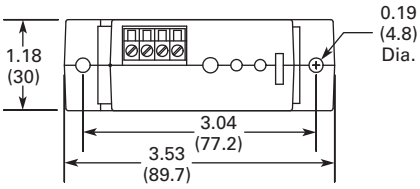

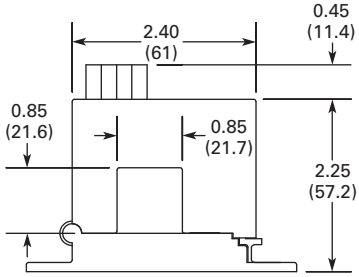

All Other Models

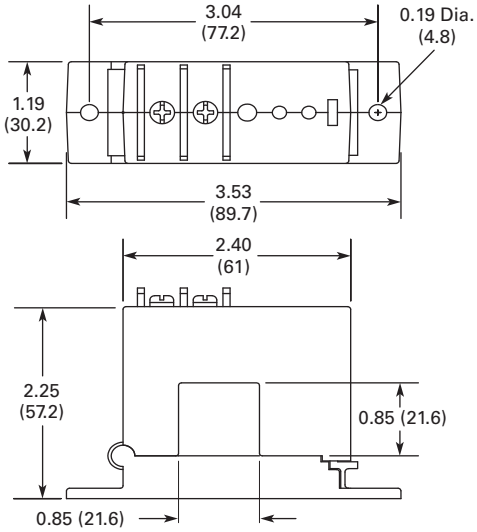

Note

① Pressure plate screw terminals.
12–22 AWG solid or stranded.
Field adjustable setpoint.

EACR Series CurrentWatch Current Sensors

Contents

Description	*Page*
EACR Series CurrentWatch Current Sensors	
Standards and Certifications	**V8-T7-31**
Product Selection	**V8-T7-31**
Accessories	**V8-T7-31**
Technical Data and Specifications	**V8-T7-32**
Wiring Diagram	**V8-T7-32**
Dimensions	**V8-T7-32**

EACR Series CurrentWatch Current Sensors

Product Description

The CurrentWatch EACR Series current sensor family from Eaton's electrical sector combines a current sensor and a "True RMS" signal conditioner into a single package. The EACR Series provides True RMS output on distorted waveforms found on VFD or SCR outputs, and on linear loads in "noisy" power environments. Available in solid- or split-core housings.

For typical applications of the CurrentWatch EACR Series, see listing on this page.

Application Description

Typical Applications

- **VFD Controlled Loads**—Monitoring VFD output indicates how the motor and attached load are operating
- **SCR Controlled Loads**—Accurate measurement of phase angle fired or burst fired (time proportioned) SCRs, with faster current measurement than temperature sensors
- **Switching Power Supplies and Electronic Ballasts**—True RMS sensing is the most accurate way to measure power supply or ballast input power

Example Application—Current Sensing for Non-Linear AC Loads

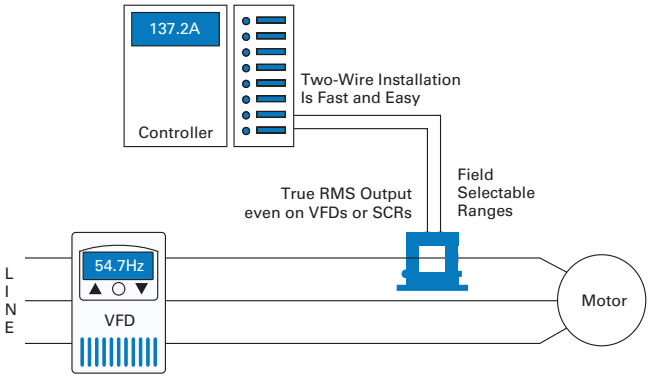

Why "True RMS"?

The current waveform of a typical linear load is a pure sine wave. In VFD and SCR applications, however, output waveforms are rough approximations of a sine wave. There are numerous spikes and dips in each cycle. The CurrentWatch EACR Series current sensors use a mathematical algorithm called "True RMS" which integrates the actual waveform over time. The output is the amperage component of the true power (heating value) of the AC current waveform. True RMS is the only way to accurately measure distorted AC waveforms. Select the EACR Series sensors for nonlinear loads in "noisy" power environments.

Features

- **True RMS Output**—True RMS technology is accurate on distorted waveforms like VFD or SCR outputs
- **Jumper-Selectable Ranges**—Reduces inventory and eliminates zero and span
- **Isolation**—Output is magnetically isolated from the input for safety and elimination of insertion loss (voltage drop)
- **UL, cUL and CE Approved**—Accepted worldwide

For the most current information on this product, visit our Web site: www.eaton.com

For Customer Service in the U.S. call 1-877-ETN CARE (386-2273), in Canada call 1-800-268-3578.
For Application Assistance in the U.S. and Canada call 1-800-426-9184.

Standards and Certifications

- UL Listed
- cUL Listed
- CE Certified
- UL 508 Industrial Control Equipment (USA and Canada)

Listed Listed

DANGER

THIS SENSOR IS NOT A SAFETY DEVICE AND IS NOT INTENDED TO BE USED AS A SAFETY DEVICE. This sensor is designed only to detect and read certain data in an electronic manner and perform no use apart from that, specifically no safety-related use. This sensor product does not include self-checking redundant circuitry, and the failure of this sensor product could cause either an energized or de-energized output condition, which could result in death, serious bodily injury, or property damage.

Product Selection

EACR Series CurrentWatch Current Sensors

Top Terminal Current Sensors

	Power Supply	Aperture Size	Output Signal	Current Range	Catalog Number
Solid-Core Housing	**Solid-Core Housing**				
	24 Vdc loop-powered	0.74 in (19 mm)	4–20 mA	2 or 5A	**EACR0420SC**
				10, 20 or 50A	**EACR1420SC**
				100, 150 or 200A	**EACR2420SC**
Split-Core Housing	**Split-Core Housing**				
	24 Vdc loop-powered	0.85 in (21.6 mm)	4–20 mA	2 or 5A	**EACR0420SP**
				10, 20 or 50A	**EACR1420SP**
				100, 150 or 200A	**EACR2420SP**

Accessories

DIN Rail Mounting Kit

EACR Series CurrentWatch Current Sensors

Description	Catalog Number
DIN rail mounting kit ①	**EDINKIT**

Note

① Sensor pictured for reference and not included in kit.

Technical Data and Specifications

EACR Series CurrentWatch Current Sensors

Description	Specification
Power supply	24 Vdc loop-powered, 40 Vdc maximum
Output signal	4–20 mA
Output limit	23 mA
Accuracy	1.0% FS
Response time	600 ms (to 90% step change)
Frequency range	10–400 Hz
Isolation voltage	UL listed to 1270 Vac (Tested to 5 kV)
Input ranges	Field selectable ranges from 0–200A ①
Sensing aperture	Solid-core: 0.74 in (19 mm) dia. Split-core: 0.85 in (21.6 mm) sq.
Housing	UL94 V0 flammability rated
Environmental	Operating temperature: –4° to 122°F (–20° to 50°C) Humidity: 0–95% RH, non-condensing

Wiring Diagram

EACR Series CurrentWatch Current Sensors ②

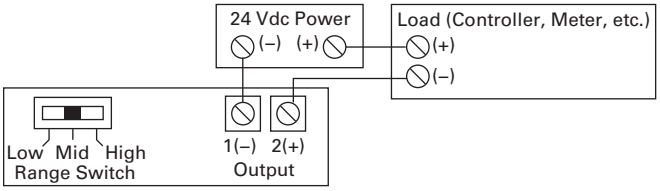

Dimensions

Approximate Dimensions in Inches (mm)

Solid-Core Housing

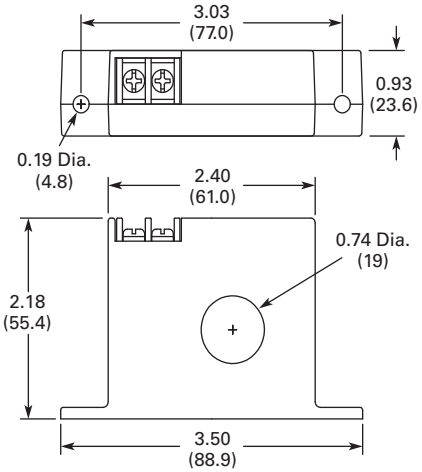

Split-Core Housing

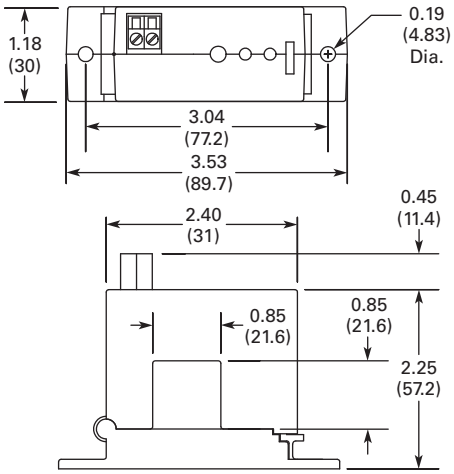

Notes

① Additional custom ranges available from factory.

② Deadfront captive screw terminals (split-core housing models only).
12–22 AWG solid or stranded.
Observe polarity.

EDC Series CurrentWatch Current Sensors

Contents

Description	*Page*
EDC Series CurrentWatch Current Sensors	
Standards and Certifications	**V8-T7-34**
Product Selection	**V8-T7-34**
Accessories	**V8-T7-35**
Technical Data and Specifications	**V8-T7-35**
Wiring Diagram	**V8-T7-36**
Dimensions	**V8-T7-36**

EDC Series CurrentWatch Current Sensors

Product Description

The CurrentWatch EDC Series from Eaton's electrical sector combines a hall effect sensor and signal conditioner into a single package for use in DC current applications up to 300A. The EDC Series has jumper-selected current input ranges and industry standard outputs: 4–20 mA, 0–5 Vdc or 0–10 Vdc. Available in split-core models for quick and easy installation.

For typical applications of the CurrentWatch EDC Series, see listing on this page.

Application Description

Typical Applications

- **Battery Banks**—Monitor load current, monitor charging current and verify operation
- **Transportation**—Measures traction power or auxiliary loads
- **Electric Heating Elements**—Monitor heater loads with a faster response time than temperature sensors

Example Application—Battery Charging System

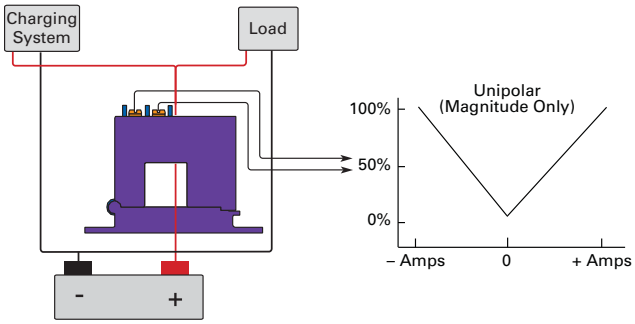

Features

- **Jumper-Selectable Ranges**—Reduce inventory and eliminate zero or span pots
- **Isolation**—Output is magnetically isolated from the input for safety, also eliminating insertion loss (voltage drop)
- **Internal Power Regulation**—Cuts installation costs and works well, even with unregulated power
- **Split Core Design and Built-In Mounting Brackets**—Make installation quick and easy
- **UL and CE Approved**

For the most current information on this product, visit our Web site: www.eaton.com

For Customer Service in the U.S. call 1-877-ETN CARE (386-2273), in Canada call 1-800-268-3578.
For Application Assistance in the U.S. and Canada call 1-800-426-9184.

Standards and Certifications

- UL Listed
- cUL Listed
- CE Certified
- UL 508 Industrial Control Equipment (USA and Canada)

Listed Listed

DANGER

THIS SENSOR IS NOT A SAFETY DEVICE AND IS NOT INTENDED TO BE USED AS A SAFETY DEVICE. This sensor is designed only to detect and read certain data in an electronic manner and perform no use apart from that, specifically no safety-related use. This sensor product does not include self-checking redundant circuitry, and the failure of this sensor product could cause either an energized or de-energized output condition, which could result in death, serious bodily injury, or property damage.

Product Selection

EDC Series CurrentWatch Current Sensors

Top Terminal Current Sensors

	Power Supply	Aperture Size	Output Signal	Current Range	Catalog Number
Split-Core Housing	**Split-Core Housing—Uni-Polar Output, see Output Graph on Page V8-T7-35**				
	24 Vac/dc	0.85 in (21.6 mm)	0–5 Vdc	50, 75 or 100A	**EDC205SP**
				100, 150 or 200A	**EDC305SP**
				150, 225 or 300A	**EDC405SP**
			0–10 Vdc	50, 75 or 100A	**EDC210SP**
				100, 150 or 200A	**EDC310SP**
				150, 225 or 300A	**EDC410SP**
			4–20 mA	50, 75 or 100A	**EDC2420SP**
				100, 150 or 200A	**EDC3420SP**
				150, 225 or 300A	**EDC4420SP**
Split-Core Housing	**Split-Core Housing—Bidirectional Output, see Output Graph on Page V8-T7-35**				
	24 Vac/dc	0.85 in (21.6 mm)	–10 to +10 Vdc	0–100A	**EDCB100SP**
				0–200A	**EDCB200SP**
				0–300A	**EDCB300SP**
				0–400A	**EDCB400SP**
Solid-Core Housing	**Solid-Core Housing—Single-Polarity Output, see Output Graph on Page V8-T7-35**				
	24 Vac/dc	0.75 in (19 mm)	4–20 mA	5, 10 or 20A	**EDC1420SC**

Accessories

DIN Rail Mounting Kit

CurrentWatch EDC Series

Description	Catalog Number
DIN rail mounting kit ①	**EDINKIT**

Technical Data and Specifications

EDC Series CurrentWatch Current Sensors

Description	Models with 0–5 Vdc Output Specification	Models with 0–10 Vdc Output Specification	Models with 4–20 mA Output Specification
Power supply	24 Vac/dc (22–38 Vac/dc) 2 VA maximum	24 Vac/dc (22–38 Vac/dc) 2 VA maximum	24 Vac/dc (22–38 Vac/dc) 2 VA maximum
Output signal	0–5 Vdc	0–10 Vdc	4–20 mA
Output limit	5.75 Vdc	11.5 Vdc	23 mA
Accuracy	Solid-core models: 1% FS Split-core models: 2% FS 300A models: 1.5% FS	Solid-core models: 1% FS Split-core models: 2% FS 300A models: 1.5% FS	Solid-core models: 1% FS Split-core models: 2% FS 300A models: 1.5% FS
Response time	Solid-core models: 20 ms (to 90% of step change) Split-core models: 100 ms (to 90% of step change)	Solid-core models: 20 ms (to 90% of step change) Split-core models: 100 ms (to 90% of step change)	Solid-core models: 20 ms (to 90% of step change) Split-core models: 100 ms (to 90% of step change)
Frequency range	DC	DC	DC
Loading	25 kohms minimum	50 kohms minimum	650 ohms maximum
Isolation voltage	3 kV (monitored line to output)	3 kV (monitored line to output)	3 kV (monitored line to output)
Linearity	0.75% FS	0.75% FS	0.75% FS
Current ranges	Field selectable ranges from 0–300A	Field selectable ranges from 0–300A	Field selectable ranges from 0–300A
Sensing aperture	Solid-core housings: 0.75 in (19 mm) dia. Split-core housings: 0.85 in (21.6 mm) sq.	Solid-core housings: 0.75 in (19 mm) dia. Split-core housings: 0.85 in (21.6 mm) sq.	Solid-core housings: 0.75 in (19 mm) dia. Split-core housings: 0.85 in (21.6 mm) sq.
Environmental	Operating temperature: –4° to 122°F (–20° to 50°C) Humidity: 0–95% RH, non-condensing	Operating temperature: –4° to 122°F (–20° to 50°C) Humidity: 0–95% RH, non-condensing	Operating temperature: –4° to 122°F (–20° to 50°C) Humidity: 0–95% RH, non-condensing

Output Graphs

Uni-Poler Output for Split-Core

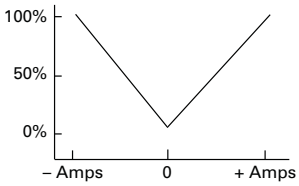

Bidirectional Output for Split-Core

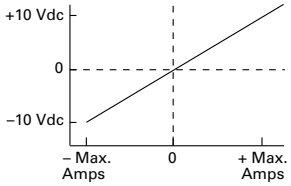

Standard Analog Output for Solid-Core

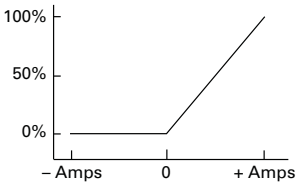

Note

① Sensor pictured for reference and not included in kit.

Wiring Diagram

EDC Series CurrentWatch Current Sensors

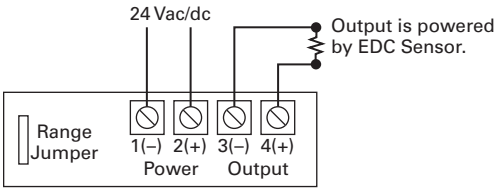

Dimensions

Approximate Dimensions in Inches (mm)

Split-Core Housing

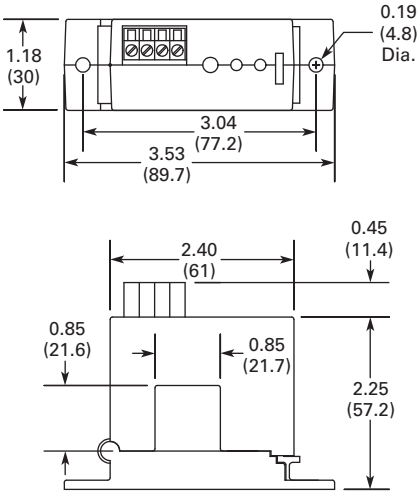

Solid-Core Housing

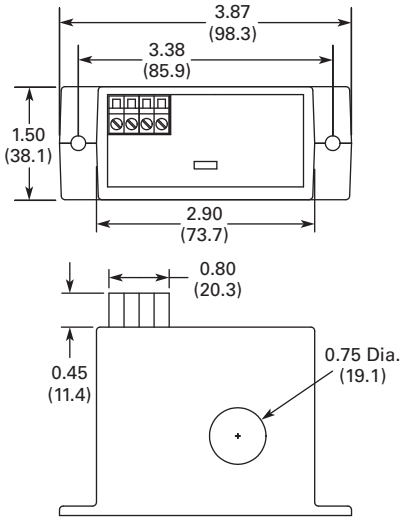

EGF Series CurrentWatch Current Sensors

Contents

Description	*Page*
EGF Series CurrentWatch Current Sensors	
Features	**V8-T7-38**
Standards and Certifications	**V8-T7-38**
Product Selection	**V8-T7-38**
Accessories	**V8-T7-39**
Technical Data and Specifications	**V8-T7-40**
Wiring Diagrams	**V8-T7-41**
Dimensions	**V8-T7-41**

EGF Series CurrentWatch Current Sensors

Product Description

The CurrentWatch EGF Series from Eaton's electrical sector is a family of ground fault (earth leakage) sensors. Ground fault sensors help protect people, products and processes from damage by ground fault conditions by monitoring all current-carrying conductors in grounded single- and three-phase delta or wye systems.

The EGF Series with solid-state outputs offers the benefit of reliable, long-lasting solid-state switches. Solid-state design provides unlimited switch operating life, superior resistance to shock and vibration, zero off-state leakage, high switch speeds and high input-output isolation.

The EGF Series with mechanical relay outputs is available in solid-core housings with a choice of NO or NC SPST latching relays and a SPDT Form C relay with auto-reset.

Application Description

Typical Applications

- **Personnel Protection (Typically 5 mA)**—Detects sensitive ground fault conditions, which could cause injury to people, and functions as a sensor and alarm trigger when applied as an input to an overall ground fault protection system
- **Equipment Protection (Typically 10 or 30 mA)**—For applications where personnel protection is not the primary concern, higher setpoint capability helps eliminate nuisance tripping while still providing adequate ground fault detection to protect machine electronics
- **Regulatory**—Meets requirements as stipulated by governmental and industrial regulatory groups for ground fault sensing

Example Application—Insulation Breakdown Monitoring

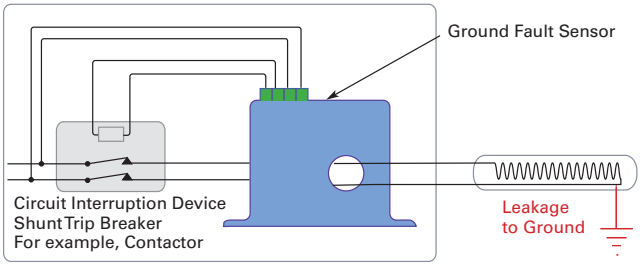

"Zero Sequence" Operating Principle

In three-phase delta and wye systems, under normal conditions, current in the "hot" leg of a two-wire load is equal in magnitude but opposite in sign to the current in a neutral leg. As a result, the electromagnetic fields surrounding these two conductors cancel, producing a "zero sum current." As soon as current leaks to ground (fault condition), the two currents become imbalanced and a net magnetic field results. The CurrentWatch EGF Series sensors monitor this field and trip the contacts when the leakage rises above the setpoint.

For the most current information on this product, visit our Web site: www.eaton.com

For Customer Service in the U.S. call 1-877-ETN CARE (386-2273), in Canada call 1-800-268-3578.
For Application Assistance in the U.S. and Canada call 1-800-426-9184.

Features

- **Broad Range of Options to Meet Application Needs**—NO or NC, solid-state or mechanical relays, normally energized or normally de-energized contacts
- **Setpoint Options Maximize Ease-of-Use and Application Flexibility**—Field selectable 5, 10 or 30 mA setpoints on the EGF "tri-set" models make user adjustments fast, sure and convenient
- **Compatible with Standard Equipment**—Application on single- and three-phases systems, ideal for use with shunt trip breakers, and magnetically isolated from monitored circuit and control power
- **Agency Approved**—UL and CE Certified, accepted worldwide

Standards and Certifications

- UL 1053, Class 1 Recognized
- CE

DANGER

THIS SENSOR IS NOT A SAFETY DEVICE AND IS NOT INTENDED TO BE USED AS A SAFETY DEVICE. This sensor is designed only to detect and read certain data in an electronic manner and perform no use apart from that, specifically no safety-related use. This sensor product does not include self-checking redundant circuitry, and the failure of this sensor product could cause either an energized or de-energized output condition, which could result in death, serious bodily injury, or property damage.

Product Selection

EGF Series CurrentWatch Current Sensors

Solid-State Output Sensors

Solid-Core Housing

Power Supply	Setpoint	AC Solid-State Output	DC Solid-State Output	Contacts	Catalog Number
Solid-Core Housings					
120 Vac	Fixed, 50 mA	Solid-state, NO, 1A at 240 Vac	—	Normally energized	**EGF1NOACNE050**
				Normally de-energized	**EGF1NOACDE050**
		Solid-state, NC, 1A at 240 Vac	—	Normally energized	**EGF1NCACNE050**
				Normally de-energized	**EGF1NCACDE050**
		—	Solid-state, NO, 0.15A at 30 Vdc	Normally energized	**EGF1NODCNE050**
				Normally de-energized	**EGF1NODCDE050**
		—	Solid-state, NC, 0.15A at 30 Vdc	Normally energized	**EGF1NCDCNE050**
				Normally de-energized	**EGF1NCDCDE050**
120 Vac	Fixed, 100 mA	Solid-state, NO, 1A at 240 Vac	—	Normally energized	**EGF1NOACNE100**
				Normally de-energized	**EGF1NOACDE100**
		Solid-state, NC, 1A at 240 Vac	—	Normally energized	**EGF1NCACNE100**
				Normally de-energized	**EGF1NCACDE100**
		—	Solid-state, NO, 0.15A at 30 Vdc	Normally energized	**EGF1NODCNE100**
				Normally de-energized	**EGF1NODCDE100**
		—	Solid-state, NC, 0.15A at 30 Vdc	Normally energized	**EGF1NCDCNE100**
				Normally de-energized	**EGF1NCDCDE100**
120 Vac	Tri-set adjustable, 5, 10 or 30 mA	Solid-state, NO, 1A at 240 Vac	—	Normally energized	**EGF3NOACNET3**
				Normally de-energized	**EGF3NOACDET3**
		Solid-state, NC, 1A at 240 Vac	—	Normally energized	**EGF3NCACNET3**
				Normally de-energized	**EGF3NCACDET3**
		—	Solid-state, NO, 0.15A at 30 Vdc	Normally energized	**EGF3NODCNET3**
				Normally de-energized	**EGF3NODCDET3**
		—	Solid-state, NC, 0.15A at 30 Vdc	Normally energized	**EGF3NCDCNET3**
				Normally de-energized	**EGF3NCDCDET3**

Mechanical Relay Output Sensors

Solid-Core Housing

Power Supply	Setpoint	Mechanical Relay Output	Contacts	Catalog Number
Solid-Core Housings				
120 Vac	Fixed, 50 mA	Mechanical relay, NO SPST relay, Form A (1A at 120 Vac)	Latching relay	**EGF1NOLA050**
		Mechanical relay, NC SPST relay, Form B (1A at 120 Vac)	Latching relay	**EGF1NCLA050**
		Mechanical relay, SPDT Form C, auto-reset (1A at 120 Vac)	Normally energized	**EGF1SPDTNE050**
			Normally de-energized	**EGF1SPDTDE050**
	Fixed, 100 mA	Mechanical relay, NO SPST relay, Form A (1A at 120 Vac)	Latching relay	**EGF1NOLA100**
		Mechanical relay, NC SPST relay, Form B (1A at 120 Vac)	Latching relay	**EGF1NCLA100**
		Mechanical relay, SPDT Form C, auto-reset (1A at 120 Vac)	Normally energized	**EGF1SPDTNE100**
			Normally de-energized	**EGF1SPDTDE100**
	Tri-set adjustable, 5, 10 or 30 mA	Mechanical relay, NO SPST relay, Form A (1A at 120 Vac)	Latching relay	**EGF1NOLAT3**
		Mechanical relay, NC SPST relay, Form B (1A at 120 Vac)	Latching relay	**EGF1NCLAT3**
		Mechanical relay, SPDT Form C, auto-reset (1A at 120 Vac)	Normally energized	**EGF1SPDTNET3**
			Normally de-energized	**EGF1SPDTDET3**
24 Vac/dc	Fixed, 50 mA	Mechanical relay, NO SPST relay, Form A (2A at 30 Vdc)	Latching relay	**EGF2NOLA050**
		Mechanical relay, NC SPST relay, Form B (2A at 30 Vdc)	Latching relay	**EGF2NCLA050**
		Mechanical relay, SPDT Form C, auto-reset (2A at 30 Vdc)	Normally energized	**EGF2SPDTNE050**
			Normally de-energized	**EGF2SPDTDE050**
	Fixed, 100 mA	Mechanical relay, NO SPST relay, Form A (2A at 30 Vdc)	Latching relay	**EGF2NOLA100**
		Mechanical relay, NC SPST relay, Form B (2A at 30 Vdc)	Latching relay	**EGF2NCLA100**
		Mechanical relay, SPDT Form C, auto-reset (2A at 30 Vdc)	Normally energized	**EGF2SPDTNE100**
			Normally de-energized	**EGF2SPDTDE100**
	Tri-set adjustable, 5, 10 or 30 mA	Mechanical relay, NO SPST relay, Form A (2A at 30 Vdc)	Latching relay	**EGF2NOLAT3**
		Mechanical relay, NC SPST relay, Form B (2A at 30 Vdc)	Latching relay	**EGF2NCLAT3**
		Mechanical relay, SPDT Form C, auto-reset (2A at 30 Vdc)	Normally energized	**EGF2SPDTNET3**
			Normally de-energized	**EGF2SPDTDET3**

Accessories

DIN Rail Mounting Kit

EGF Series CurrentWatch Current Sensors

Description	Catalog Number
DIN rail mounting kit ①	**EDINKIT**

Note

① Sensor pictured for reference and not included in kit.

Technical Data and Specifications

EGF Series CurrentWatch Current Sensors

Description	Solid-State Output Models Specification	Mechanical Relay Output Models Specification
Power supply	120 Vac (55–110% of nominal voltage) 24 Vac/dc (± 20%)	120 Vac (55–110% of nominal voltage) 24 Vac/dc (± 20%)
Output contact type	Isolated dry contact	Mechanical relay
Output rating (switching current and switching voltage)	AC output switching models: 1A at 240 Vac DC output switching models: 0.15A at 30 Vdc	Auto reset models, SPDT relay: 1A at 120 Vac; 2A at 30 Vdc Latching models, SPST relay: 1A at 120 Vac; 2A at 30 Vdc
Off-state leakage	NO models: <10 µA NC models: <2.5 mA	None
Response time	200 ms at 5% above trip point 60 ms at 50% above trip point 15 ms at 500% above trip point	200 ms at 5% above trip point 60 ms at 50% above trip point 15 ms at 500% above trip point
Frequency range	50–400 Hz (monitored circuit)	50–400 Hz (monitored circuit)
Loading	2 VA maximum	2 VA maximum
Isolation voltage	5000 Vac (tested)	5000 Vac (tested)
Sensing aperture	0.74 in (19 mm) diameter	0.74 in (19 mm) diameter
LED indicator	Green LED for power ON status; red LED for contact status	Green LED for power ON status; red LED for contact status
Housing	UL94 V0 flammability rated	UL94 V0 flammability rated
Environmental	Operating temperature: –4° to 122°F (–20° to 50°C) Humidity: 0–95% RH, non-condensing	Operating temperature: –4° to 122°F (–20° to 50°C) Humidity: 0–95% RH, non-condensing

Output Tables

Protection from faults and control power loss.

Normally Energized Models

		Control Power Applied	
	No Power	**No Fault**	**Fault**
Normally open models	Open	Closed	Open
Normally closed models	Closed	Open	Closed

Normally De-Energized Models

		Control Power Applied	
	No Power	**No Fault**	**Fault**
Normally open models	Open	Open	Closed
Normally closed models	Closed	Closed	Open

Latching (Mechanical Relay Output) Models

Latching models power up initially in the rest (normal) mode. If there is a fault condition or the test button is pushed, the output contacts will change state and latch.

The output will remain latched regardless of whether the fault is cleared or control power is removed. To reset the output, apply a momentary contact across "reset" terminals.

Wiring Diagrams

Solid-State Output Models

All Models

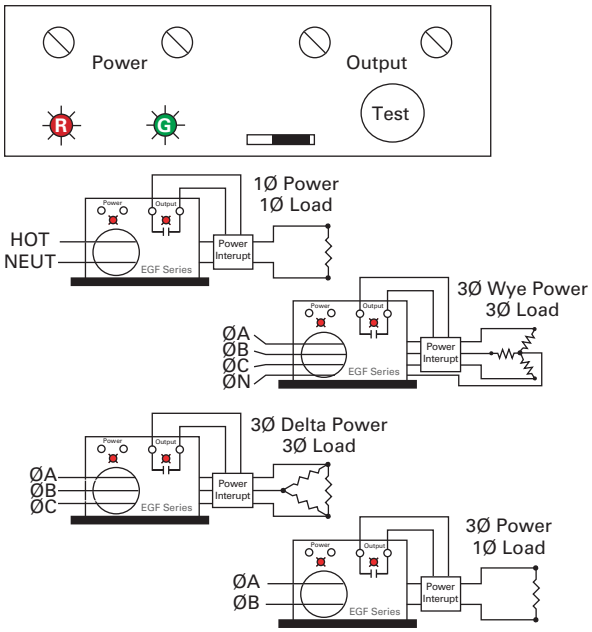

Mechanical Relay Output Models

Latching Models

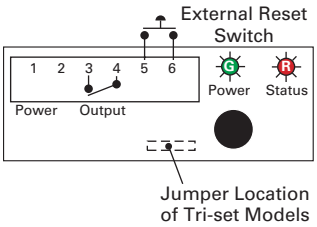

Auto Reset Models

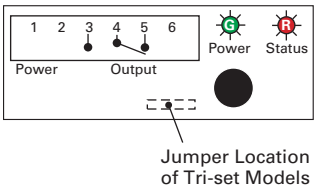

Dimensions

Approximate Dimensions in Inches (mm)

Solid-State Output Models

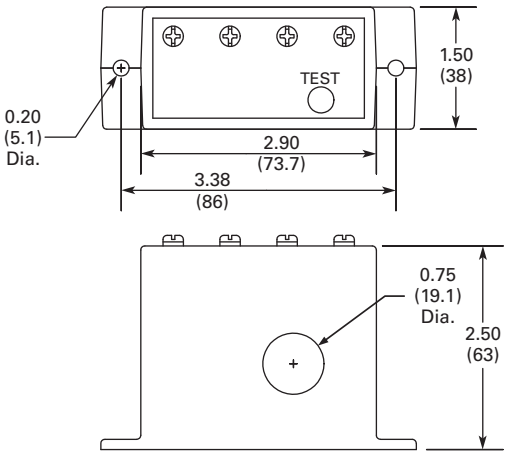

Mechanical Relay Models

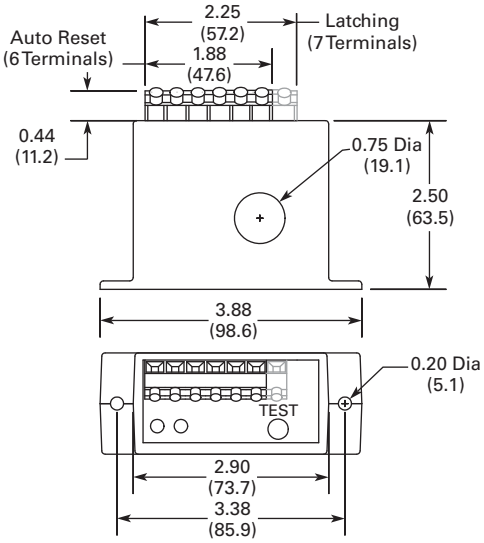

EGFL Series CurrentWatch Current Sensors

Contents

Description	*Page*
EGFL Series CurrentWatch Current Sensors	
Features	**V8-T7-43**
Standards and Certifications	**V8-T7-38**
Product Selection	**V8-T7-43**
Technical Data and Specifications	**V8-T7-43**
Wiring Diagrams	**V8-T7-44**
Dimensions	**V8-T7-44**

EGFL Series CurrentWatch Current Sensors

Product Description

The CurrentWatch EGFL Series from Eaton's electrical sector is a family of ground fault (earth leakage) sensors. Ground fault sensors help protect people, products and processes from damage by ground fault conditions by monitoring all current-carrying conductors in grounded single- and three-phase delta or wye systems. For more information, see "Zero Sequence" Operating Principle on this page. The EGFL Series is available with either solid-state or mechanical relay outputs.

The EGFL Series with mechanical relays are available in solid-core housings with a choice of NO or NC SPST latching relays and a SPDT Form C relay with auto-reset. All mechanical models can be ordered with a fixed setpoint or with a "tri-set" option, which provides three factory-set, field adjustable setpoints.

Application Description

Typical Applications

- **Personnel Protection (Typically 5 mA)**—Detects sensitive ground fault conditions, which could cause injury to people, and functions as a sensor and alarm trigger when part of an overall ground fault protection system
- **Equipment Protection (Typically 10 or 30 mA)**—For applications where personnel protection is not the primary concern, higher setpoint capability helps eliminate nuisance tripping while still providing adequate ground fault detection to protect machine electronics
- **Regulatory**—Meets requirements as stipulated by governmental and industrial regulatory groups for ground fault sensing

Example Application—Insulation Breakdown Monitoring

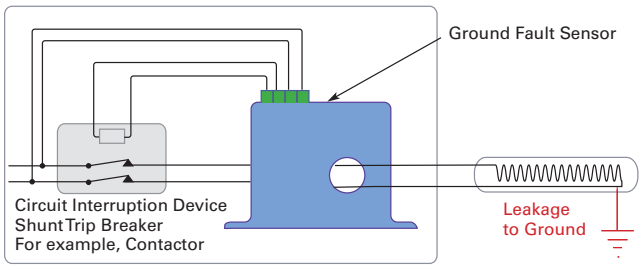

"Zero Sequence" Operating Principle

In three-phase delta and wye systems, under normal conditions, current in the "hot" leg of a two-wire load is equal in magnitude but opposite in sign to the current in a neutral leg. As a result, the electromagnetic fields surrounding these two conductors cancel, producing a "zero sum current." As soon as current leaks to ground (fault condition), the two currents become imbalanced and a net magnetic field results. The CurrentWatch EGFL Series sensors monitor this field and trip alarm contacts when the leakage rises above the setpoint.

For the most current information on this product, visit our Web site: www.eaton.com

For Customer Service in the U.S. call 1-877-ETN CARE (386-2273), in Canada call 1-800-268-3578.
For Application Assistance in the U.S. and Canada call 1-800-426-9184.

Features

- **Broad Range of Options to Meet Application Needs**—Mechanical relays, normally energized or normally de-energized contacts
- **Setpoint Options Maximize Ease-of-Use and Application Flexibility**—Field selectable 5, 10 or 30 mA setpoints on the EGFL "tri-set" models make user adjustments fast, sure and convenient
- **Compatible with Standard Equipment**—Application on single- and three-phase systems, ideal for use with shunt trip breakers, and magnetically isolated from monitored circuit and control power
- **Agency Approved**—UL and CE Certified, accepted worldwide

Standards and Certifications

- UL Approved
- UL 1053, Class 1 Recognized
- CE
- cULus

Listed

DANGER

THIS SENSOR IS NOT A SAFETY DEVICE AND IS NOT INTENDED TO BE USED AS A SAFETY DEVICE. This sensor is designed only to detect and read certain data in an electronic manner and perform no use apart from that, specifically no safety-related use. This sensor product does not include self-checking redundant circuitry, and the failure of this sensor product could cause either an energized or de-energized output condition, which could result in death, serious bodily injury, or property damage.

Product Selection

EGFL Series CurrentWatch Current Sensors

Mechanical Relay Sensors

Solid-Core Housing

Power Supply	Setpoint	Output Type	Contacts	Catalog Number
Solid-Core Housings				
120 Vac	Tri-set adjustable, 5, 10 or 30 mA	Mechanical relay, NO SPST relay, Form A	Latching relay	**EGFL1NOLAT3**
		Mechanical relay, NC SPST relay, Form B	Latching relay	**EGFL1NCLAT3**
		Mechanical relay, SPDT Form C, auto-reset	Normally energized	**EGFL1SPDTNET3**
			Normally de-energized	**EGFL1SPDTDET3**
24 Vac/dc	Tri-set adjustable, 5, 10 or 30 mA	Mechanical relay, NO SPST relay, Form A	Latching relay	**EGFL2NOLAT3**
		Mechanical relay, NC SPST relay, Form B	Latching relay	**EGFL2NCLAT3**
		Mechanical relay, SPDT Form C, auto-reset	Normally energized	**EGFL2SPDTNET3**
			Normally de-energized	**EGFL2SPDTDET3**

Technical Data and Specifications

EGFL Series CurrentWatch Current Sensors

Description	Specifications
Power supply	120 Vac (55–110% of nominal voltage) 24 Vac/dc (± 20%)
Output signal	Mechanical relay
Output rating	Auto reset models, SPDT relay: 1A at 125 Vac; 2A at 30 Vdc Latching models, SPST relay: 1A at 125 Vac; 2A at 30 Vdc
OFF-state leakage	None
Response time	200 ms at 5% above trip point 60 ms at 50% above trip point 15 ms at 500% above trip point
Frequency range	50–400 Hz (monitored circuit)
Loading	2VA max.
Isolation voltage	5000 Vac (tested)
Sensing aperture	1.83 in (46.5 mm) diameter
LED indicator	Green LED for power ON status Red LED for contact status
Housing	UL94 V0 flammability rated
Environmental	Operating temperature: –4° to +122°F (–20° to +50°C) Humidity: 0–95% RH, non-condensing

Output Tables

Protection from faults and control power loss.

Normally Energized Models

		Control Power Applied	
	No Power	**No Fault**	**Fault**
Normally open models	Open	Closed	Open
Normally closed models	Closed	Open	Closed

Normally De-Energized Models

		Control Power Applied	
	No Power	**No Fault**	**Fault**
Normally open models	Open	Open	Closed
Normally closed models	Closed	Closed	Open

Latching Models

Latching models power up initially in the rest (normal) mode. If there is a fault condition or the test button is pushed, the output contacts will change state and latch. The output will remain latched regardless of whether the fault is cleared or control power is removed. To reset the output, apply a momentary contact across "reset" terminals.

Wiring Diagrams

General Wiring Diagram for Ground Fault Sensors

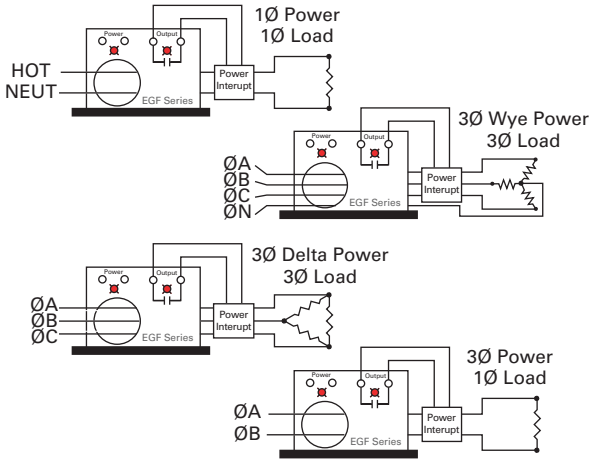

Latching Models

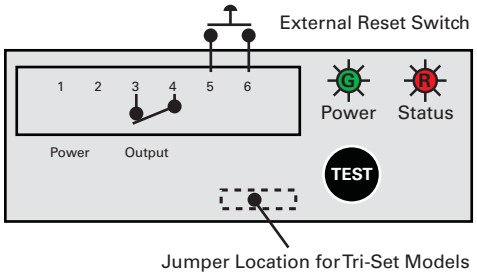

Auto Reset Models

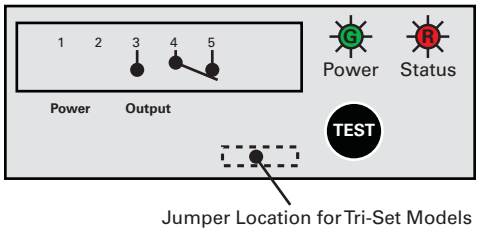

Dimensions

Approximate Dimensions in Inches (mm)
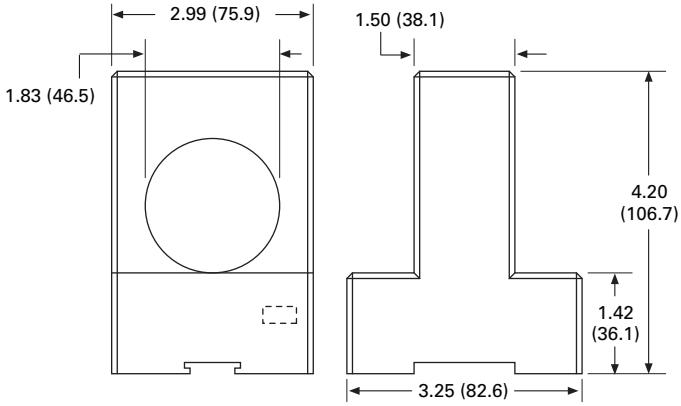
Mechanical Relay Models